V.7

ZIPPY TECHNOLOGY CORP.

Global Service
Headquarter
10F, No. 50,Minquan Rd., Xindian Dist., New Taipei City 231, TAIWAN
TEL : +886-2-2918-8512 FAX : +886-2-2913-4969
Power Division e-mail : powersales@zippy.com.tw
e-RMA: http://erma.zippy.com.tw
Open between 8:30 a.m. and 6:00 p.m. Local Time, Monday - Friday.

Germany
Zippy Technology Europe GmbH
Giesenheide 23, 40724 Hilden, Germany
TEL : +49-(0)2103-57601-00 FAX : +49-(0)2103-57601-29
e-mail : info@zippy-europe.com

USA West
Zippy USA Inc. (Pacific)
1 Morgan, Irvine CA 92618, USA
TEL : + 1-949-3669525 FAX : + 1-949-3669526
e-mail : powerusa@zippy.com

USA East
Zippy USA Inc. (Atlantic)
670 N. Beers Street, Bldg 2, Unit 6, Holmdel, NJ 07733 , USA
TEL : +1-732-203-6988 FAX : +1-732-203-6989
E-mail : powerusa@zippy.com

Canada
Canada Region
TEL : +1-877-809-4779 ext. 132

China
G-Brim International Inc. 巨曜贸易（深圳）有限公司
深圳市宝安区西乡街道后瑞社区新瑞工业区C栋5层
5F Building-C, Xinrui Industry Park Hourui Community, Xixiang Streect, Baoan District Shenzhen City 518128, China
TEL : +86-755-29778708-29778712 FAX : +86-755-29778713
e-mail : g-brim@zippy.com.tw

Beijing Representative Office巨曜贸易（深圳）有限公司·北京分公司
北京市海淀区上地三街9号嘉华大厦E504
E-504 Jiahua Building, No.9 Shangdi 3 St., Haidian District, Beijing, 100085, China
TEL : +86-010-82743850 FAX : +86-010-82743851
e-mail : g-brim@zippy.com.tw

SERVER GRADE POWER GUIDE BOOK V.7

ZIPPY TECHNOLOGY CORP.

Server Grade Power Guide Book

For the Future of Our Planet

EMACS

SERVER GRADE POWER

ZIPPY TECHNOLOGY CORP.

ZIPPY WORLDWIDE SERVICE

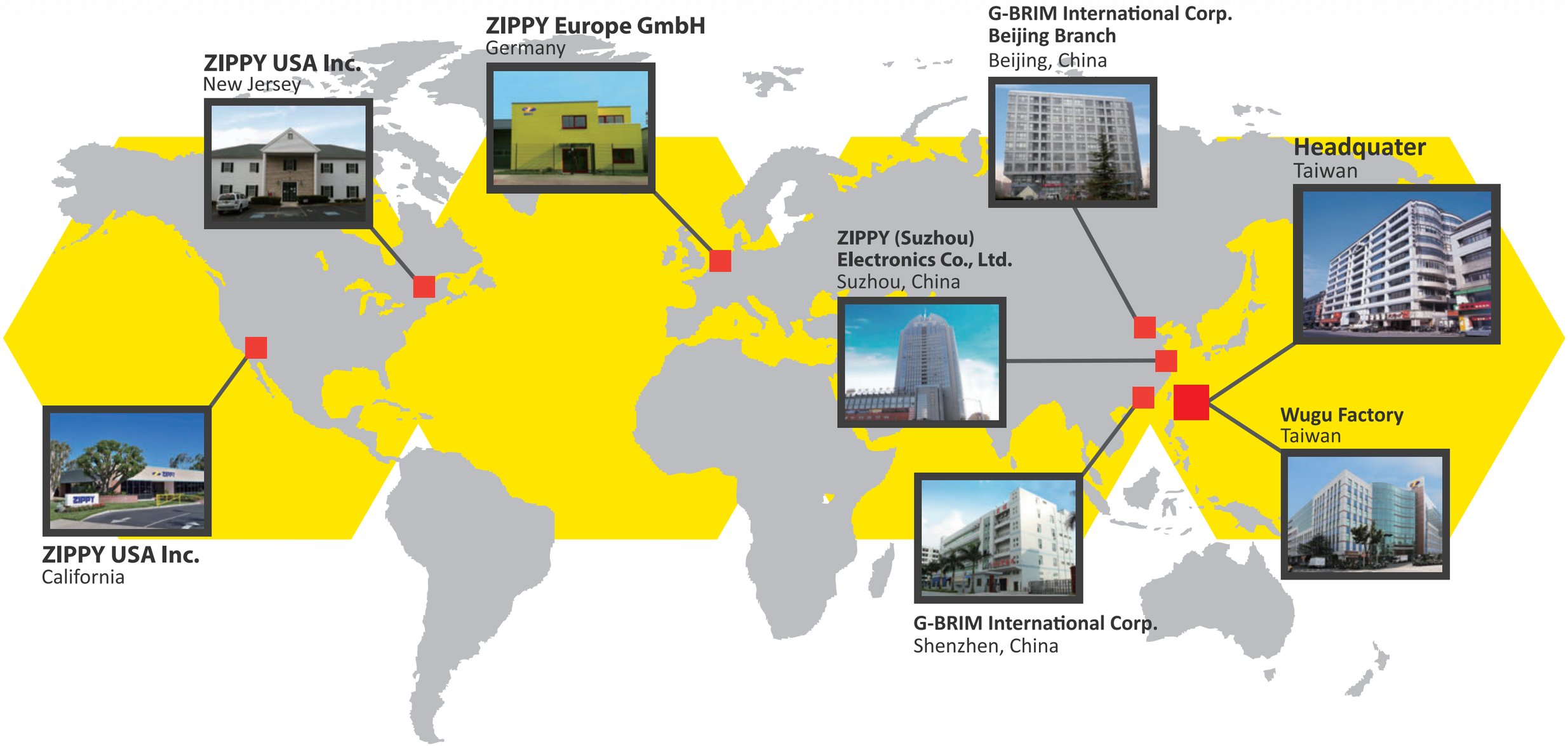

ZIPPY TECHNOLOGY CORP.

Profile

ZIPPY TECHNOLOGY CORPORATION, POWER DIVISION manufactures the well-known EMACS brand of high quality POWER SUPPLIES for file servers, industrial PC's (IPC), storage systems, workstations, blade servers, communications, and networking equipment. We are both an innovator in technology and design, creating high efficiency power supplies to substantially reduce energy costs. We continuously push ourselves to improve the functionality and the design of our power supplies for a more compact and higher output product.

Factory

Zippy has invested a tremendous amount of time and effort in our manufacturing facility and computerized testing equipment. Our goal is to develop the highest quality products and establish the most efficient manufacturing process all while reducing production costs and meeting the demands of an ever-changing market. Our flexible production schedule allows us to make various adjustments to accommodate our customer's most urgent needs. We have achieved this by integrating our production process into a company-wide network, which allows us to meet the requirements of our customers. Our factory is located in Taipei, Taiwan, with a capacity of approximately 100,000 units per month. Zippy Technology has always emphasized its flexibility, customization, and quality.

R&D

Our power division is particularly well known for manufacturing highly reliable and high-power redundant power supplies with outstanding quality. More than 30 professional engineers devote themselves to design and develop products with the latest equipment and testing tools. Our expertise and experience allow us to reduce the time to market for new designs, achieving lead times three to six months faster than our competitors.

CORE TECHNOLOGY

Passive Backplane Design
Many redundant systems utilize passive backplanes, where the components on the backplane perform monitoring and voltage compensation functions only. In the rare event of backplane failure, it is likely the supply will continue to operate.

Modular Technology
Modular power supply units provide great flexibility in dimensionally challenged applications, when designed into today's common and custom server chassis designs.

Load Sharing
Our redundant power supplies are all based on load sharing technology, which provide a more reliable operation and a longer life for each individual module.

True Wattage
Our power supplies are designed to work at 100% of their specified load, indefinitely, over their lifetime. Unlike other manufacturers who often specify peak wattage which is only available in short bursts.

Quality Control
Zippy has received EMACS' ISO-9001 Quality Certification in 1994. We strictly follow these guidelines in every aspect of our operation and also work hard to continuously improve our production system, bringing it in line with the highest of standards. We have dramatically reduced the occurrence of reworked and scrapped product as well as other production issues. All our products are tested and meet numerous international safety and EMI standards before shipping.

Our strict quality management begins with product design, through the development and onto service and support. Our goal is always to build the safest and the most reliable product with the best professional service available. This has allowed our brand name to become a synonym for Quality throughout the world.

ZIPPY TECHNOLOGY CORP.

E143756

CATEGORY SPECIFICATION

EMACS, is one of the leading server-grade SMPS manufacturers, we provide instant technical support response and full scale power supply solutions for servers, cloud computing, industrial computing and various applications.

ECO FRIENDLY

Enabling High Efficiency Power Solutions

As an industry leading provider of OEM/ODM high efficiency power supply solutions, Zippy manufactures a broad range of green solutions for the rapidly growing green market. No matter what your sustainable objectives are, you can count on us for energy efficient and recyclable solutions.

GO GREEN with us!

Quality Standard Certification and Compliances

1. IECQ QC080000 - Quality Assessment for Electronic Components (Electrical and Electronic Components and Products Hazardous Substance Free Standard and Requirements)
2. RoHS - 6/6 since March 2008

Our Initiatives

- High-Efficiency Power Supplies - 84%-86% efficient compared to industry average of 65% (Gold+ compliant design in progress)
- High-Efficiency VRM designs on backplane - 85%-93% compared to industry average of 70%-80%
- 6/6 RoHS - both EU and China standards
- Maximize Packaging recyclability - separate EPE foam and cardboard to minimize contaminations
- Fan speed control design - minimizes power consumption and noise from the fan

Cloud Power Series

Cloud computing technology ready.
Zippy announced cloud computing technology for some high efficiency PSU. This technology can monitor and control cloud computing power operations anywhere via the Internet.

Medical Power Series

Meets Medical Power Supply requirements UL , TUV , IEC 60601.
We are specialized in customized design so we could meet most updated medical application and standard quickly.

Micro Redundant Power Supply

Micro redundant Power Series also can be used in 1U chassis; moreover, it is also suitable for MINI ATX and 1U Servers.
Compact size with redundancy advantage.

True Redundant Power Supply

With over 20 years of design experience, EMACS Power Series delivers superior performance. Multiple outputs per module can withstand the most rigorous systems with unsurpassed reliability.

PMBus Solution

A smart option, to let you monitor power supply operating conditions through analog-to-digital interface.

Open Frame Power Supply

Silent and Fanless, Zippy (EMACS) Open Frame Solutions set a new industry standard in design and performance.

High Efficiency Power Supply

There are many 80 PLUS Certified Power Supply in our product lines are ready for your energy saving needs. Zippy is still in progress to develop new power-supplies with high-efficiency ratings.

Telecom Power Series

Telecom power series utilizes DC-DC power and it can be applied to all types of communications systems.

CERTIFICATE

ISO/TS 16949

ERP EN62075

ISO 9001

IECQ QC 08000

ISO 14001

EFFICIENCY

EMACS introduces a wide range of high efficiency power supplies, which will further our reputation for manufacturing superior quality power supplies and reduce energy costs. Most of our newly developed power supplies have now received 80PLUS certification. For further information, please contact your nearest ZIPPY Sales Representative.

115V

Model Number	Form Factor	Wattage	Rating
V2H-5435V	2U	435	Standard
V2H-5350V	2U	350	Standard
V2H-5400V	2U	400	Standard
P1D-5600V	ATX12V	600	Standard
P1D-5700V	ATX12V/ETX12V	700	Standard
PSM-5860V	ATX12V/EPS12V	860	Standard
HU2-5860V	ATX12V/EPS12V	860	Standard
V1E-5300V	EPS1U	300	Standard
V1E-5350V	EPS1U	350	Standard
HG2-5400V	ATX12V	400	Standard
GP2-5500V	ATX12V	500	Standard
HG2-5500V	ATX12V	500	Standard
HU2-5560V	ATX12V/EPS12V	560	Standard
P1H-5400V	EPS1U	400	Standard
P1S-5300V	EPS1U	300	Standard
P2G-5650V	EPS2U	650	Standard
P2G-5500V	EPS2U	500	Standard
P2H-5400V	EPS2U	400	Standard
P2M-5600V	EPS2U	600	Standard
P2M-5700V	EPS2U	700	Standard
P2M-5800V	EPS2U	800	Standard
H1U-5320V	EPS1U	320	Standard
P1S-6300V	1U	300	Standard
PSM-5760V	ATX12V/EPS12V	760	Bronze
PSM-5660V	ATX12V/EPS12V	660	Bronze
HU2-5760V	ATX12V/EPS12V	760	Bronze
V1E-5250V	EPS1U	250	Bronze
GP2-5600V	ATX12V	600	Bronze
HG2-5600V	ATX12V	600	Bronze
H1U-5300V	1U	300	Bronze
HU2-5660V	ATX12V/EPS12V	660	Bronze
P1H-5500V	EPS1U	500	Bronze
P1H-5550V	EPS1U	550	Bronze
P2G-5600V	EPS2U	600	Bronze
P2H-5550V	EPS2U	550	Bronze
P2H-5500V	EPS2U	500	Bronze
Y1U-5650V	ATX12V	650	Bronze
PSL-6A00V	ATX12V	1000	Bronze
H1M-5607V	EPS12V 1U	600	Bronze
H1M-5707V	EPS12V 1U	700	Bronze
PSL-6C00V	ATX12V	1200	Silver
P1H-5500G	1U	500	Gold
P2G-5600G	2U	600	Gold
P2G-5500G	2U	500	Gold
P1H-5420E	1U	420	Gold
P1H-5420G	1U	420	Gold
P1H-5500K	1U	500	Platinum
P1U-5520K	1U	520	Platinum

230V

Model Number	Form Factor		Wattage	Rating
MTW-5660V	1U	230V EU Internal	660	Standard
C2W-3620V-R	1U	230V Internal	620	Bronze
R1S-1120V	1U	230V Internal	120	Bronze
MRW-3500V-R	Custom		500	Bronze
M1Y-2152V	1U	230V Internal	150	Bronze
P1S-2400V	1U	230V Internal	400	Silver
GIN-3800V	1U	230V Internal	800	Silver
GIN-3600V	1U	230V Internal	600	Silver
GIN-3500V	1U	230V Internal	500	Silver
M1W-2810V	1U	230V Internal	810	Silver
G1W-3660V	1U	230V Internal	660	Silver
MRW-3600V-R	Custom		600	Silver
P1S-2500V	1U	230V Internal	500	Silver
M1P-2500V	1U	230V Internal	500	Silver
T1W-3A10V	1U	230V Internal	1010	Silver
G1W-3760V	1U	230V Internal	760	Silver
M1S-3501V	1U	230V Internal	500	Silver
KIN-2800V	1U	230V Internal	800	Gold
PSG-2A00V	1U	230V Internal	1000	Gold
PSS-2A00V	1U	230V Internal	1000	Gold
G1W-3960V	1U	230V Internal	960	Gold
G1W-3A10V	1U	230V Internal	1010	Gold
M1W-2A10V	1U	230V Internal	1010	Gold
M1W-2C00V	1U	230V Internal	1200	Gold
M1W-2E00V	1U	230V Internal	1400	Gold
C2W-3820V-R	1U	230V Internal	820	Gold
PSS-2E00V	1U	230V Internal	1400	Gold
PSS-2C00V	1U	230V Internal	1200	Gold
M1W-2600G	1U	230V Internal	600	Gold
M1W-2650G	1U	230V Internal	650	Gold
M1W-2700G	1U	230V Internal	700	Gold
M1K-2C00V	1U	230V Internal	1200	Gold
M1U-2750V	1U	230V Internal	750	Gold
MRT-2320G-R	Custom		320	Gold
MRT-2450G-R	Custom		450	Gold
MRW-3600G-R	Custom		600	Gold
G1W-3762V	1U	230V Internal	760	Gold
G1W-3862V	1U	230V Internal	860	Gold
M1Y-2302G	1U	230V Internal	300	Gold
M1Y-2222G	1U	230V Internal	220	Gold
M1W-2700K	1U	230V Internal	700	Platinum
P1P-2600K	1U	230V Internal	600	Platinum
Q1N-2400K	1U	230V Internal	400	Platinum
M1R-2500G	1U	230V Internal	500	Platinum
M1Y-2302K	1U	230V Internal	300	Platinum
M1D-2500G	1U	230V Internal	500	Platinum
M1D-2800V	1U	230V Internal	800	Platinum

Power index

How to use this guide book

01

Use the simplified index from **Page 10** to find the desirable form factor, wattage and dimensions. Then follow the page number indicated to check the specification details.

02

If you do not find what you are looking for from the simplified index, please turn to **Page 190** where you will find a detailed index from **Page 190-197**. If you are already our client and need a replacement for a redundant module, please turn to **Page 200** <Module Details> for the relevant information.

03

Alternatively you can either visit our website **www.zippy.com** to look for your desired power supply, or email us your enquiry via **powersales@zippy.com.tw** We welcome any feedback or advice on our products or guidebook, which you can share with us by email.

FORM FACTOR	MODEL NAME	WATTAGE	INPUT	D (mm/inch)	W (mm/inch)	H (mm/inch)	Page
1U	MQ1G-1035V-40	35W	AC90-240V	101.6 / 4	50.8 / 2	30 / 1.18	18
1U	MQ1G-1050V-5	50W	AC90-240V	101.6 / 4	50.8 / 2	30 / 1.18	19
1U	MQ1G-1060V-12	60W	AC90-240V	101.6 / 4	50.8 / 2	30 / 1.18	20
1U	MQ1G-1060V-24	60W	AC90-240V	101.6 / 4	50.8 / 2	30 / 1.18	20
1U	MQ1G-1060V-40	60W	AC90-240V	101.6 / 4	50.8 / 2	30 / 1.18	20
1U	MQ1G-1060V-48	60W	AC90-240V	101.6 / 4	50.8 / 2	30 / 1.18	20
1U	MQ1D-5120V	120W	PFC	190 / 7.48	83.8 / 3.3	40 / 1.57	21
Mini 1U	MP1S-5220V	220W	PFC	190 / 7.48	81.5 / 3.21	40.3 / 1.59	22
Mini 1U	MP1S-5300V	300W	PFC	190 / 7.48	81.5 / 3.21	40.3 / 1.59	22
Mini 1U	MP1S-6400V	400W	PFC	250 / 9.84	81.5 / 3.21	40.3 / 1.59	23
1U	MV1E-5350V	350W	PFC	260 / 10.24	100 / 3.94	40.5 / 1.59	24
2U	MP2M-5435V	435W	PFC	270 / 10.63	100 / 3.94	70 / 2.76	25
PS2	MHG2-6300P	300W	PFC	140 / 5.51	150 / 5.91	86 / 3.39	26
PS2	MHG2-6350P	350W	PFC	140 / 5.51	150 / 5.91	86 / 3.39	26
PS2	MHG2-6400P	400W	PFC	140 / 5.51	150 / 5.91	86 / 3.39	26
PS2	MHU2-5400V	400W	PFC	140 / 5.51	150 / 5.91	86 / 3.39	27
PS2	MPSM-5500V	500W	PFC	160 / 6.3	150 / 5.91	86 / 3.39	28
PS2	MPSM-5600V	600W	PFC	160 / 6.3	150 / 5.91	86 / 3.39	28
1U	Q1P-1052V19	50W	AC90-240V	94.5 / 3.72	39.5 / 1.56	32 / 1.26	29
1U	Q1L-5060V	60W	AC90-240V	176 / 6.93	39 / 1.54	39 / 1.54	30
1U	Q1J-1050V-5	50W	AC90-240V	103 / 4.06	52 / 2.05	39 / 1.54	31
1U	Q1J-1060V-12	60W	AC90-240V	103 / 4.06	52 / 2.05	39 / 1.54	31
1U	Q1J-1060V-24	60W	AC90-240V	103 / 4.06	52 / 2.05	39 / 1.54	31
1U	Q1J-1060V-48	60W	AC90-240V	103 / 4.06	52 / 2.05	39 / 1.54	31
1U	Q1I-1060V12	60W	AC90-240V	114.5 / 4.51	50.8 / 2	38 / 1.5	32
1U	Q1I-2050V53	50W	AC90-240V	114.5 / 4.51	50.8 / 2	38 / 1.5	32
1U	Q1I-2060V123	60W	AC90-240V	114.5 / 4.51	50.8 / 2	38 / 1.5	32
1U	Q1I-2060V125	60W	AC90-240V	114.5 / 4.51	50.8 / 2	38 / 1.5	32
1U	Q1H-5060V	60W	AC90-240V	126 / 4.96	55 / 2.17	39 / 1.54	33
1U	Q1Q-1060V12	60W	AC90-240V	137 / 5.4	50 / 1.97	32 / 1.26	34
1U	Q1O-1060V12	60W	AC90-240V	127.5 / 5.02	56 / 2.2	32 / 1.26	35
1U	Q1F-1150V12	150W	PFC	125 / 4.92	76.2 / 3	39 / 1.54	36
1U	Q1F-1150V24	150W	PFC	125 / 4.92	76.2 / 3	39 / 1.54	36
1U	Q1F-1150V48	150W	PFC	125 / 4.92	76.2 / 3	39 / 1.54	36
1U	Q1F-2150V123	150W	PFC	125 / 4.92	76.2 / 3	39 / 1.54	37
1U	Q1F-2150V125	150W	PFC	125 / 4.92	76.2 / 3	39 / 1.54	37
1U	Q1F-3150V	150W	PFC	127 / 5	76.2 / 3	39 / 1.54	38
1U	Q1D-5120V	120W	PFC	165 / 6.5	83.8 / 3.3	39 / 1.54	39
1U	Q1K-5150V	150W	PFC	186 / 7.32	100 / 3.94	39.5 / 1.56	40
1U	Q1K-5200V	200W	PFC	186 / 7.32	100 / 3.94	39.5 / 1.56	40
1U	Q1N-2400K	400W	PFC	199 / 7.83	92 / 3.62	43 / 1.69	41
1U	Q1N-3400K	400W	PFC	199 / 7.83	92 / 3.62	43 / 1.69	41

FORM FACTOR	MODEL NAME	WATTAGE	INPUT	D (mm/inch)	W (mm/inch)	H (mm/inch)	Page
1U	Q1S-1150V12	150W	PFC	127 / 5	76.2 / 3	39.6 / 1.56	42
1U	Q1S-1150V24	150W	PFC	127 / 5	76.2 / 3	39.6 / 1.56	42
1U	Q1S-1150V48	150W	PFC	127 / 5	76.2 / 3	39.6 / 1.56	42
1U Module	G1X-1060V12	60W	PFC	135 / 5.31	50.5 / 1.99	38 / 1.5	43
1U Redundant	G1X2-1060V12	60W	PFC	190 / 7.48	106 / 4.17	39.5 / 1.56	44
1U Redundant	G1X2-5060V	60W	PFC	190 / 7.48	106 / 4.17	39.5 / 1.56	45
1U Redundant	DG1X-1060V12	60W	PFC	135 / 5.31	50.5 / 1.99	38 / 1.5	46
1U Redundant	DG1X2-1060V12	60W	PFC	190 / 7.48	106 / 4.17	39.5 / 1.56	47
1U Redundant	DG1X2-5060V	60W	PFC	190 / 7.48	106 / 4.17	39.5 / 1.56	48
1U Redundant	RH1E-1060V	60W	PFC	147 / 5.79	96 / 3.78	36 / 1.42	49
DC 1U	AN1U-5150V	150W	DC 12V	40.5 / 1.59	100 / 3.94	20.6 / 0.81	50
DC 1U	AN1P-5400V	400W	DC 12V	70 / 2.76	81.5 / 3.21	40 / 1.57	51
DC 1U	AB1U-5120V	120W	DC10~36V	152 / 5.98	83.8 / 3.3	38 / 1.5	52
DC 1U	BB1U-6150V	150W	DC18~36V	152 / 5.98	83.8 / 3.3	38 / 1.5	53
Mini 1U	P1S-5300G	300W	PFC	150 / 5.91	81.5 / 3.21	40.3 / 1.59	54
Mini 1U	P1S-2300V19	300W	PFC	150 / 5.91	81.5 / 3.21	40.3 / 1.59	55
Mini 1U	P1S-2300V	300W	PFC	150 / 5.91	81.5 / 3.21	40.3 / 1.59	56
Mini 1U	P1S-2400V	400W	PFC	150 / 5.91	81.5 / 3.21	40.3 / 1.59	56
Mini 1U	P1S-2500V	500W	PFC	150 / 5.91	81.5 / 3.21	40.3 / 1.59	56
Mini 1U	P1P-5400V	400W	PFC	170 / 6.69	81.5 / 3.21	40.3 / 1.59	57
Mini 1U	P1P-5401V	400W	PFC	170 / 6.69	81.5 / 3.21	40.3 / 1.59	57
Mini 1U	P1P-2600K	600W	PFC	170 / 6.69	81.5 / 3.21	40.3 / 1.59	58
Mini 1U	P1P-2600G	600W	PFC	170 / 6.69	81.5 / 3.21	40.3 / 1.59	59
Mini 1U	P1P-2600K	600W	PFC	170 / 6.69	81.5 / 3.21	40.3 / 1.59	59
1U	H1U-5300V	300W	PFC	155 / 6.1	100 / 3.94	40 / 1.57	60
1U	H1U-5320V	320W	PFC	155 / 6.1	100 / 3.94	40 / 1.57	60
1U	P1U-5400E	400W	PFC	190 / 7.48	100 / 3.94	40 / 1.57	61
1U	P1U-5520K	520W	PFC	190 / 7.48	100 / 3.94	40 / 1.57	62
1U	P1H-5400V	400W	PFC	225 / 8.86	100 / 3.94	40.5 / 1.59	63
1U	P1H-5500V	500W	PFC	225 / 8.86	100 / 3.94	40.5 / 1.59	63
1U	P1H-5550V	550W	PFC	225 / 8.86	100 / 3.94	40.5 / 1.59	63
1U	P1H-5501V	500W	PFC	225 / 8.86	100 / 3.94	40.5 / 1.59	63
1U	P1H-5551V	550W	PFC	225 / 8.86	100 / 3.94	40.5 / 1.59	63
1U	P1H-5407V	400W	PFC	225 / 8.86	100 / 3.94	40.5 / 1.59	64
1U	P1H-5507V	500W	PFC	225 / 8.86	100 / 3.94	40.5 / 1.59	64
1U	P1H-5557V	550W	PFC	225 / 8.86	100 / 3.94	40.5 / 1.59	64
1U	P1H-5420G	420W	PFC	225 / 8.86	100 / 3.94	40.5 / 1.59	65
1U	P1H-5500G	500W	PFC	225 / 8.86	100 / 3.94	40.5 / 1.59	65
1U	P1H-5420E	420W	PFC	225 / 8.86	100 / 3.94	40.5 / 1.59	66
1U	P1H-5500E	500W	PFC	225 / 8.86	100 / 3.94	40.5 / 1.59	66
1U	V1E-5250V	250W	PFC	210 / 8.27	100 / 3.94	40.5 / 1.59	67
1U	V1E-5300V	300W	PFC	210 / 8.27	100 / 3.94	40.5 / 1.59	67

FORM FACTOR	MODEL NAME	WATTAGE	INPUT	D (mm/inch)	W (mm/inch)	H (mm/inch)	Page
1U	V1E-5350V	350W	PFC	210 / 8.27	100 / 3.94	40.5 / 1.59	67
1U	H1M-5350V	350W	PFC	242 / 9.53	100 / 3.94	40.5 / 1.59	68
1U	H1M-5600V	600W	PFC	250 / 9.84	100 / 3.94	40.5 / 1.59	69
1U	H1M-5700V	700W	PFC	250 / 9.84	100 / 3.94	40.5 / 1.59	69
1U	H1M-5800V	800W	PFC	250 / 9.84	100 / 3.94	40.5 / 1.59	69
1U	H1M-5607V	600W	PFC	275 / 10.83	100 / 3.94	40.5 / 1.59	70
1U	H1M-5707V	700W	PFC	275 / 10.83	100 / 3.94	40.5 / 1.59	70
1U	H1M-5807V	800W	PFC	275 / 10.83	100 / 3.94	40.5 / 1.59	70
1U	P1D-5400V	400W	PFC	300 / 11.81	100 / 3.94	40.5 / 1.59	71
1U	P1D-5600V	600W	PFC	300 / 11.81	100 / 3.94	40.5 / 1.59	71
1U	P1D-5700V	700W	PFC	300 / 11.81	100 / 3.94	40.5 / 1.59	71
1U	P1D-3940V	940W	PFC	300 / 11.81	100 / 3.94	40.5 / 1.59	72
1U	H1W-5AD0V	1400W	PFC	295 / 11.61	100 / 3.94	40 / 1.57	73
2U	P2H-5400V	400W	PFC	215 / 8.46	100 / 3.94	70 / 2.76	74
2U	P2H-5500V	500W	PFC	215 / 8.46	100 / 3.94	70 / 2.76	74
2U	P2H-5550V	550W	PFC	215 / 8.46	100 / 3.94	70 / 2.76	74
2U	P2H-5501V	500W	PFC	215 / 8.46	100 / 3.94	70 / 2.76	74
2U	P2G-5500G	500W	PFC	240 / 9.45	100/3.94	70/2.76	75
2U	P2G-5600G	600W	PFC	240 / 9.45	100/3.94	70/2.76	75
2U	P2G-5650G	650W	PFC	240 / 9.45	100/3.94	70/2.76	75
2U	P2M-5600V	600W	PFC	280 / 11.02	100 / 3.94	70 / 2.76	76
2U	P2M-5700V	700W	PFC	280 / 11.02	100 / 3.94	70 / 2.76	76
2U	P2M-5800V	800W	PFC	280 / 11.02	100 / 3.94	70 / 2.76	76
PS2	HG2-5400V	400W	PFC	140 / 5.51	150 / 5.91	86 / 3.39	77
PS2	HG2-5500V	500W	PFC	140 / 5.51	150 / 5.91	86 / 3.39	77
PS2	HG2-5600V	600W	PFC	140 / 5.51	150 / 5.91	86 / 3.39	77
PS2	HG2-5400E	400W	PFC	140 / 5.51	150 / 5.91	86 / 3.39	78
PS2	HG2-5500E	500W	PFC	140 / 5.51	150 / 5.91	86 / 3.39	78
PS2	HG2-5600E	600W	PFC	140 / 5.51	150 / 5.91	86 / 3.39	78
PS2	HU2-5560V	560W	PFC	140 / 5.51	150 / 5.91	86 / 3.39	79
PS2	HU2-5660V	660W	PFC	140 / 5.51	150 / 5.91	86 / 3.39	79
PS2	HU2-5760V	760W	PFC	140 / 5.51	150 / 5.91	86 / 3.39	79
PS2	HU2-5860V	860W	PFC	140 / 5.51	150 / 5.91	86 / 3.39	79
PS2+	PSM-5660V	660W	PFC	160 / 6.3	150 / 5.91	86 / 3.39	80
PS2+	PSM-5760V	760W	PFC	160 / 6.3	150 / 5.91	86 / 3.39	80
PS2+	PSM-5860V	860W	PFC	160 / 6.3	150 / 5.91	86 / 3.39	80
PS2+	PSL-6A00V	1000W	PFC	220 / 8.66	150 / 5.91	86 / 3.39	81
PS2+	PSL-6C00V	1200W	PFC	220 / 8.66	150 / 5.91	86 / 3.39	81
Micro Redundant	R1T2-5120V0H	120W	PFC	215 / 8.46	106 / 4.17	41.5 / 1.63	82
Micro Redundant	R1T2-5120VFH	120W	PFC	215 / 8.46	106 / 4.17	41.5 / 1.63	83
Micro Redundant	R1U2-5220V4H	220W	PFC	260 / 10.24	106 / 4.17	41.3 / 1.63	84
Micro Redundant	R1V2-5275V4H	275W	PFC	295 / 11.61	106 / 4.17	41.3 / 1.63	85

FORM FACTOR	MODEL NAME	WATTAGE	INPUT	D (mm/inch)	W (mm/inch)	H (mm/inch)	Page
Micro Redundant	M1Y2-5300G2H	300W	PFC	275 / 10.83	106 / 4.17	41.3 / 1.63	86
Micro Redundant	M1Y2-5300K2H	300W	PFC	275 / 10.83	106 / 4.17	41.3 / 1.63	86
Micro Redundant	M1R2-5300V0H	300W	PFC	295 / 11.61	106 / 4.17	41.3 / 1.63	87
Micro Redundant	M1R2-5400V0H	400W	PFC	295 / 11.61	106 / 4.17	41.3 / 1.63	87
Micro Redundant	M1R2-5500G0H	500W	PFC	295 / 11.61	106 / 4.17	41.3 / 1.63	88
Micro Redundant	M1S2-5600G2H	600W	PFC	355 / 13.98	106 / 4.17	41.3 / 1.63	89
Micro Redundant	M1V2-5800V4H	800W	PFC	355 / 13.98	106 / 4.17	41.3 / 1.63	90
Micro Redundant	M1V2-5801V4H	800W	PFC	355 / 13.98	106 / 4.17	41.3 / 1.63	90
Micro Redundant	M1U2-5650V4H	650W	PFC	355 / 13.98	106 / 4.17	41.3 / 1.63	91
Micro Redundant	M1U2-5750V4H	750W	PFC	355 / 13.98	106 / 4.17	41.3 / 1.63	91
Micro Redundant	M1U2-5651V4H	650W	PFC	355 / 13.98	106 / 4.17	41.3 / 1.63	91
Micro Redundant	M1U2-5751V4H	750W	PFC	355 / 13.98	106 / 4.17	41.3 / 1.63	91
Micro Redundant	M1K2-5A00V4H	1000W	PFC	400 / 15.75	106 / 4.17	41.3 / 1.63	92
Micro Redundant	M1K2-5C00V4H	1200W	PFC	400 / 15.75	106 / 4.17	41.3 / 1.63	92
Micro Redundant	M1K2-5A01V4H	1000W	PFC	400 / 15.75	106 / 4.17	41.3 / 1.63	92
Micro Redundant	M1K2-5C01V4H	1200W	PFC	400 / 15.75	106 / 4.17	41.3 / 1.63	92
1U Redundant	M1P2-5300V4H	300W	PFC	230 / 9.06	176 / 6.93	41.8 / 1.65	93
1U Redundant	M1P2-5420V4H	420W	PFC	230 / 9.06	176 / 6.93	41.8 / 1.65	93
1U Redundant	M1P2-5500V4H	500W	PFC	230 / 9.06	176 / 6.93	41.8 / 1.65	93
1U Redundant	R1S2-5120V0H	120W	PFC	150 / 5.91	176 / 6.93	41.8 / 1.65	94
1U Redundant	R1S2-5180V4H	180W	PFC	230 / 9.06	176 / 6.93	41.8 / 1.65	95
1U Redundant	R1S2-5300V4H	300W	PFC	230 / 9.06	176 / 6.93	41.8 / 1.65	95
1U Redundant	R1S2-5380V4H	380W	PFC	230 / 9.06	176 / 6.93	41.8 / 1.65	95
1U Redundant	G1W2-5760V3H	760W	PFC	330 / 12.99	206 / 8.11	41.5 / 1.63	96
1U Redundant	RP1U-5240V	240W	PFC	270 / 10.63	100 / 3.94	40.5 / 1.59	97
2U Redundant	M1V2-5800V4V	800W	PFC	400 / 15.75	54.5 / 2.15	84.6 / 3.33	98
2U Redundant	M1V2-5801V4V	800W	PFC	400 / 15.75	54.5 / 2.15	84.6 / 3.33	98
2U Redundant	M1V2-5807V4D	800W	PFC	450 / 17.72	54.5 / 2.15	84.6 / 3.33	99
2U Redundant	M1V2-5807V4D	800W	PFC	450 / 17.72	54.5 / 2.15	84.6 / 3.33	99
2U Redundant	M1U2-5650V4V	650W	PFC	400 / 15.75	54.5 / 2.15	84.6 / 3.33	100
2U Redundant	M1U2-5750V4V	750W	PFC	400 / 15.75	54.5 / 2.15	84.6 / 3.33	100
2U Redundant	M1U2-5651V4V	650W	PFC	400 / 15.75	54.5 / 2.15	84.6 / 3.33	100
2U Redundant	M1U2-5751V4V	750W	PFC	400 / 15.75	54.5 / 2.15	84.6 / 3.33	100
2U Redundant	M1K2-5A00V4V	1000W	PFC	425 / 16.73	54.5 / 2.15	84.6 / 3.33	101
2U Redundant	M1K2-5C00V4V	1200W	PFC	425 / 16.73	54.5 / 2.15	84.6 / 3.33	101
2U Redundant	M1K2-5A01V4V	1000W	PFC	425 / 16.73	54.5 / 2.15	84.6 / 3.33	101
2U Redundant	M1K2-5C01V4V	1200W	PFC	425 / 16.73	54.5 / 2.15	84.6 / 3.33	101
2U Redundant	M1K2-2C00V4D	1200W	PFC	450 / 17.72	54.5 / 2.15	84.6 / 3.33	102
2U Redundant	M1K2-2C00V4Q	1200W	PFC	450 / 19.69	54.5 / 2.15	84.6 / 3.33	103
2U Redundant	M1H2-5AD0V0V	1400W	PFC	442 / 17.4	54.5 / 2.15	84.6 / 3.33	104
2U Redundant	M1K2-2A07V4D	1000W	PFC	485 / 19.69	54.5 / 2.15	84.6 / 3.33	105
2U Redundant	PSS2-5A00V3V	1000W	PFC	385 / 15.16	65 / 2.56	84 / 3.31	106

FORM FACTOR	MODEL NAME	WATTAGE	INPUT	D (mm/inch)	W (mm/inch)	H (mm/inch)	Page
2U Redundant	R1S2-5120V0V	120W	PFC	150 / 5.91	85 / 3.35	84 / 3.31	107
2U Redundant	R1S2-5300V4V	300W	PFC	207 / 8.15	85 / 3.35	84 / 3.31	108
2U Redundant	R1S2-5380V4V	380W	PFC	207 / 8.15	85 / 3.35	84 / 3.31	108
2U Redundant	R1S2-5507V4V	500W	PFC	217 / 8.54	85 / 3.35	84 / 3.31	109
2U Redundant	M1P2-5300V4V	300W	PFC	217 / 8.54	85 / 3.35	84 / 3.31	110
2U Redundant	M1P2-5420V4V	420W	PFC	217 / 8.54	85 / 3.35	84 / 3.31	110
2U Redundant	M1P2-5500V4V	500W	PFC	217 / 8.54	85 / 3.35	84 / 3.31	110
2U Redundant	M1D2-5300V0V	300W	PFC	170 / 6.69	101.2 / 3.98	84 / 3.31	111
2U Redundant	M1D2-5400V0V	400W	PFC	170 / 6.69	101.2 / 3.98	84 / 3.31	111
2U Redundant	M1D2-5500G0V	500W	PFC	170 / 6.69	101.2 / 3.98	84 / 3.31	111
2U Redundant	M1D2-5600V0V	600W	PFC	200 / 7.87	101.2 / 3.98	84 / 3.31	112
2U Redundant	M1D2-5700V0V	700W	PFC	200 / 7.87	101.2 / 3.98	84 / 3.31	112
2U Redundant	M1D2-5800V0V	800W	PFC	200 / 7.87	101.2 / 3.98	84 / 3.31	112
2U Redundant	M1W2-5600G0V	600W	PFC	300 / 11.81	101.2 / 3.98	84 / 3.31	113
2U Redundant	M1W2-5700G0V	700W	PFC	300 / 11.81	101.2 / 3.98	84 / 3.31	113
2U Redundant	M1W2-5700K0V	700W	PFC	300 / 11.81	101.2 / 3.98	84 / 3.31	114
2U Redundant	M1W2-5810V3V	810W	PFC	300 / 11.81	101.2 / 3.98	84 / 3.31	115
2U Redundant	M1W2-5910V3V	910W	PFC	300 / 11.81	101.2 / 3.98	84 / 3.31	115
2U Redundant	M1W2-5A10V3V	1010W	PFC	300 / 11.81	101.2 / 3.98	84 / 3.31	115
2U Redundant	M1W2-5E00V3V	1400W	PFC	300 / 11.81	101.2 / 3.98	84 / 3.31	115
2U Redundant	M1W2-5E01V3V	1400W	PFC	300 / 11.81	101.2 / 3.98	84 / 3.31	115
2U Redundant	M1W2-5911V3V	910W	PFC	320 / 11.27	101.2 / 3.98	84 / 3.31	116
2U Redundant	M1W2-7AG0V0V	1700W	PFC	330 / 12.2	101.2 / 3.98	84 / 3.31	117
2U Redundant	G1W2-5660V3V	660W	PFC	300 / 11.81	101.2 / 3.98	84 / 3.31	118
2U Redundant	G1W2-5760V3V	760W	PFC	300 / 11.81	101.2 / 3.98	84 / 3.31	118
2U Redundant	G1W2-5860V3V	860W	PFC	300 / 11.81	101.2 / 3.98	84 / 3.31	118
2U Redundant	G1W2-5960V3V	960W	PFC	300 / 11.81	101.2 / 3.98	84 / 3.31	118
2U Redundant	G1W2-5760V2V	760W	PFC	300 / 11.81	101.2 / 3.98	84 / 3.31	119
2U Redundant	G1W2-5860V2V	860W	PFC	300 / 11.81	101.2 / 3.98	84 / 3.31	119
2U Redundant	G1W2-5A10V2V	1010W	PFC	300 / 11.81	101.2 / 3.98	84 / 3.31	119
2U Redundant	G1W2-5C00V2V	1200W	PFC	300 / 11.81	101.2 / 3.98	84 / 3.31	119
2U Redundant	G1W2-5A10V3V	1010W	PFC	300 / 11.81	101.2 / 3.98	84 / 3.31	120
2U Redundant	G1W2-5C00V3V	1200W	PFC	300 / 11.81	101.2 / 3.98	84 / 3.31	120
2U Redundant	G1W2-5AE0G2V	1500W	PFC	300 / 11.81	101 / 3.98	84 / 3.31	121
2U Redundant	MTW2-5960V2V	960W	PFC	300 / 11.81	101 / 3.98	84 / 3.31	122
2U Redundant	MTW2-5AD0B2V	1400W	PFC	300 / 11.81	101 / 3.98	84 / 3.31	123
2U Redundant	R2K-5800V	800W	PFC	340 / 13.39	101 / 3.98	82 / 3.23	124
2U Redundant	R2K-5A00V	1000W	AC 240V	340 / 13.39	101 / 3.98	82 / 3.23	124
2U Redundant	R2K-5C00V	1200W	PFC	340 / 13.39	101 / 3.98	82 / 3.23	124
2U Redundant	R2K-5800V4D	800W	PFC	397 / 15.63	101 / 3.98	82 / 3.23	125
2U Redundant	PRP-5560G0V	560W	PFC	217 / 8.54	85 / 3.35	84 / 3.31	126
2U Redundant	S1Z2-5800K2V	800W	PFC	240 / 9.45	85 / 3.35	83 / 3.27	127

FORM FACTOR	MODEL NAME	WATTAGE	INPUT	D (mm/inch)	W (mm/inch)	H (mm/inch)	Page
2U Redundant	S1Z2-5700K2V	700W	PFC	240 / 9.45	85 / 3.35	83 / 3.27	127
2U Redundant	S1Z2-5600K2V	600W	PFC	240 / 9.45	85 / 3.35	83 / 3.27	127
Mini Redundant	MRT-5320G0V	320W	PFC	185 / 7.28	150 / 5.91	86 / 3.39	128
Mini Redundant	MRT-5450G0V	450W	PFC	185 / 7.28	150 / 5.91	86 / 3.39	128
Mini Redundant	MRW-5450V4V	450W	PFC	185 / 7.28	150 / 5.91	86 / 3.39	128
Mini Redundant	MRW-5500V4V	500W	PFC	185 / 7.28	150 / 5.91	86 / 3.39	129
Mini Redundant	MRW-5600V4V	600W	PFC	185 / 7.28	150 / 5.91	86 / 3.39	129
Mini Redundant	MRG-5700V4V	700W	PFC	200 / 7.87	150 / 5.91	86 / 3.39	130
Mini Redundant	MRG-5800V4V	800W	PFC	200 / 7.87	150 / 5.91	86 / 3.39	130
Mini Redundant	MRH2-5930V0H	930W	PFC	280 / 11.02	150 / 5.91	86 / 3.39	131
Mini Redundant	MRH2-5AD0V0H	1400W	PFC	280 / 11.02	150 / 5.91	86 / 3.39	131
N + 1 Redundant	M1Z3-5950V3V	950W	PFC	265 / 10.43	101.2 / 3.98	125 / 4.92	132
N + 1 Redundant	M1Z3-5A45V3V	1045W	PFC	265 / 10.43	101.2 / 3.98	125 / 4.92	132
N + 1 Redundant	M1Z3-5950V3H	950W	PFC	310 / 12.2	331 / 13.03	43 / 1.69	133
N + 1 Redundant	MTW3-5C50V3V	1250W	PFC	300 / 11.81	101 / 3.98	125 / 4.92	134
N + 1 Redundant	MTW3-5H00V3V	1700W	PFC	300 / 11.81	101 / 3.98	125 / 4.92	134
N + 1 Redundant	MTW4-5H80V3V	1780W	PFC	300 / 11.81	101.2 / 3.98	166 / 6.54	135
N + 1 Redundant	R3G-5500V4V	500W	PFC	276 / 10.87	83 / 3.27	127 / 5	136
N + 1 Redundant	R3G-5800V4V	800W	PFC	276 / 10.87	83 / 3.27	127 / 5	136
N + 1 Redundant	R3G-5950V4V	950W	PFC	276 / 10.87	83 / 3.27	127 / 5	136
N + 1 Redundant	R3G-5B40V4V	1140W	PFC	276 / 10.87	83 / 3.27	127 / 5	136
N + 1 Redundant	SPH2-5A00V4H	1000W	PFC	404 / 15.91	127 / 5	49 / 1.93	137
N + 1 Redundant	SPH2-5C00V4H	1200W	PFC	404 / 15.91	127 / 5	49 / 1.93	137
N + 1 Redundant	M1P4-6950V4H	950W	PFC	260 / 10.24	359 / 14.13	41.8 / 1.65	138
N + 1 Redundant	M1P4-6D50V4H	1350W	PFC	260 / 10.24	359 / 14.13	41.8 / 1.65	138
N + 1 Redundant	M1Z4-5A80V3H	1080W	PFC	310 / 12.2	422 / 16.61	43 / 1.69	139
N + 1 Redundant	M1Z4-5C40V3H	1240W	PFC	310 / 12.2	422 / 16.61	43 / 1.69	139
N + 1 Redundant	M1Z4-5D50V3H	1350W	PFC	310 / 12.2	422 / 16.61	43 / 1.69	139
N + 1 Redundant	M1Z4-5E85V3H	1485W	PFC	310 / 12.2	422 / 16.61	43 / 1.69	139
N + 1 Redundant	M1W4-5L80V3H	2180W	PFC	340 / 13.39	422 / 16.61	43 / 1.69	140
N + 1 Redundant	M1W4-5O50V3H	2450W	PFC	340 / 13.39	422 / 16.61	43 / 1.69	140
N + 1 Redundant	M1W4-5R20V3H	2720W	PFC	340 / 13.39	422 / 16.61	43 / 1.69	140
N + 1 Redundant	M1W4-5W40V3H	3240W	PFC	340 / 13.39	422 / 16.61	43 / 1.69	140
N + 1 Redundant	M1W4-5CH0V0H	3300W	PFC	340 / 13.39	422 / 16.61	43 / 1.69	140
N + 1 Redundant	MTW4-5C50V3H	1250W	PFC	340 / 13.39	422 / 16.61	43 / 1.69	141
N + 1 Redundant	MTW4-5F50V3H	1550W	PFC	340 / 13.39	422 / 16.61	43 / 1.69	141
N + 1 Redundant	MTW4-5H10V3H	1710W	PFC	340 / 13.39	422 / 16.61	43 / 1.69	141
N + 1 Redundant	MTW4-5H80V3H	1780W	PFC	340 / 13.39	422 / 16.61	43 / 1.69	141
N + 1 Redundant	MTW4-5K50V3H	2050W	PFC	340 / 13.39	422 / 16.61	43 / 1.69	141
N + 1 Redundant	MTW4-5M10V3H	2210W	PFC	340 / 13.39	422 / 16.61	43 / 1.69	141
N + 1 Redundant	MTW4-5O30V3H	2430W	PFC	340 / 13.39	422 / 16.61	43 / 1.69	141
N + 1 Redundant	G1W4-5BG0V0H	2700W	PFC	340 / 13.39	422 / 16.61	43 / 1.69	142

FORM FACTOR	MODEL NAME	WATTAGE	INPUT	D (mm/inch)	W (mm/inch)	H (mm/inch)	Page
N + 1 Redundant	PSS2-5A00V3H	1000W	PFC	360 / 14.17	127 / 5	44 / 1.73	143
N + 1 Redundant	PSS2-5C00V3H	1200W	PFC	360 / 14.17	127 / 5	44 / 1.73	143
N + 1 Redundant	M1K6-6CB0V0H	3200W	PFC	470 / 18.5	425 / 16.73	43 / 1.69	144
N + 1 Redundant	M1K6-5DH0V0H	4800W	PFC	470 / 18.5	425 / 16.73	43 / 1.69	145
N + 1 Redundant	M1K6-6DH0V0H	4800W	PFC	470 / 18.5	425 / 16.73	43 / 1.69	146
DC 1U	BP1P-5220V	220W	DC +24V	170 / 6.69	81.5 / 3.21	40.3 / 1.59	147
DC 1U	DP1P-5300V	300W	DC -48V	170 / 6.69	81.5 / 3.21	40.3 / 1.59	148
DC 1U	DP1P-5320V	320W	DC -48V	170 / 6.69	81.5 / 3.21	40.3 / 1.59	148
DC 1U	BP1H-5420V	420W	DC 24V	225 / 8.86	100 / 3.94	40.5 / 1.59	149
DC 1U	BP1H-5460V	460W	DC 24V	225 / 8.86	100 / 3.94	40.5 / 1.59	149
DC 1U	DP1H-5460V	460W	DC -48V	225 / 8.86	100 / 3.94	40.5 / 1.59	150
DC 1U	DP1H-5550V	500W	DC -48V	225 / 8.86	100 / 3.94	40.5 / 1.59	150
DC 2U	BP2H-5420V	420W	DC 24V	215 / 8.46	100 / 3.94	70 / 2.76	151
DC 2U	BP2H-5460V	460W	DC 24V	215 / 8.46	100 / 3.94	70 / 2.76	151
DC 2U	DP2H-5460V	460W	DC -48V	215 / 8.46	100 / 3.94	70 / 2.76	152
DC 2U	DP2H-5500V	500W	DC -48V	215 / 8.46	100 / 3.94	70 / 2.76	152
DC 2U	DP2H-5550V	550W	DC -48V	215 / 8.46	100 / 3.94	70 / 2.76	152
DC PS2	BHG2-5300V	300W	DC 24V	140 / 5.51	150 / 5.91	86 / 3.39	153
DC PS2	BHG2-5350V	350W	DC 24V	140 / 5.51	150 / 5.91	86 / 3.39	153
DC PS2	BHG2-5400V	400W	DC 24V	140 / 5.51	150 / 5.91	86 / 3.39	153
DC PS2	DHG2-5400V	400W	DC -48V	140 / 5.51	150 / 5.91	86 / 3.39	154
DC PS2	DHG2-5500V	500W	DC -48V	140 / 5.51	150 / 5.91	86 / 3.39	154
DC PS2	DHG2-5600V	600W	DC -48V	140 / 5.51	150 / 5.91	86 / 3.39	154
DC Micro Redundant	DR1U2-5200V4H	200W	DC -48V	260 / 10.24	106 / 4.17	41.8 / 1.65	155
DC Micro Redundant	DR1V2-5250V4H	250W	DC -48V	295 / 11.61	106 / 4.17	41.8 / 1.65	156
DC Micro Redundant	DM1R2-5500V0H	500W	DC -48V	295 / 11.61	106 / 4.17	41.3 / 1.63	157
DC Micro Redundant	DM1Y2-5150V2H	150W	DC -48V	275 / 10.83	106 / 4.17	41.3 / 1.63	158
DC Micro Redundant	DM1Y2-5300V2H	300W	DC -48V	275 / 10.83	106 / 4.17	41.3 / 1.63	158
DC Micro Redundant	BM1U2-5500V4H	500W	DC 24V	355 / 13.98	106 / 4.17	41.3 / 1.63	159
DC Micro Redundant	BM1U2-5501V4H	500W	DC 24V	355 / 13.98	106 / 4.17	41.3 / 1.63	159
DC Micro Redundant	DM1S2-5400V4H	400W	DC -48V	355 / 13.98	106 / 4.17	41.3 / 1.63	160
DC Micro Redundant	DM1S2-5401V4H	400W	DC -48V	355 / 13.98	106 / 4.17	41.3 / 1.63	160
DC Micro Redundant	DM1S2-5500V4H	500W	DC -48V	355 / 13.98	106 / 4.17	41.3 / 1.63	160
DC Micro Redundant	DM1S2-5501V4H	500W	DC -48V	355 / 13.98	106 / 4.17	41.3 / 1.63	160
DC Micro Redundant	DM1S2-5551V4H	550W	DC -48V	355 / 13.98	106 / 4.17	41.3 / 1.63	160
DC Micro Redundant	DM1U2-2650V4H	650W	DC -48V	355 / 13.98	106 / 4.17	41.3 / 1.63	161
DC Micro Redundant	DM1U2-5650V4H	650W	DC -48V	355 / 13.98	106 / 4.17	41.3 / 1.63	162
DC Micro Redundant	DM1U2-5750V4H	750W	DC -48V	355 / 13.98	106 / 4.17	41.3 / 1.63	162
DC Micro Redundant	DM1K2-5A00V0H	1000W	DC -48V	400 / 15.75	106 / 4.17	41.3 / 1.63	163
DC 1U Redundant	DR1S2-5300V4H	300W	DC -48V	230 / 9.06	176 / 6.93	41.8 / 1.65	164

FORM FACTOR	MODEL NAME	WATTAGE	INPUT	D (mm/inch)	W (mm/inch)	H (mm/inch)	Page
DC 1U Redundant	DR1S2-5380V4H	380W	DC -48V	230 / 9.06	176 / 6.93	41.8 / 1.65	164
DC Mini Redundant	BMRW-5360V4V	360W	DC 24V	185 / 7.28	150 / 5.91	86 / 3.39	165
DC Mini Redundant	DMRW-5500V4V	500W	DC -48V	185 / 7.28	150 / 5.91	86 / 3.39	166
DC Mini Redundant	DMRW-5600V4V	600W	DC -48V	185 / 7.28	150 / 5.91	86 / 3.39	166
DC 2U Redundant	BM1U2-5500V4V	500W	DC 24V	400 / 15.75	54.5 / 2.15	84.6 / 3.33	167
DC 2U Redundant	BM1U2-5501V4V	500W	DC 24V	400 / 15.75	54.5 / 2.15	84.6 / 3.33	167
DC 2U Redundant	DM1U2-5650V4V	650W	DC -48V	400 / 15.75	54.5 / 2.15	86 / 3.39	168
DC 2U Redundant	DM1U2-5750V4V	750W	DC -48V	400 / 15.75	54.5 / 2.15	86 / 3.39	168
DC 2U Redundant	DPSS2-5A00V3V	1000W	DC -48V	385 / 15.16	65 / 2.56	84 / 3.31	169
DC 2U Redundant	DR1S2-5300V4V	300W	DC -48V	207 / 8.15	85 / 3.35	84 / 3.31	170
DC 2U Redundant	DR1S2-5380V4V	380W	DC -48V	207 / 8.15	85 / 3.35	84 / 3.31	170
DC 2U Redundant	BM1P2-5250V4V	250W	DC 24V	217 / 8.54	85 / 3.35	84 / 3.31	171
DC 2U Redundant	DM1P2-5500V4V	500W	DC -48V	217 / 8.54	85 / 3.35	84 / 3.31	172
DC 2U Redundant	DM1X2-5700V0V	700W	DC -48V	240 / 9.45	101 / 3.98	84 / 3.31	173
DC 2U Redundant	BM1Z2-5360V3V	360W	DC 24V	265 / 10.43	101 / 3.98	84 / 3.31	174
DC 2U Redundant	DM1Z2-5500V3V	500W	DC -48V	265 / 10.43	101 / 3.98	84 / 3.31	175
DC 2U Redundant	DM1Z2-5550V3V	550W	DC -48V	265 / 10.43	101 / 3.98	84 / 3.31	175
DC 2U Redundant	BR2G-5420V4V	420W	DC 24V	276 / 10.87	101 / 3.98	82 / 3.23	176
DC 2U Redundant	BR2G-5460V4V	460W	DC 24V	276 / 10.87	101 / 3.98	82 / 3.23	176
DC 2U Redundant	DR2G-5500V4V	500W	DC -48V	276 / 10.87	101 / 3.98	82 / 3.23	177
DC 2U Redundant	DR2G-5600V4V	600W	DC -48V	276 / 10.87	101 / 3.98	82 / 3.23	177
DC 2U Redundant	DR2G-5800V	800W	DC -48V	340 / 13.39	101 / 3.98	82 / 3.23	178
DC 2U Redundant	BMTW2-5600V3V	600W	DC 24V	300 / 11.81	101 / 3.98	84 / 3.31	179
DC 2U Redundant	DM1W2-5600V3V	600W	DC -48V	300 / 11.81	101.2 / 3.98	84 / 3.31	180
DC 2U Redundant	DM1W2-5650V3V	650W	DC -48V	300 / 11.81	101.2 / 3.98	84 / 3.31	180
DC 2U Redundant	DM1W2-5700V3V	700W	DC -48V	300 / 11.81	101.2 / 3.98	84 / 3.31	180
DC 2U Redundant	BG1W2-5600V3V	600W	DC 24V	300 / 11.81	101.2 / 3.98	84 / 3.31	181
DC 2U Redundant	DG1W2-5660V3V	660W	DC -48V	300 / 11.81	101.2 / 3.98	84 / 3.31	182
DC 2U Redundant	DG1W2-5760V3V	760W	DC -48V	300 / 11.81	101.2 / 3.98	84 / 3.31	182
DC 2U Redundant	DG1W2-5860V3V	860W	DC -48V	300 / 11.81	101.2 / 3.98	84 / 3.31	182
DC 2U Redundant	DG1W2-5960V3V	960W	DC -48V	300 / 11.81	101.2 / 3.98	84 / 3.31	182
DC 2U Redundant	DG1W2-5A10V3V	1010W	DC -48V	300 / 11.81	101.2 / 3.98	84 / 3.31	182
DC 2U Redundant	DMTW2-5660V3V	660W	DC -48V	300 / 11.81	101.2 / 3.98	84 / 3.31	183
DC 2U Redundant	DMTW2-5820V3V	820W	DC -48V	300 / 11.81	101.2 / 3.98	84 / 3.31	183
DC 2U Redundant	DM1L2-5600V3V	600W	DC -48V	330 / 12.99	101.2 / 3.98	84 / 3.31	184
DC 2U Redundant	DM1L2-5650V3V	650W	DC -48V	330 / 12.99	101.2 / 3.98	84 / 3.31	184
DC 2U Redundant	DM1L2-5700V3V	700W	DC -48V	330 / 12.99	101.2 / 3.98	84 / 3.31	184
DC N+1 Redundant	DPSS2-5A00V3H	1000W	DC -48V	360 / 14.17	127 / 5	44 / 1.73	185
DC N+1 Redundant	DMTW4-5M10V3H	2210W	DC -48V	340 / 13.39	422 / 16.61	43 / 1.69	186
DC N+1 Redundant	DG1W4-5BG0V0H	2700W	DC -48V	340 / 13.39	422 / 16.61	43 / 1.69	187

OUTPUT CHARACTERISTICS

MODEL	WATTAGE	OUTPUT					
		+40V	X	X	X	X	X
MQ1G-1035V-40	35W	0.9A	X	X	X	X	X
REGULATION LOAD		±5%	X	X	X	X	X
RIPPLE AND NOISE		400mV	X	X	X	X	X

MQ1G-1035V-40

SPECIFICATION：

TEMPERATURE RANGE：OPERATING 0℃ ~70℃ , STORAGE –20℃ ~80℃

HOLD UP TIME：WHEN AC SOURCE SHUTDOWN DC OUTPUT MUST BE MAINTAIN 16ms IN REGULATION LIMIT AT NORMAL INPUT VOLTAGE(AC115V AT 80% OF FULL LOAD)

EFFICIENCY：83% (+/-2%) AT 230VAC AND LOAD CONDITION：40V/0.9A

OUTPUT PROTECTION： OPP / OVP / SCP

LEAKAGE CURRENT：3.5mA MAX. AT NOMINAL VOLTAGE 264VAC

DIMENSION：101.5mm (D) × 50.5mm (W) × 30mm (H)

THE POWER-SUPPLY IS FOR CHASSIS-ASSEMBLY ONLY AND IS NOT ALLOWED TO BE OPERATED AS STAND-ALONE COMPONENT. FINAL ASSEMBLY HAS TO COMPLY WITH CORRESPONDING EMC- AND SAFETY-REGULATIONS.

INPUT CHARACTERISTICS

VOLTAGE：

90~264VAC FULL RANGE

FREQUENCY：

47~63HZ

INPUT CURRENT：

1/0.5 AMPS @ ANY LOW/HIGH RANGE INPUT

INRUSH CURRENT：

35/70 AMPS @ 115/230V

EMI：

IEC61000-3-2, FCC, CISPR 22(EN 55022)

EMS：

EN 61000-4-2 ESD, EN61000-4-4 EFT, EN61000-4-5 SURGE

SAFETY：

TO MEET UL, CUL, TUV, CCC

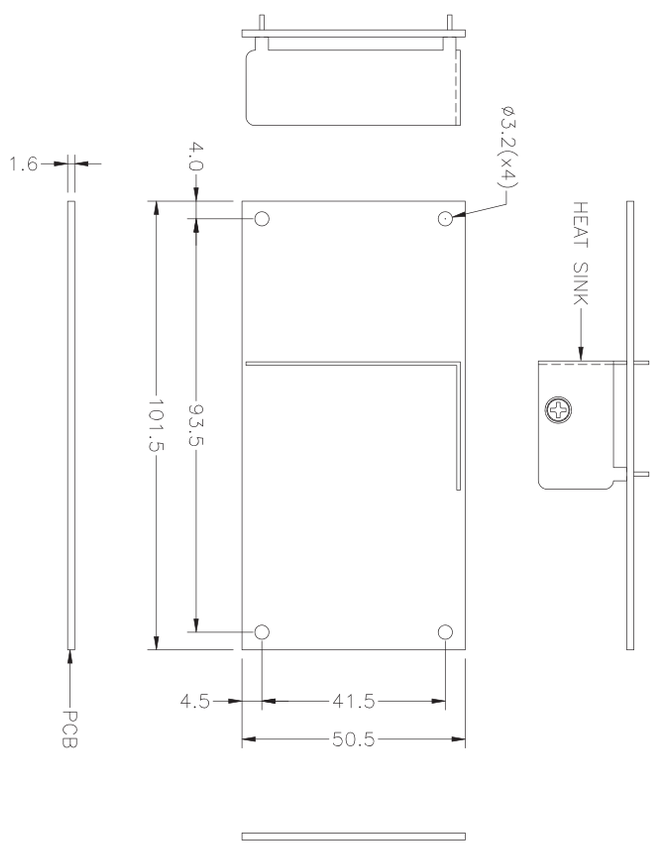

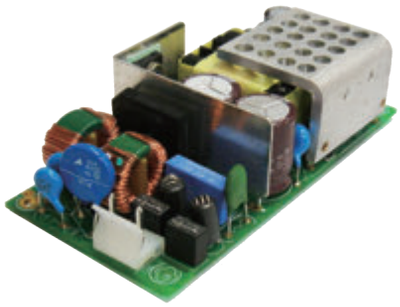

MQ1G-1050V-5

OUTPUT CHARACTERISTICS

MODEL	WATTAGE	OUTPUT					
		+5V	X	X	X	X	X
MQ1G-1050V-5	50W	10A	X	X	X	X	X
REGULATION LOAD		±5%	X	X	X	X	X
RIPPLE AND NOISE		50mV	X	X	X	X	X

SPECIFICATION：

TEMPERATURE RANGE：OPERATING 0℃ ~70℃ , STORAGE –20℃ ~80℃

HOLD UP TIME：WHEN AC SOURCE SHUTDOWN DC OUTPUT MUST BE MAINTAIN 16ms IN REGULATION LIMIT AT NORMAL INPUT VOLTAGE(AC115V AT 80% OF FULL LOAD)

EFFICIENCY：81% (+/-2%) AT 115VAC/230VAC AND LOAD CONDITION：5V/10A

OUTPUT PROTECTION： OPP / OVP / SCP

LEAKAGE CURRENT：3.5mA MAX. AT NOMINAL VOLTAGE 264VAC

DIMENSION：101.5mm (D) × 50.5mm (W) × 30mm (H)

THE POWER-SUPPLY IS FOR CHASSIS-ASSEMBLY ONLY AND IS NOT ALLOWED TO BE OPERATED AS STAND-ALONE COMPONENT. FINAL ASSEMBLY HAS TO COMPLY WITH CORRESPONDING EMC- AND SAFETY-REGULATIONS.

INPUT CHARACTERISTICS

VOLTAGE：

90~264VAC FULL RANGE

FREQUENCY：

47~63HZ

INPUT CURRENT：

1.5/1 AMPS @ ANY LOW/HIGH RANGE INPUT VOLTAGE

INRUSH CURRENT：

35/70 AMPS @ 115/230VAC

EMI：

IEC61000-3-2, FCC, CISPR 22(EN 55022)

EMS：

EN 61000-4-2 ESD, EN61000-4-4 EFT, EN61000-4-5 SURGE

SAFETY：

TO MEET UL, CUL CSA, TUV, CCC

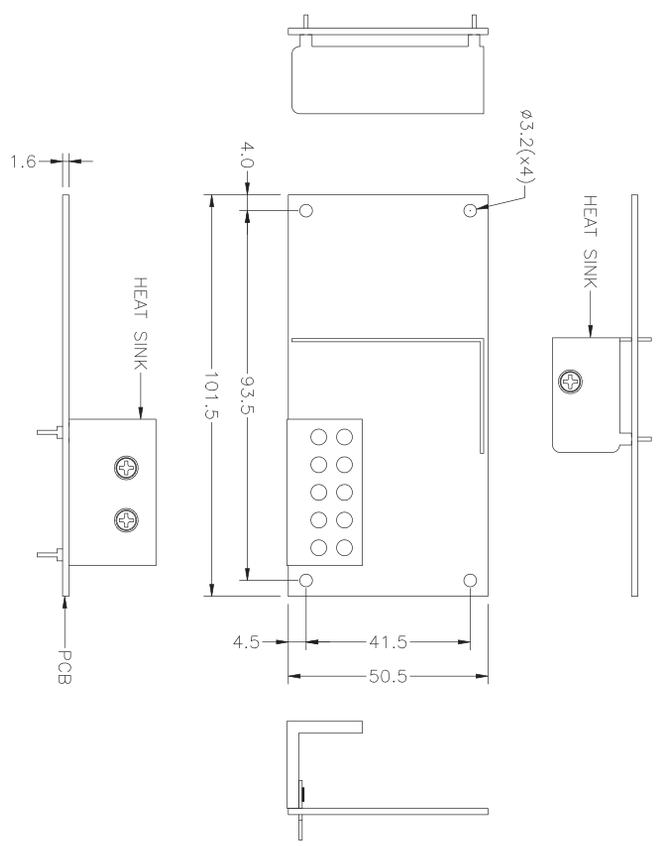

MQ1G-1060V-12
MQ1G-1060V-24
MQ1G-1060V-40
MQ1G-1060V-48

OUTPUT CHARACTERISTICS

MODEL	WATTAGE	OUTPUT					
		+12V	+24V	+40V	+48V	X	X
MQ1G-1060V-12	60W	5A	X	X	X	X	X
MQ1G-1060V-24	60W	X	2.5A	X	X	X	X
MQ1G-1060V-40	60W	X	X	1.5A	X	X	X
MQ1G-1060V-48	60W	X	X	X	1.25A	X	X
REGULATION LOAD		±5%	±5%	±5%	±5%	X	X
RIPPLE AND NOISE		120mV	240mV	400mV	480mV	X	X

SPECIFICATION：

TEMPERATURE RANGE：OPERATING 0℃ ~70℃ , STORAGE –20℃ ~80℃

HOLD UP TIME：WHEN AC SOURCE SHUTDOWN DC OUTPUT MUST BE MAINTAIN 16ms IN REGULATION LIMIT AT NORMAL INPUT VOLTAGE(AC115V AT 80% OF FULL LOAD)

EFFICIENCY：85% (+/-2%) AT 230VAC AND LOAD CONDITION：40V/1.5A

OUTPUT PROTECTION： OPP / OVP / SCP

LEAKAGE CURRENT：3.5mA MAX. AT NOMINAL VOLTAGE 264VAC

DIMENSION：101.5mm (D) × 50.5 mm (W) × 30mm (H)

THE POWER-SUPPLY IS FOR CHASSIS-ASSEMBLY ONLY AND IS NOT ALLOWED TO BE OPERATED AS STAND-ALONE COMPONENT. FINAL ASSEMBLY HAS TO COMPLY WITH CORRESPONDING EMC- AND SAFETY-REGULATIONS.

INPUT CHARACTERISTICS

VOLTAGE：

90~264VAC FULL RANGE

FREQUENCY：

47~63HZ

INPUT CURRENT：

1.5/1 AMPS @ ANY LOW/HIGH RANGE INPUT VOLTAGE

INRUSH CURRENT：

35/70 AMPS @ 115/230VAC

EMI：

IEC61000-3-2, FCC, CISPR 22(EN 55022)

EMS：

EN 61000-4-2 ESD, EN61000-4-4 EFT, EN61000-4-5 SURGE

SAFETY：

TO MEET UL, CUL, TUV, CCC

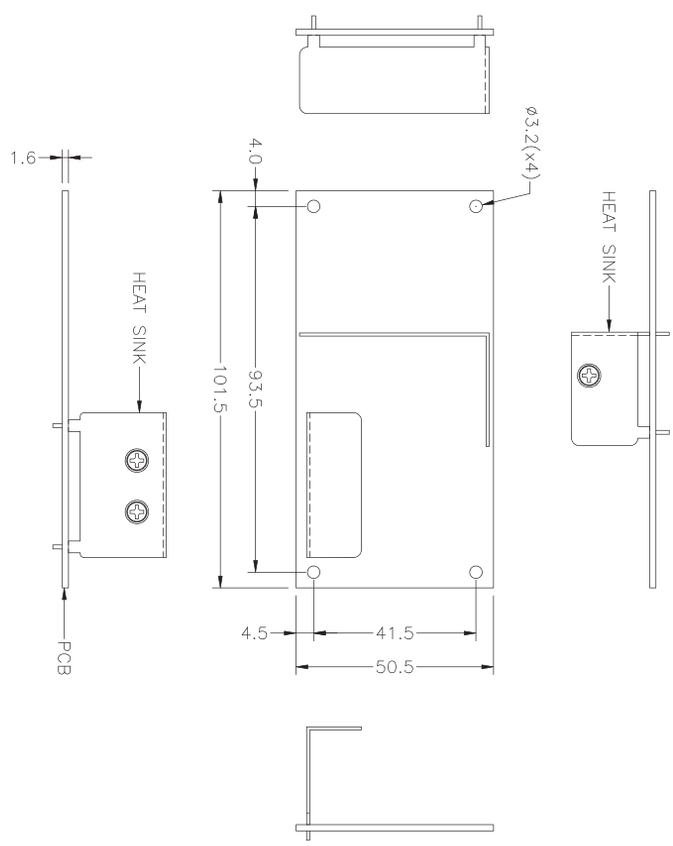

MQ1D-5120V

OUTPUT CHARACTERISTICS

MODEL	WATTAGE	OUTPUT					
		+5V	+12V	+3.3V	-5V	-12V	+5VSB
MQ1D-5120V	120W	14A	8A	12A	X	0.5A	1.5A
REGULATION LOAD		±5%	±5%	±5%	X	±10%	±5%
RIPPLE AND NOISE		50mV	120mV	50mV	X	120mV	50mV

REMARKS：
+5V and +3.3V TOTAL OUTPUT MAX：70W (WITH 20 CFM)
+5V and +3.3V TOTAL OUTPUT MAX：50W (WITHOUT FAN)

SPECIFICATION：

TEMPERATURE RANGE：OPERATING 0℃ ~50℃ , STORAGE –20℃ ~80℃

HOLD UP TIME：41mS MINIMUM AT 115V FULL LOAD

EFFICIENCY：82%±2% TYPICAL @ 230V FULL LOAD

POWER GOOD SIGNAL：ON DELAY 100mS TO 550mS · OFF DELAY 1mS

OUTPUT PROTECTION： OPP / OVP / SCP

LEAKAGE CURRENT：3.5mA MAX. AT NOMINAL VOLTAGE 264VAC

DIMENSION：190mm (D) × 83.8mm (W) × 39mm (H)

THE POWER-SUPPLY IS FOR CHASSIS-ASSEMBLY ONLY AND IS NOT ALLOWED TO BE OPERATED AS STAND-ALONE COMPONENT. FINAL ASSEMBLY HAS TO COMPLY WITH CORRESPONDING EMC- AND SAFETY-REGULATIONS.

INPUT CHARACTERISTICS

VOLTAGE：

90~264VAC FULL RANGE

FREQUENCY：

47~63HZ

INPUT CURRENT：

2/1 AMPS @ ANY LOW/HIGH RANGE INPUT VOLTAGE

INRUSH CURRENT：

35/70 AMPS @ 115/230VAC

POWER FACTOR CORRECTION：

PFC CAN REACH THE TARGET OF 95% AT 115/230VAC, FULL LOAD

EMI：

IEC61000-3-2, FCC, CISPR 22(EN 55022)

EMS：

EN 61000-4-2 ESD, EN61000-4-4 EFT, EN61000-4-5 SURGE

SAFETY：

TO MEET UL, CUL, TUV, CCC

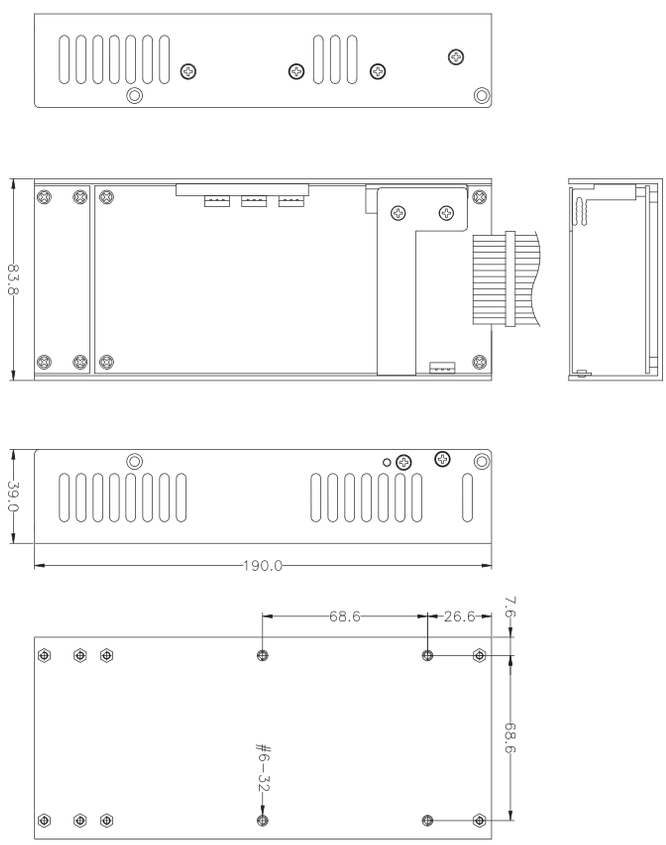

MP1S-5220V
MP1S-5300V

OUTPUT CHARACTERISTICS

MODEL	WATTAGE	OUTPUT					
		+5V	+12V	+3.3V	-5V	-12V	+5VSB
MP1S-5220V	220W	12A	16A	10A	X	0.3A	2A
MP1S-5300V	300W	18A	24A	17A	X	0.3A	2.5A
REGULATION LOAD		±5%	±5%	±5%	X	±10%	±5%
RIPPLE AND NOISE		60mV	120mV	60mV	X	120mV	60mV

REMARKS：
+5V AND +3.3V TOTAL OUTPUT MAX：80W / 120W

INPUT CHARACTERISTICS

VOLTAGE：

90~264VAC FULL RANGE

FREQUENCY：

47~63HZ

INPUT CURRENT：

WATTAGE	115V	230V
220W	3.5A	2A
300W	4.5A	2A

INRUSH CURRENT：

70/140 AMPS @ 115/230 VAC

POWER FACTOR CORRECTION：

PFC CAN REACH THE TARGET OF 95% AT 115/230VAC, FULL LOAD)

EMI：

IEC61000-3-2, FCC, CISPR 22(EN 55022)

EMS：

EN 61000-4-2 ESD, EN61000-4-4 EFT, EN61000-4-5 SURGE

SAFETY：

TO MEET UL60601-1, CUL CSA C22.2 NO. 60601-1, TUV EN 60601-1, CCC GB4943-1995, GB9254-1998, GB17625.1-1998

E143756

SPECIFICATION：

TEMPERATURE RANGE：OPERATING 0℃ ~40℃ , STORAGE -20℃ ~80℃

HOLD UP TIME：16mS MINIMUM AT 115V FULL LOAD

EFFICIENCY：80%±2% TYPICAL @ 115V FULL LOAD

POWER GOOD SIGNAL：ON DELAY 100mS TO 500mS · OFF DELAY 1mS

OUTPUT PROTECTION：OPP / OVP / OCP / SCP

REMOTE ON/OFF CONTROL

LEAKAGE CURRENT：0.3mA MAX. AT NOMINAL VOLTAGE 264VAC

DIMENSION：190mm (D) × 81.5mm (W) × 40.3mm (H)

THE POWER-SUPPLY IS FOR CHASSIS-ASSEMBLY ONLY AND IS NOT ALLOWED TO BE OPERATED AS STAND-ALONE COMPONENT. FINAL ASSEMBLY HAS TO COMPLY WITH CORRESPONDING EMC- AND SAFETY-REGULATIONS.

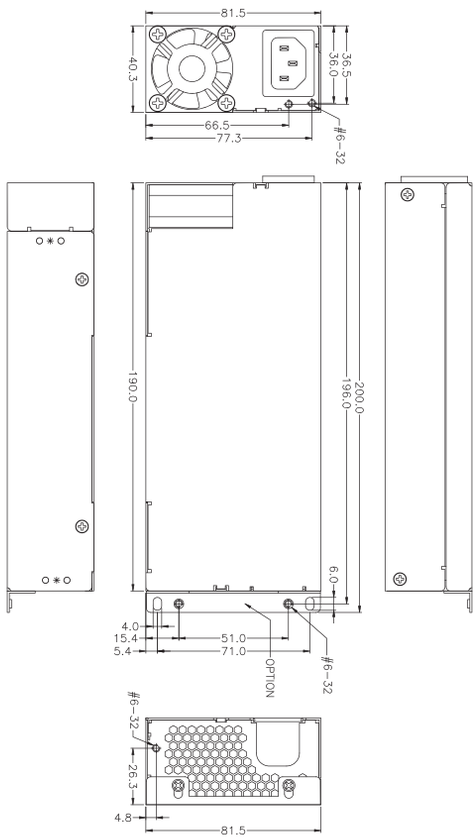

MP1S-6400V

OUTPUT CHARACTERISTICS

MODEL	WATTAGE	OUTPUT					
		+5V	+12V	+3.3V	+24V	-12V	+5VSB
MP1S-6400V	400W	12A	16A	10A	6A	0.3A	2.5A
REGULATION LOAD		±5%	±5%	±5%	±5%	±10%	±5%
RIPPLE AND NOISE		60mV	120mV	60mV	240mV	120mV	60mV

REMARKS：
+5V AND +3.3V TOTAL OUTPUT MAX：90W
+5V&+12V&-12V&+3.3V&5VSB TOTAL OUTPUT MAX：260W

SPECIFICATION：

TEMPERATURE RANGE：OPERATING 0℃～ 40℃ , STORAGE-20℃ ~80℃

HOLD UP TIME：10mS MINIMUM AT 115V FULL LOAD

EFFICIENCY：80%±2% TYPICAL @ 115V FULL LOAD

POWER GOOD SIGNAL：ON DELAY 100mS TO 500mS · OFF DELAY 1mS

OUTPUT PROTECTION： OPP / OVP / OCP / SCP

LEAKAGE CURRENT：0.3mA MAX. AT NOMINAL VOLTAGE 264VAC

REMOTE ON/OFF CONTROL

DIMENSION：250mm (D) × 81.5mm (W) × 40.3mm (H)

THE POWER-SUPPLY IS FOR CHASSIS-ASSEMBLY ONLY AND IS NOT ALLOWED TO BE OPERATED AS STAND-ALONE COMPONENT. FINAL ASSEMBLY HAS TO COMPLY WITH CORRESPONDING EMC- AND SAFETY-REGULATIONS.

INPUT CHARACTERISTICS

VOLTAGE：

90~264VAC FULL RANGE

FREQUENCY：

47~63HZ

INPUT CURRENT：

6/3A AT ANY LOW/HIGH RANGE INPUT VOLTAGE

INRUSH CURRENT：

70/140 AMPS @ 115/230 VAC

POWER FACTOR CORRECTION：

PFC CAN REACH THE TARGET OF 95% AT 115/230VAC, FULL LOAD

EMI：

IEC61000-3-2, FCC, CISPR 22(EN 55022)

EMS：

EN 61000-4-2 ESD, EN61000-4-4 EFT, EN61000-4-5 SURGE

SAFETY：

TO MEET UL60601-1, CUL CSA C22.2 NO. 60601-1, TUV EN 60601-1, CCC GB4943-1995, GB9254-1998, GB17625.1-1998

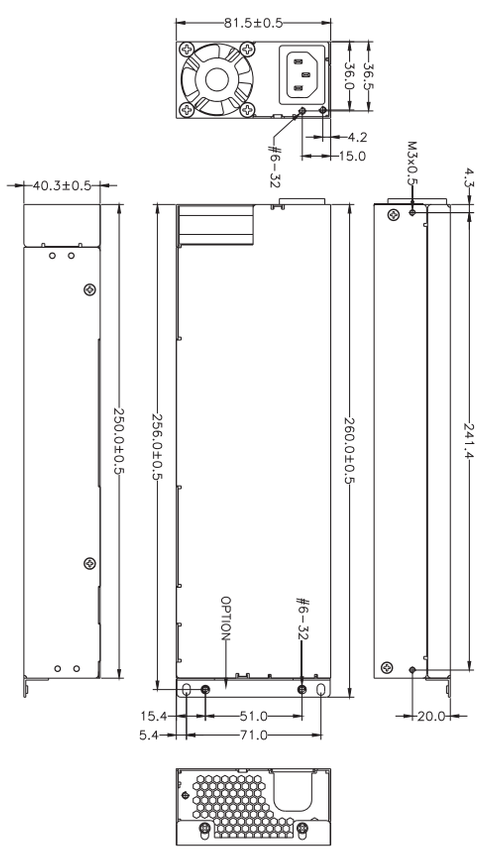

E143756

MEDICAL MINI 1U

MV1E-5350V

OUTPUT CHARACTERISTICS

MODEL	WATTAGE	OUTPUT					
		+5V	+12V	+3.3V	-5V	-12V	+5VSB
MV1E-5350V	350W	20A	25A	20A	X	0.7A	2A
REGULATION LOAD		±5%	±5%	±5%	X	+13% / -7%	±5%
RIPPLE AND NOISE		50mV	120mV	50mV	X	120mV	50mV

REMARKS：
+5V AND +3.3V TOTAL OUTPUT MAX：130W

SPECIFICATION：

TEMPERATURE RANGE：OPERATING 0℃ ~50℃ , OPERATING：-20℃ ~80

HOLD UP TIME：16mS MINIMUM AT 115V LOAD <300W & 24mS MINIMUM AT 230V FULL LOAD

EFFICIENCY：81-84% TYPICAL @ 110V FULL LOAD

OUTPUT PROTECTION： OPP / OVP / SCP

POWER GOOD SIGNAL：ON DELAY 100mS TO 550mS · OFF DELAY 1mS

REMOTE ON/OFF CONTROL

LEAKAGE CURRENT：0.2mA MAX. AT NOMINAL VOLTAGE 240VAC

DIMENSION：260mm (D) × 100mm (W) × 40.5mm (H)

THE POWER-SUPPLY IS FOR CHASSIS-ASSEMBLY ONLY AND IS NOT ALLOWED TO BE OPERATED AS STAND-ALONE COMPONENT. FINAL ASSEMBLY HAS TO COMPLY WITH CORRESPONDING EMC- AND SAFETY-REGULATIONS.

INPUT CHARACTERISTICS

VOLTAGE：

90~264VAC FULL RANGE

FREQUENCY：

47~63HZ

INPUT CURRENT：

6/3 AMPS @ ANY LOW/HIGH RANGE INPUT VOLTAGE

INRUSH CURRENT：

15/30 AMPS @ 115/230VAC

POWER FACTOR CORRECTION：

PFC CAN REACH THE TARGET OF 95% AT 115/230VAC, FULL LOAD

EMI：

IEC61000-3-2, FCC, CISPR 22(EN 55022)

EMS：

EN 61000-4-2 ESD, EN61000-4-4 EFT, EN61000-4-5 SURGE

SAFETY：

TO MEET UL60601-1, CUL CSA C22.2 NO. 60601-1, TUV EN 60601-1, CCC GB4943-1995, GB9254-1998, GB17625.1-1998

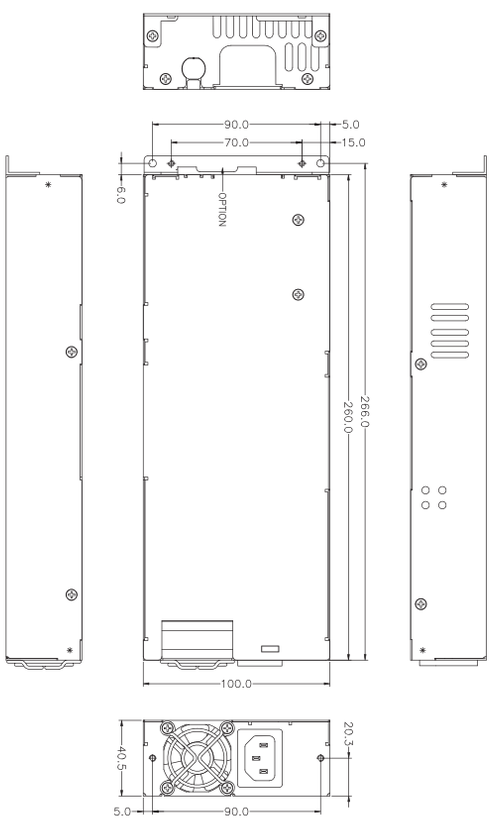

E143756

MEDICAL 1U

MP2M-5435V

OUTPUT CHARACTERISTICS

MODEL	WATTAGE	OUTPUT					
		+5V	+12V	+3.3V	-5V	-12V	+5VSB
MP2M-5435V	435W	20A	32A	20A	X	0.7A	2.0A
REGULATION LOAD		±5%	±5%	±5%	X	+13/-7%	±5%
RIPPLE AND NOISE		50mV	120mV	50mV	X	120mV	50mV

REMARKS：
+5V AND +3.3V TOTAL OUTPUT MAX：130W

SPECIFICATION：

TEMPERATURE RANGE： OPERATING 0℃ ~ 50℃ , STORAGE -20℃ ~ 80℃

HOLD UP TIME： 16ms MINIMUM AT 115V FULL LOAD

EFFICIENCY：TYPICAL 80-83% @ 110V FULL LOAD

OUTPUT PROTECTION OPP / OVP / SCP

LEAKAGE CURRENT：0.2mA MAX. AT NOMINAL VOLTAGE 240VAC

DIMENSION：270mm (D) x 100mm (W) x 70mm (H)

THE POWER-SUPPLY IS FOR CHASSIS-ASSEMBLY ONLY AND IS NOT ALLOWED TO BE OPERATED AS STAND-ALONE COMPONENT. FINAL ASSEMBLY HAS TO COMPLY WITH CORRESPONDING EMC- AND SAFETY-REGULATIONS.

INPUT CHARACTERISTICS

VOLTAGE：

90~264VAC FULL RANGE

FREQUENCY：

47~63HZ

INPUT CURRENT：

7/3 AMPS @ ANY LOW/HIGH RANGE INPUT VOLTAGE

INRUSH CURRENT：

15/30 AMPS @ 115/230 VAC

POWER FACTOR CORRECTION：

PFC CAN REACH THE TARGET OF 95% AT 115/230VAC, FULL LOAD

EMI：

IEC61000-3-2, FCC, CISPR 22(EN 55022)

EMS：

EN 61000-4-2 ESD, EN61000-4-4 EFT, EN61000-4-5 SURGE

SAFETY：

TO MEET UL60601-1, CUL CSA C22.2 NO. 60601-1, TUV EN 60601-1, CCC GB4943-1995, GB9254-1998, GB17625.1-1998

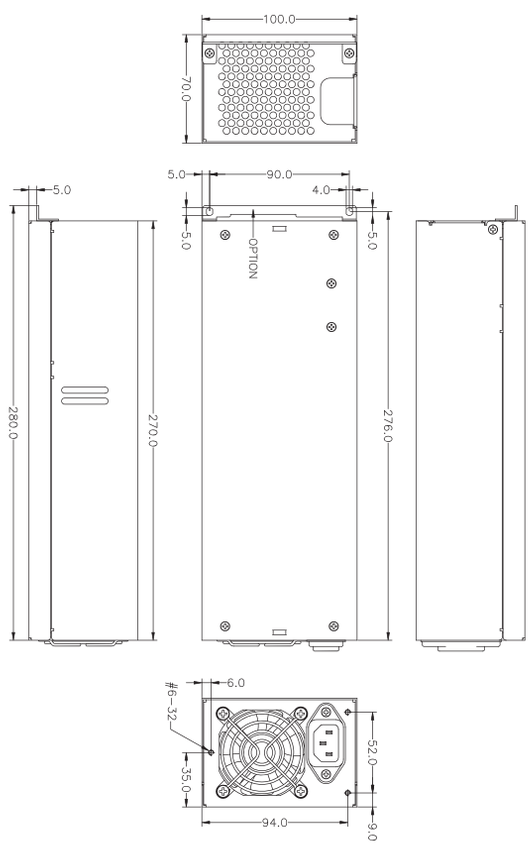

E143756

MHG2-6300P
MHG2-6350P
MHG2-6400P

OUTPUT CHARACTERISTICS

MODEL	WATTAGE	OUTPUT					
		+5V	+12V	+3.3V	-5V	-12V	+5VSB
MHG2-6300P	300W	35A	22A	28A	0.5A	0.8A	2.0A
MHG2-6350P	350W	35A	26A	28A	0.5A	0.8A	2.0A
MHG2-6400P	400W	35A	30A	28A	0.5A	0.8A	2.0A
REGULATION LOAD		±5%	+7/-5%	±5%	±5%	±5%	±5%
RIPPLE AND NOISE		50mV	120mV	50mV	150mV	150mV	50mV

REMARKS :
+5V AND +3.3V TOTAL OUTPUT MAX : 45A

SPECIFICATION :

TEMPERATURE RANGE : OPERATING -10°C ~50°C , STORAGE -40°C ~80°C

HOLD UP TIME : 16 ms MINIMUM AT FULL LOAD & NORMAL INPUT VOLTAGE

EFFICIENCY : 70% TYPICAL @ FULL LOAD

POWER GOOD SIGNAL : ON DELAY 100 ms TO 500 ms, OFF DELAY 1 ms

OUTPUT PROTECTION : OPP / OVP / SCP

LEAKAGE CURRENT : 0.3mA MAX. AT NOMINAL VOLTAGE 264VAC

DIMENSION : 140mm (D) x 150mm (W) x 86 mm (H) (PS/2)

THE POWER-SUPPLY IS FOR CHASSIS-ASSEMBLY ONLY AND IS NOT ALLOWED TO BE OPERATED AS STAND-ALONE COMPONENT. FINAL ASSEMBLY HAS TO COMPLY WITH CORRESPONDING EMC- AND SAFETY-REGULATIONS.

INPUT CHARACTERISTICS

VOLTAGE :

90~264VAC FULL RANGE

FREQUENCY :

47~63HZ

INPUT CURRENT :

WATTAGE	115V	230V
300W	7A	3.5A
350W	7A	3.5A
400W	8A	4A

INRUSH CURRENT :

65/125 AMPS @ 115/230VAC

POWER FACTOR CORRECTION :

PFC CAN REACH THE TARGET OF 95% AT 115/230VAC, FULL LOAD

EMI :

IEC61000-3-2, FCC, CISPR 22(EN 55022)

EMS :

EN 61000-4-2 ESD, EN61000-4-4 EFT, EN61000-4-5 SURGE

SAFETY :

TO MEET UL60601-1, CUL CSA C22.2 NO. 60601-1, TUV EN 60601-1, CCC GB4943-1995, GB9254-1998, GB17625.1-1998

E143756

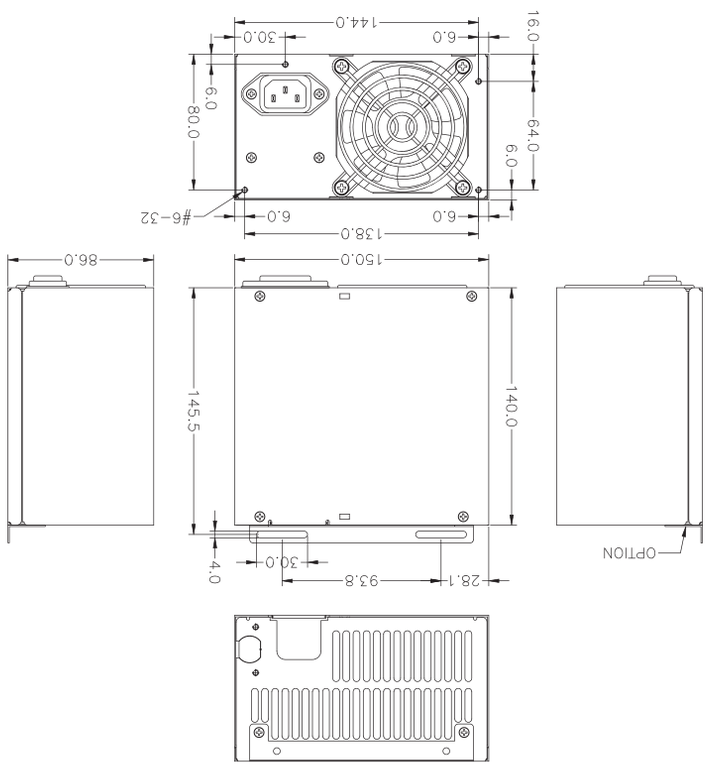

MHU2-5400V

OUTPUT CHARACTERISTICS

MODEL	WATTAGE	OUTPUT					
		+5V	+12V	+3.3V	-5V	-12V	+5VSB
MHU2-5400V	400W	18A	32A	18A	X	0.5A	2A
REGULATION LOAD		±5%	±5%	±5%	X	±5%	±5%
RIPPLE AND NOISE		50mV	120mV	50mV	X	120mV	50mV

REMARKS：
+5V AND +3.3V TOTAL OUTPUT MAX：30A

SPECIFICATION：

TEMPERATURE RANGE：OPERATING 0°C ~40°C

HOLD UP TIME：16mS MINIMUM AT 115V LOAD

EFFICIENCY：80-85% TYPICAL @ 115V FULL LOAD

POWER GOOD SIGNAL：ON DELAY 100mS TO 500mS · OFF DELAY 1Ms

OUTPUT PROTECTION： OPP / OVP / SCP

REMOTE ON/OFF CONTROL

LEAKAGE CURRENT：0.3mA MAX. AT NOMINAL VOLTAGE 264VAC

DIMENSION：140mm (D) × 150mm (W) × 86mm (H)

THE POWER-SUPPLY IS FOR CHASSIS-ASSEMBLY ONLY AND IS NOT ALLOWED TO BE OPERATED AS STAND-ALONE COMPONENT. FINAL ASSEMBLY HAS TO COMPLY WITH CORRESPONDING EMC- AND SAFETY-REGULATIONS.

INPUT CHARACTERISTICS

VOLTAGE：

90~264VAC FULL RANGE

FREQUENCY：

47~63HZ

INPUT CURRENT：

6/3 AMPS @ ANY LOW/HIGH RANGE INPUT VOLTAGE

INRUSH CURRENT：

20/40 AMPS @ 115/230VAC

POWER FACTOR CORRECTION：

PFC CAN REACH THE TARGET OF 95% AT 115/230VAC, FULL LOAD

EMI：

IEC61000-3-2, FCC, CISPR 22(EN 55022)

EMS：

EN 61000-4-2 ESD, EN61000-4-4 EFT, EN61000-4-5 SURGE

SAFETY：

TO MEET UL60601-1, CUL CSA C22.2 NO. 60601-1, TUV EN 60601-1, CCC GB4943-1995, GB9254-1998, GB17625.1-1998

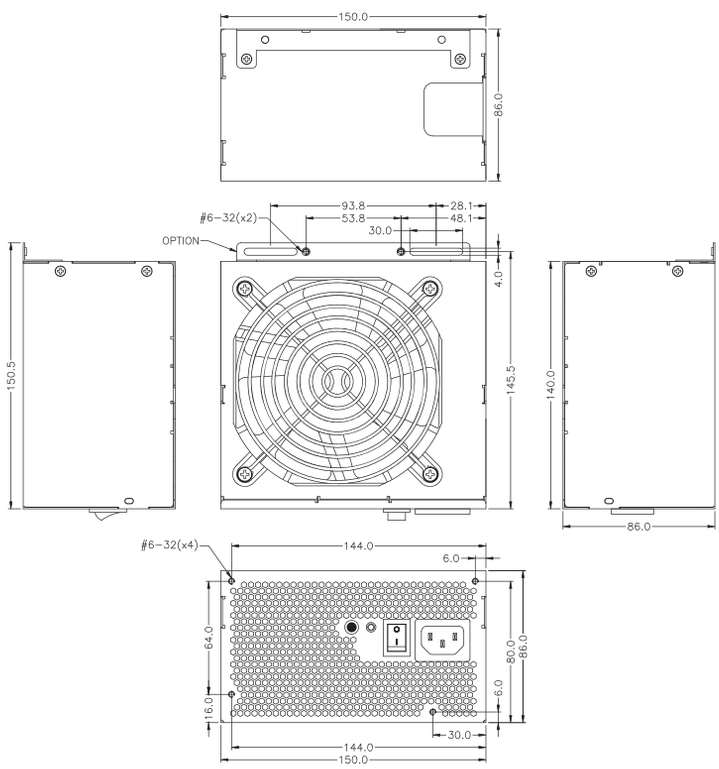

E143756

MPSM-5500V
MPSM-5600V

OUTPUT CHARACTERISTICS

MODEL	WATTAGE	OUTPUT					
		+5V	+12V	+3.3V	-5V	-12V	+5VSB
MPSM-5500V	500W	20A	36A	20A	X	0.8A	3.5A
MPSM-5600V	600W	25A	45A	25A	X	0.8A	3.5A
REGULATION LOAD		±5%	±5%	±5%	X	±5%	±5%
RIPPLE AND NOISE		50mV	120mV	50mV	X	120mV	50mV

REMARKS：
+5V AND +3.3V TOTAL MAX：40A

SPECIFICATION：

TEMPERATURE RANGE： OPERATING 0℃ ~ 40℃

HOLD UP TIME： WHEN POWER SHUTDOWN DC OUTPUT 5V MUST BE MAINTAIN 16ms IN REGULATION LIMIT AT NORMAL INPUT VOLTAGE

EFFICIENCY：TYPICAL 80-85% @ FULL LOAD

OUTPUT PROTECTION： OPP / OVP / SCP

LEAKAGE CURRENT：0.3mA MAX. AT NOMINAL VOLTAGE 264VAC

DIMENSION：160mm (D) x 150mm (W) x 86mm (H)

THE POWER-SUPPLY IS FOR CHASSIS-ASSEMBLY ONLY AND IS NOT ALLOWED TO BE OPERATED AS STAND-ALONE COMPONENT. FINAL ASSEMBLY HAS TO COMPLY WITH CORRESPONDING EMC- AND SAFETY-REGULATIONS.

INPUT CHARACTERISTICS

VOLTAGE：

90~264VAC FULL RANGE

FREQUENCY：

47~63HZ

INPUT CURRENT：

8/4 AMPS @ ANY LOW/HIGH RANGE INPUT VOLTAGE

10/5 AMPS @ ANY LOW/HIGH RANGE INPUT VOLTAGE

INRUSH CURRENT：

20/40 AMPS @ 115/230VAC

POWER FACTOR CORRECTION：

PFC CAN REACH THE TARGET OF 95% AT 115/230VAC, FULL LOAD

EMI：

IEC61000-3-2, FCC, CISPR 22(EN 55022)

EMS：

EN 61000-4-2 ESD, EN61000-4-4 EFT, EN61000-4-5 SURGE

SAFETY：

TO MEET UL60601-1, CUL CSA C22.2 NO. 60601-1, TUV EN 60601-1, CCC GB4943-1995, GB9254-1998, GB17625.1-1998

E143756

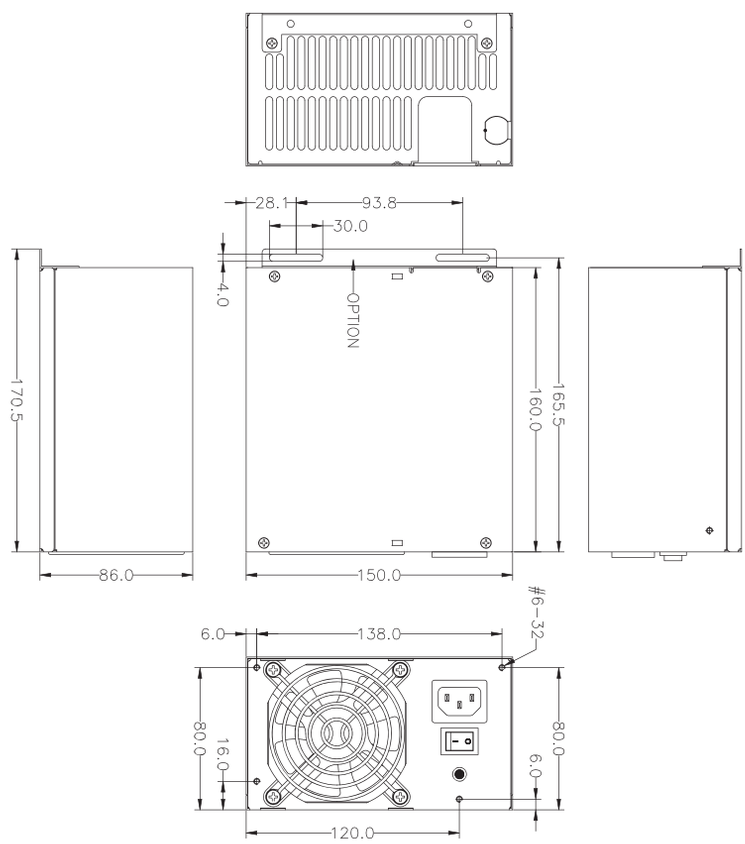

Q1P-1052V19

OUTPUT CHARACTERISTICS

MODEL	WATTAGE	OUTPUT					
		+5V	+19V	+3.3V	-5V	-12V	+5VSB
Q1P-1052V19	50W	X	2.63A	X	X	X	X
REGULATION LOAD		X	±5%	X	X	X	X
RIPPLE AND NOISE		X	190mV	X	X	X	X

REMARKS :
+5V AND +3.3V TOTAL OUTPUT MAX : 50W

SPECIFICATION :

TEMPERATURE RANGE : OPERATING 0°C ~ 60°C , STORAGE –20°C ~80°C

HOLD UP TIME : 16mS MINIMUM AT 115V 80% OF FULL LOAD

EFFICIENCY : 83% AT 115/230VAC AND LOAD CONDITION:12V/5A

OUTPUT PROTECTION : OPP / OVP / SCP

LEAKAGE CURRENT : 3.5mA MAX. AT NOMINAL VOLTAGE 264VAC

DIMENSION : 94.5mm (D) × 39.5mm (W) × 32mm (H)

THE POWER-SUPPLY IS FOR CHASSIS-ASSEMBLY ONLY AND IS NOT ALLOWED TO BE OPERATED AS STAND-ALONE COMPONENT. FINAL ASSEMBLY HAS TO COMPLY WITH CORRESPONDING EMC- AND SAFETY-REGULATIONS.

INPUT CHARACTERISTICS

VOLTAGE :

90~264VAC FULL RANGE

FREQUENCY :

47~63HZ

INPUT CURRENT :

1.3/0.8A AT ANY LOW/HIGH RANGE INPUT VOLTAGE

INRUSH CURRENT :

70AMPS @230 VAC

EMI :

IEC61000-3-2, FCC, CISPR 22(EN 55022)

EMS :

EN 61000-4-2 ESD, EN61000-4-4 EFT, EN61000-4-5 SURGE

SAFETY :

TO MEET UL, CUL, TUV, CCC

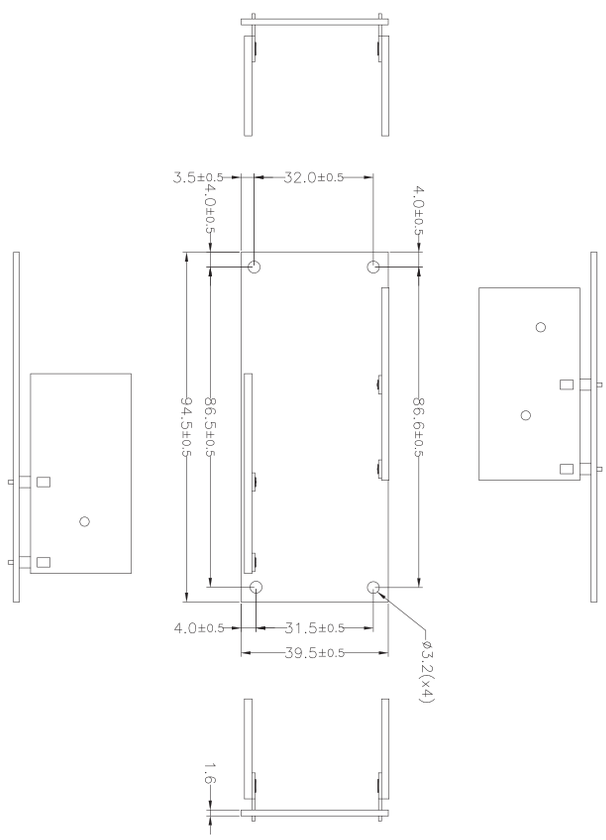

Q1L-5060V

OUTPUT CHARACTERISTICS

MODEL	WATTAGE	OUTPUT					
		+5V	+12V	+3.3V	-5V	-12V	+5VSB
Q1L-5060V	60W	7A	5A	6A	X	0.3A	4A
REGULATION LOAD		±5%	±5%	±5%	X	±10%	±5%
RIPPLE AND NOISE		50mV	120mV	50mV	X	120mV	50mV

REMARKS：
+5V AND +3.3V TOTAL OUTPUT MAX：40W

SPECIFICATION：

TEMPERATURE RANGE：OPERATING 0℃ ~ 70℃ , STORAGE–20℃ ~80℃

HOLD UP TIME：16mS MINIMUM AT 115V @80% OF FULL LOAD

EFFICIENCY：80%±2% TYPICAL @ 115VAC IN

POWER GOOD SIGNAL：ON DELAY 100mS TO 550mS · OFF DELAY 1mS

OUTPUT PROTECTION：OPP / OVP / SCP

LEAKAGE CURRENT：3.5mA MAX. AT NOMINAL VOLTAGE 264VAC

REMOTE ON/OFF CONTROL

DIMENSION：176mm (D) × 39mm (W) × 39mm (H)

THE POWER-SUPPLY IS FOR CHASSIS-ASSEMBLY ONLY AND IS NOT ALLOWED TO BE OPERATED AS STAND-ALONE COMPONENT. FINAL ASSEMBLY HAS TO COMPLY WITH CORRESPONDING EMC- AND SAFETY-REGULATIONS.

INPUT CHARACTERISTICS

VOLTAGE：

90~264VAC FULL RANGE

FREQUENCY：

47~63HZ

INPUT CURRENT：

1.5/1A AT ANY LOW/HIGH RANGE INPUT VOLTAGE

INRUSH CURRENT：

35/70 AMPS @115/230 VAC

EMI：

IEC61000-3-2, FCC, CISPR 22(EN 55022)

EMS：

EN 61000-4-2 ESD, EN61000-4-4 EFT, EN61000-4-5 SURGE

SAFETY：

TO MEET UL&CUL, TUV, CCC

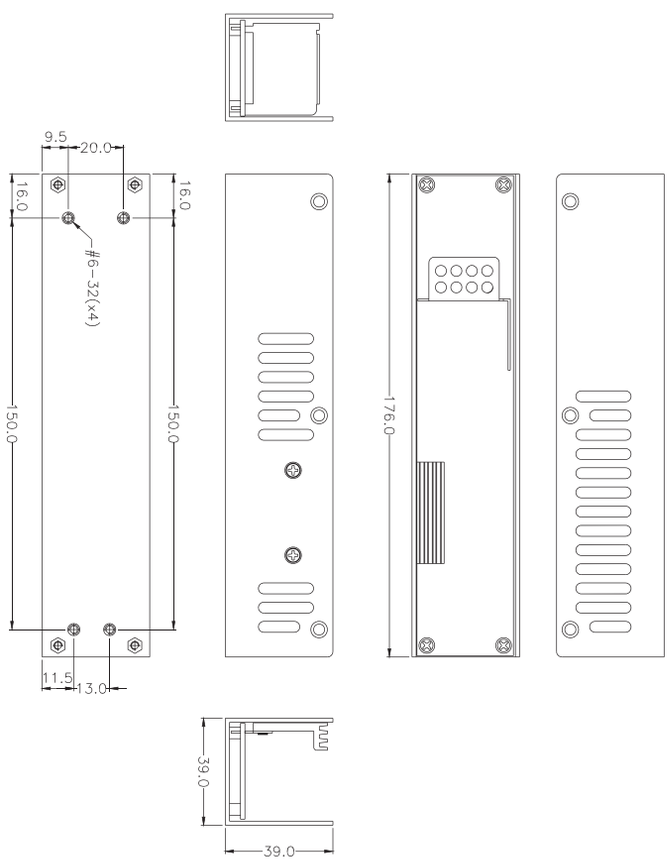

Q1J-1050V-5
Q1J-1060V-12
Q1J-1060V-24
Q1J-1060V-48

OUTPUT CHARACTERISTICS

MODEL	WATTAGE	OUTPUT			
		+5V	+12V	+24V	+48V
Q1J-1050V-5	50W	10A	X	X	X
Q1J-1060V-12	60W	X	5A	X	X
Q1J-1060V-24	60W	X	X	2.5A	X
Q1J-1060V-48	60W	X	X	X	1.25A
REGULATION LOAD		±5%	±5%	±5%	±5%
RIPPLE AND NOISE		70mV	120mV	240mV	480mV

SPECIFICATION：

TEMPERATURE RANGE：OPERATING 0℃ ~70℃ , STORAGE –20℃ ~80℃

HOLD UP TIME：16mS MINIMUM AT 115V 80% OF FULL LOAD

EFFICIENCY：TYPICAL 87%(+/-2%) for 48V, 85%(+/-2%) for 24V , 85%(+/-2%) for 12V , 80%(+/-2%) for 5V AT 115VAC/230VAC AND FULL LOAD CONDITION

OUTPUT PROTECTION：OPP / OVP / SCP

LEAKAGE CURRENT：3.5mA MAX. AT NOMINAL VOLTAGE 264VAC

DIMENSION：103mm (D) × 52mm (W) × 39mm (H)

THE POWER-SUPPLY IS FOR CHASSIS-ASSEMBLY ONLY AND IS NOT ALLOWED TO BE OPERATED AS STAND-ALONE COMPONENT. FINAL ASSEMBLY HAS TO COMPLY WITH CORRESPONDING EMC- AND SAFETY-REGULATIONS.

INPUT CHARACTERISTICS

VOLTAGE：

90~264VAC FULL RANGE

FREQUENCY：

47~63HZ

INPUT CURRENT：

1.5/1A AT ANY LOW/HIGH RANGE INPUT VOLTAGE

INRUSH CURRENT：

35/70 AMPS @ 115/230V

EMI：

IEC61000-3-2, FCC, CISPR 22(EN 55022)

EMS：

EN 61000-4-2 ESD, EN61000-4-4 EFT, EN61000-4-5 SURGE

SAFETY：

TO MEET UL&CUL, TUV, CCC

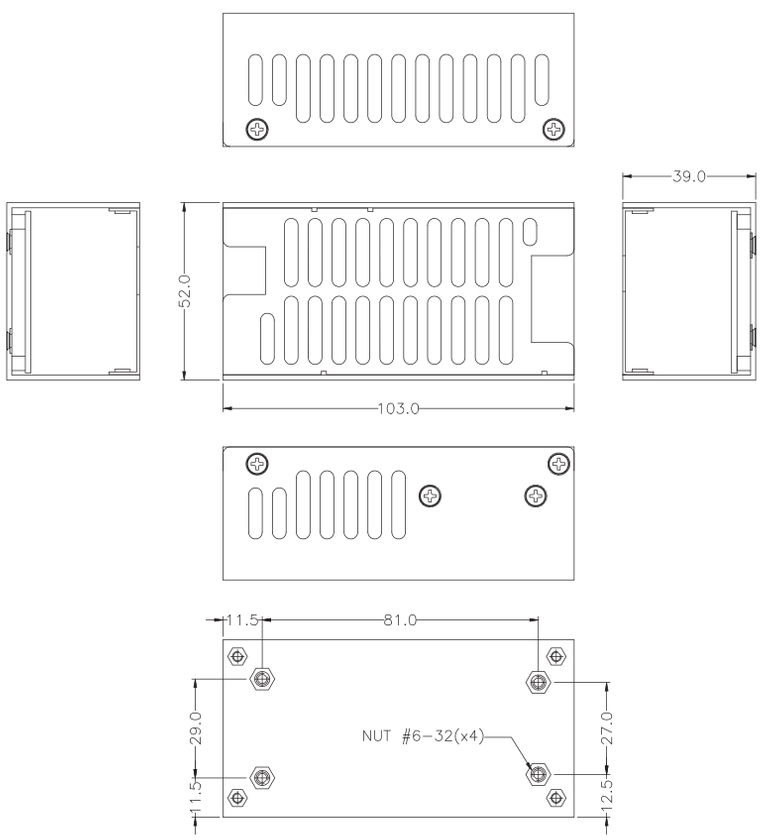

E143756

Q1I-1060V12
Q1I-2050V53
Q1I-2060V123
Q1I-2060V125

INPUT CHARACTERISTICS

VOLTAGE：

90~264VAC FULL RANGE

FREQUENCY：

47~63HZ

INPUT CURRENT：

1.5/1A AT ANY LOW/HIGH RANGE INPUT VOLTAGE

INRUSH CURRENT：

35/70 AMPS @115/230 VAC

EMI：

IEC61000-3-2, FCC, CISPR 22(EN 55022)

EMS：

EN 61000-4-2 ESD, EN61000-4-4 EFT, EN61000-4-5 SURGE

SAFETY：

TO MEET UL, CUL, TUV, CCC

E143756

OUTPUT CHARACTERISTICS

MODEL	WATTAGE	OUTPUT					
		+5V	+12V	+3.3V	-5V	-12V	+5VSB
Q1I-1060V12	60W	X	5A	X	X	X	X
REGULATION LOAD		X	±5%	X	X	X	X
RIPPLE AND NOISE		X	120mV	X	X	X	X
Q1I-2050V53	50W	10A	X	6A	X	X	X
REGULATION LOAD		±5%	X	±5%	X	X	X
RIPPLE AND NOISE		50mV	X	50mV	X	X	X
Q1I-2060V123	60W	X	5A	6A	X	X	X
REGULATION LOAD		X	±5%	±5%	X	X	X
RIPPLE AND NOISE		X	120mV	50mV	X	X	X
Q1I-2060V125	60W	6A	5A	X	X	X	X
REGULATION LOAD		±5%	±5%	X	X	X	X
RIPPLE AND NOISE		50mV	120mV	X	X	X	X

SPECIFICATION：

TEMPERATURE RANGE：OPERATING 0℃ ~ 70℃ , STORAGE–20℃ ~80℃

HOLD UP TIME：16mS MINIMUM AT 115V 80% OF FULL LOAD

EFFICIENCY：79% (+/-2%)-Q1I-2050V53, 230VAC AND LOAD CONDITION 81% (+/-2%)-Q1I-2060V123/Q1I-2060125/Q1I-1060V12/@ 115/230VAC AND LOAD CONDITION：5V/6.04A, 3.3V/6A- Q1I-2050V53, 12V/3.35A, 3.3V/6A- Q1I-2060V123, 12V/2.5A 5V/6A -Q1I-2060V125

OUTPUT PROTECTION：OPP / OVP / SCP

LEAKAGE CURRENT：3.5mA MAX. AT NOMINAL VOLTAGE 264VAC

DIMENSION：114.3mm (D) × 50.5mm (W) × 38mm (H)

THE POWER-SUPPLY IS FOR CHASSIS-ASSEMBLY ONLY AND IS NOT ALLOWED TO BE OPERATED AS STAND-ALONE COMPONENT. FINAL ASSEMBLY HAS TO COMPLY WITH CORRESPONDING EMC- AND SAFETY-REGULATIONS.

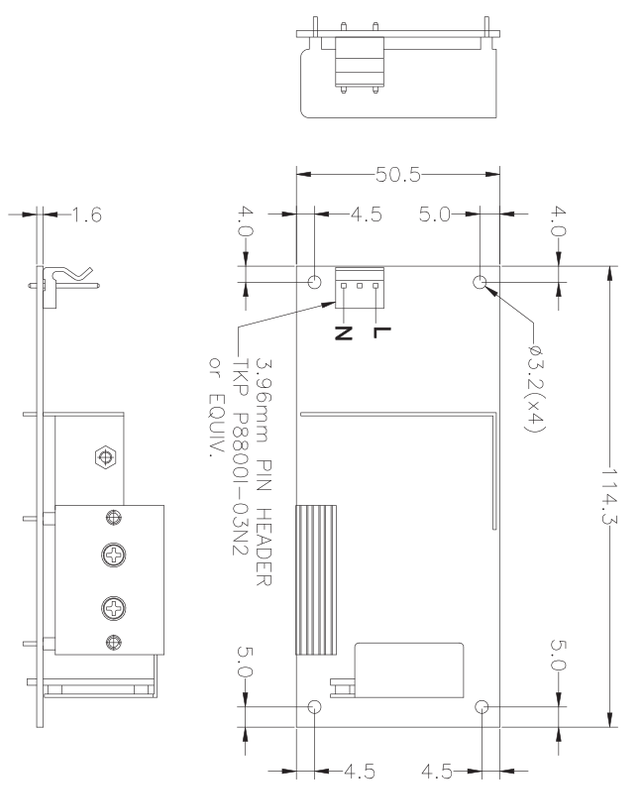

Q1H-5060V

OUTPUT CHARACTERISTICS

MODEL	WATTAGE	OUTPUT					
		+5V	+12V	+3.3V	-5V	-12V	+5VSB
Q1H-5060V	60W	7A	5A	6A	X	0.3A	4A
REGULATION LOAD		±5%	±5%	±5%	X	±10%	±5%
RIPPLE AND NOISE		50mV	120mV	50mV	X	120mV	50mV

REMARKS：
+5V AND +3.3V TOTAL OUTPUT MAX：40W (WITH 8 CFM)
+5V AND +3.3V TOTAL OUTPUT MAX：30W (WITHOUT FAN)

SPECIFICATION：

TEMPERATURE RANGE：OPERATING 0℃ ~70℃ , STORAGE –20℃ ~80℃

HOLD UP TIME：16mS MINIMUM AT 115V 80% OF FULL LOAD

EFFICIENCY：80%±2% TYPICAL · AT FULL LOAD 115VAC

POWER GOOD SIGNAL：ON DELAY 100mS TO 550mS · OFF DELAY 1mS

OUTPUT PROTECTION：OPP / OVP / SCP

LEAKAGE CURRENT：3.5mA MAX. AT NOMINAL VOLTAGE 264VAC

DIMENSION：126mm (D) × 55mm (W) × 39mm (H)

THE POWER-SUPPLY IS FOR CHASSIS-ASSEMBLY ONLY AND IS NOT ALLOWED TO BE OPERATED AS STAND-ALONE COMPONENT. FINAL ASSEMBLY HAS TO COMPLY WITH CORRESPONDING EMC- AND SAFETY-REGULATIONS.

INPUT CHARACTERISTICS

VOLTAGE：

90~264VAC FULL RANGE

FREQUENCY：

47~63HZ

INPUT CURRENT：

1.5/1A AT ANY LOW/HIGH RANGE INPUT VOLTAGE

INRUSH CURRENT：

35/70 AMPS @115/230 VAC

EMI：

IEC61000-3-2, FCC, CISPR 22(EN 55022)

EMS：

EN 61000-4-2 ESD, EN61000-4-4 EFT, EN61000-4-5 SURGE

SAFETY：

TO MEET UL&CUL, TUV, CCC

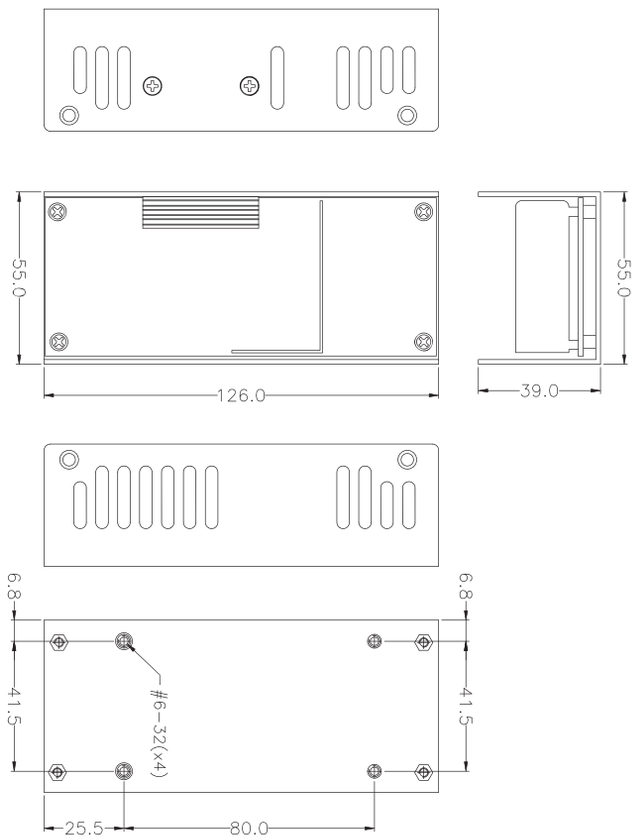

E143756

Q1Q-1060V12

OUTPUT CHARACTERISTICS

MODEL	WATTAGE	OUTPUT					
		+5V	+12V	+3.3V	-5V	-12V	+5VSB
Q1Q-1060V12	60W	X	5A	X	X	X	X
REGULATION LOAD		X	±5%	X	X	X	X
RIPPLE AND NOISE		X	120mV	X	X	X	X

REMARKS：
TOTAL POWER:60W (MAX)

SPECIFICATION：

TEMPERATURE RANGE：OPERATING -40℃ ~ 70℃ , STORAGE –40℃ ~80℃

HOLD UP TIME：16mS MINIMUM AT 115V 80% OF FULL LOAD

EFFICIENCY：82% AT 115/230VAC FULL LOAD

OUTPUT PROTECTION：OPP / OVP / SCP

LEAKAGE CURRENT：3.5mA MAX. AT NOMINAL VOLTAGE 240VAC

DIMENSION： 137mm (D) × 50mm (W) × 32mm (H)

THE POWER-SUPPLY IS FOR CHASSIS-ASSEMBLY ONLY AND IS NOT ALLOWED TO BE OPERATED AS STAND-ALONE COMPONENT. FINAL ASSEMBLY HAS TO COMPLY WITH CORRESPONDING EMC- AND SAFETY-REGULATIONS.

INPUT CHARACTERISTICS

VOLTAGE：

90~264VAC FULL RANGE

FREQUENCY：

47~63HZ

INPUT CURRENT：

2/1A AT ANY LOW/HIGH RANGE INPUT VOLTAGE

INRUSH CURRENT：

35/70A AMPS @115/230 VAC

EMI：

IEC61000-3-2, FCC, CISPR 22(EN 55022)

EMS：

EN 61000-4-2 ESD, EN61000-4-4 EFT, EN61000-4-5 SURGE

SAFETY：

TO MEET UL, CUL, TUV, CCC

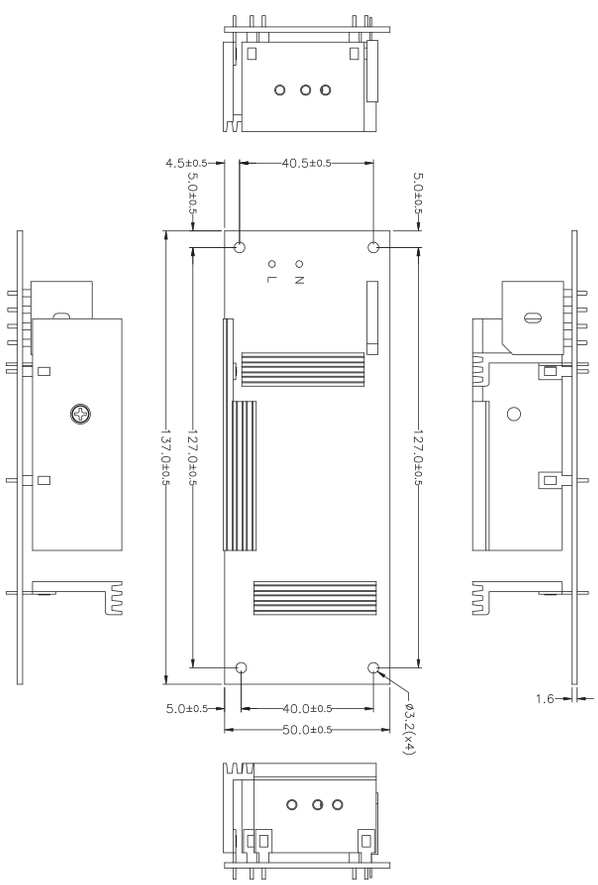

Q1O-1060V12

OUTPUT CHARACTERISTICS

MODEL	WATTAGE	OUTPUT					
		+5V	+12V	+3.3V	-5V	-12V	+5VSB
Q1O-1060V-12	60W	X	5A	X	X	X	X
	75W peak	X	6.25A	X	X	X	X
REGULATION LOAD		X	±5%	X	X	X	X
RIPPLE AND NOISE		X	120mV	X	X	X	X

SPECIFICATION：

TEMPERATURE RANGE：OPERATING 0℃ ~ 60℃ , STORAGE –20℃ ~80℃

HOLD UP TIME：16mS MINIMUM AT 115V 80% OF FULL LOAD

EFFICIENCY：82% AT 115/230VAC FULL LOAD

OUTPUT PROTECTION：OPP / OVP / SCP

LEAKAGE CURRENT：3.5mA MAX. AT NOMINAL VOLTAGE 240VAC

DIMENSION： 127mm (D) × 56mm (W) × 32mm (H)

THE POWER-SUPPLY IS FOR CHASSIS-ASSEMBLY ONLY AND IS NOT ALLOWED TO BE OPERATED AS STAND-ALONE COMPONENT. FINAL ASSEMBLY HAS TO COMPLY WITH CORRESPONDING EMC- AND SAFETY-REGULATIONS.

INPUT CHARACTERISTICS

VOLTAGE：

90~264VAC FULL RANGE

FREQUENCY：

47~63HZ

INPUT CURRENT：

2/1A AT ANY LOW/HIGH RANGE INPUT VOLTAGE

INRUSH CURRENT：

30 AMPS @230 VAC

EMI：

IEC61000-3-2, FCC, CISPR 22(EN 55022)

EMS：

EN 61000-4-2 ESD, EN61000-4-4 EFT, EN61000-4-5 SURGE

SAFETY：

TO MEET UL, CUL, TUV, CCC

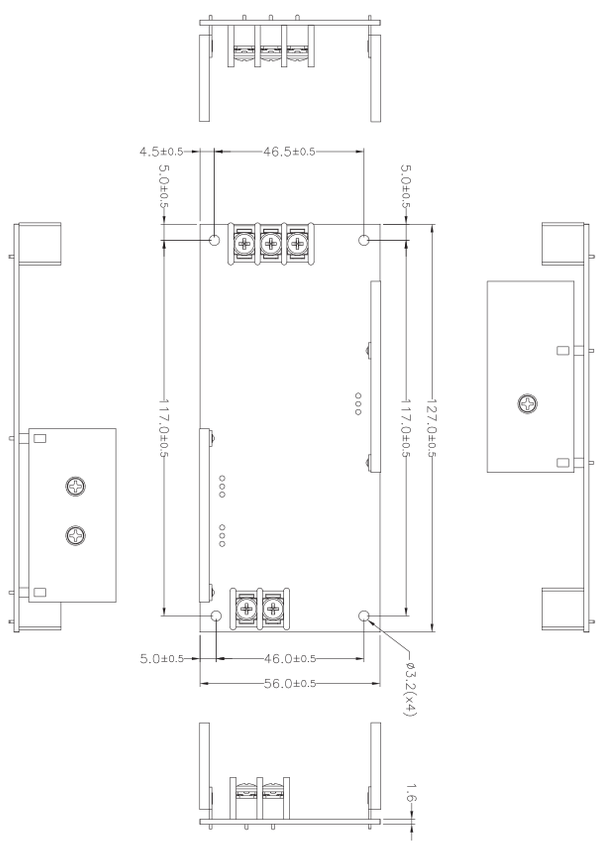

OUTPUT CHARACTERISTICS

MODEL	WATTAGE	OUTPUT		
		+12V	+24V	+48V
Q1F-1150V12	150W	12.5A	X	X
Q1F-1150V24	150W	X	6.25A	X
Q1F-1150V48	150W	X	X	3.125A
REGULATION LOAD		±5%	±5%	±5%
RIPPLE AND NOISE		120mV	240mV	480mV

Q1F-1150V12
Q1F-1150V24
Q1F-1150V48

SPECIFICATION：

TEMPERATURE RANGE：OPERATING 0℃ ~70℃ , STORAGE –20℃ ~80℃

HOLD UP TIME：32mS MINIMUM AT 115V OF FULL LOAD

EFFICIENCY：82%±2% TYPICAL · AT FULL LOAD 115VAC/230VAC AND LOAD CONDITION 12V/12.5A-Q1F-1150V12 · 83%±2% TYPICAL · AT 115Vin AND LOAD CONDITION 24V/6.25A-Q1F-1150V24 ; 82%±2% TYPICAL · AT 115Vin AND LOAD 48V/3.125A-Q1F-1150V48

OUTPUT PROTECTION：OPP / OVP / SCP

LEAKAGE CURRENT：3mA MAX. AT NOMINAL VOLTAGE 264VAC

DIMENSION：125mm (D) × 76.2mm(W) × 39mm (H)

THE POWER-SUPPLY IS FOR CHASSIS-ASSEMBLY ONLY AND IS NOT ALLOWED TO BE OPERATED AS STAND-ALONE COMPONENT. FINAL ASSEMBLY HAS TO COMPLY WITH CORRESPONDING EMC- AND SAFETY-REGULATIONS.

INPUT CHARACTERISTICS

VOLTAGE：

90~264VAC FULL RANGE

FREQUENCY：

47~63HZ

INPUT CURRENT：

2.5/1A AT ANY LOW/HIGH RANGE INPUT VOLTAGE ; 2/1A AT ANY LOW/HIGH RANGE INPUT VOLTAGE (Q1F-1150V48)

INRUSH CURRENT：

35/70 AMPS @115/230 VAC

POWER FACTOR CORRECTION

PFC CAN REACH THE TARGET OF 95% AT 115/230VAC, FULL LOAD

EMI：

IEC61000-3-2, FCC, CISPR 22(EN 55022)

EMS：

EN 61000-4-2 ESD, EN61000-4-4 EFT, EN61000-4-5 SURGE

SAFETY：

TO MEET UL&CUL, TUV, CCC

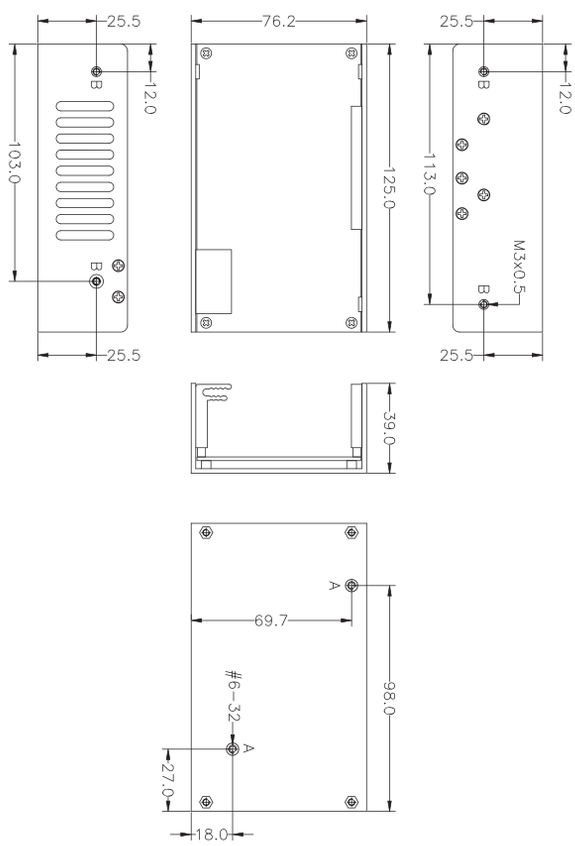

E143756

Q1F-2150V123
Q1F-2150V125

OUTPUT CHARACTERISTICS

MODEL	WATTAGE	OUTPUT		
		+5V	+12V	+3.3V
Q1F-2150V123	150W	X	12.5A	8A
Q1F-2150V125	150W	8A	12.5A	X
REGULATION LOAD		±5%	±5%	±5%
RIPPLE AND NOISE		50mV	120mV	50mV

SPECIFICATION：

TEMPERATURE RANGE：OPERATING 0℃ ~70℃ , STORAGE –20℃ ~80℃

HOLD UP TIME：32mS MINIMUM AT 115V FULL LOAD

EFFICIENCY：82%±2% TYPICAL · AT FULL LOAD 115VAC/230VAC AND LOAD CONDITOIN：12V/12.5A

OUTPUT PROTECTION：OPP / OVP / SCP

LEAKAGE CURRENT:3mA MAX. AT NOMINAL VOLTAGE 264VAC

DIMENSION：125mm (D) × 76.2mm (W) × 39mm (H)

THE POWER-SUPPLY IS FOR CHASSIS-ASSEMBLY ONLY AND IS NOT ALLOWED TO BE OPERATED AS STAND-ALONE COMPONENT. FINAL ASSEMBLY HAS TO COMPLY WITH CORRESPONDING EMC- AND SAFETY-REGULATIONS.

INPUT CHARACTERISTICS

VOLTAGE：

90~264VAC FULL RANGE

FREQUENCY：

47~63HZ

INPUT CURRENT：

2.5/1A AT ANY LOW/HIGH RANGE INPUT VOLTAGE

INRUSH CURRENT：

35/70 AMPS @115/230 VAC

POWER FACTOR CORRECTION

PFC CAN REACH THE TARGET OF 95% AT 115/230VAC, FULL LOAD

EMI：

IEC61000-3-2, FCC, CISPR 22(EN 55022)

EMS：

EN 61000-4-2 ESD, EN61000-4-4 EFT, EN61000-4-5 SURGE

SAFETY：

TO MEET UL&CUL, TUV, CCC

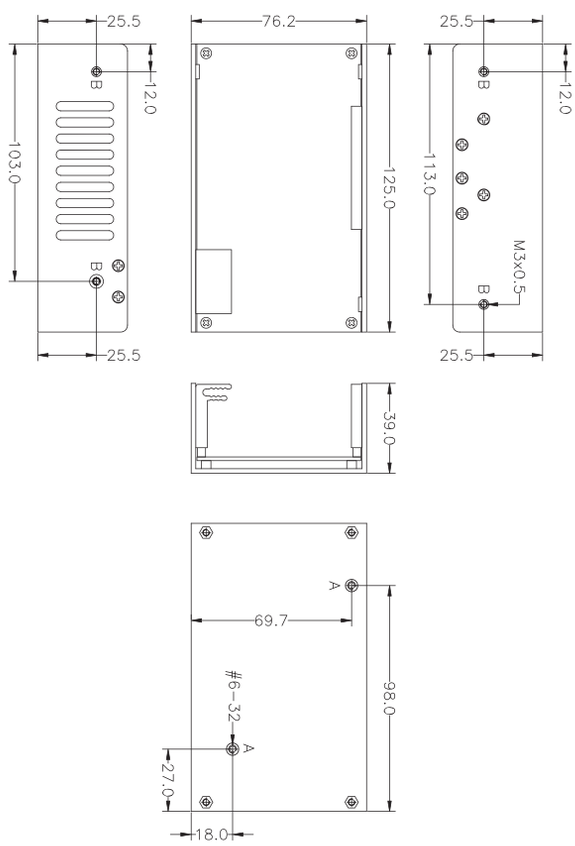

E143756

OUTPUT CHARACTERISTICS

MODEL	WATTAGE	OUTPUT		
		+5V	+12V	+24V
Q1F-3150V	150W	2A	12.5A	1.5A
REGULATION LOAD		±5%	±5%	±5%
RIPPLE AND NOISE		50mV	120mV	240mV

Q1F-3150V

SPECIFICATION：

TEMPERATURE RANGE：OPERATING 0℃ ~ 70℃ , STORAGE –20℃ ~80℃

HOLD UP TIME：32mS MINIMUM AT 115V FULL LOAD

EFFICIENCY：82%±2% TYPICAL · AT FULL LOAD 115VAC/230VAC AND LOAD CONDITOIN：12V/8.6A, 5V/2A, 24V/1.5A

OUTPUT PROTECTION：OPP / OVP / SCP

LEAKAGE CURRENT：3mA MAX. AT NOMINAL VOLTAGE 264VAC

DIMENSION： 125mm (D) × 76.2mm (W) × 39mm (H)

THE POWER-SUPPLY IS FOR CHASSIS-ASSEMBLY ONLY AND IS NOT ALLOWED TO BE OPERATED AS STAND-ALONE COMPONENT. FINAL ASSEMBLY HAS TO COMPLY WITH CORRESPONDING EMC- AND SAFETY-REGULATIONS.

INPUT CHARACTERISTICS

VOLTAGE：

90~264VAC FULL RANGE

FREQUENCY：

47~63HZ

INPUT CURRENT：

2/1A AT ANY LOW/HIGH RANGE INPUT VOLTAGE

INRUSH CURRENT：

35/70 AMPS @115/230 VAC

POWER FACTOR CORRECTION

PFC CAN REACH THE TARGET OF 95% AT 115/230VAC, FULL LOAD.

EMI：

IEC61000-3-2, FCC, CISPR 22(EN 55022)

EMS：

EN 61000-4-2 ESD, EN61000-4-4 EFT, EN61000-4-5 SURGE

SAFETY：

TO MEET UL&CUL, TUV, CCC

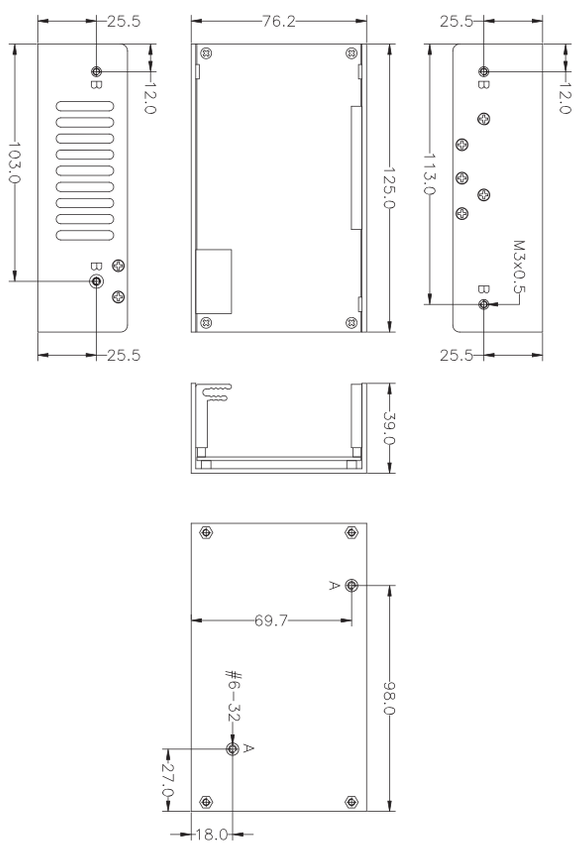

OUTPUT CHARACTERISTICS

MODEL	WATTAGE	OUTPUT					
		+5V	+12V	+3.3V	-5V	-12V	+5VSB
Q1D-5120V	120W	14A	8A	12A	X	0.5A	1.5A
REGULATION LOAD		±5%	±5%	±5%	X	±10%	±5%
RIPPLE AND NOISE		50mV	120mV	50mV	X	120mV	50mV

REMARKS：
+5V AND +3.3V TOTAL OUTPUT MAX：70W (WITH 20 CFM)
+5V AND +3.3V TOTAL OUTPUT MAX：50W (WITHOUT FAN)

Q1D-5120V

SPECIFICATION：

TEMPERATURE RANGE：OPERATING 0℃ ~50℃ , STORAGE –20℃ ~80℃

HOLD UP TIME：41mS MINIMUM AT 115V FULL LOAD

EFFICIENCY：82%(±2%) TYPICAL @ FULL LOAD 230VAC IN AND LOAD CONDITTION:12V/4.46A;5V/4.98A;3.3V/4.27A;-12V/0.39A;5VSB/0.56A

OUTPUT PROTECTION：OPP / OVP / SCP

REMOTE ON/OFF CONTROL

DIMENSION：165mm (D) x 83.8mm (W) x 39mm (H)

THE POWER-SUPPLY IS FOR CHASSIS-ASSEMBLY ONLY AND IS NOT ALLOWED TO BE OPERATED AS STAND-ALONE COMPONENT. FINAL ASSEMBLY HAS TO COMPLY WITH CORRESPONDING EMC- AND SAFETY-REGULATIONS.

INPUT CHARACTERISTICS

VOLTAGE：

90~264VAC FULL RANGE

FREQUENCY：

47~63HZ

INPUT CURRENT：

2/1A AT ANY LOW/HIGH RANGE INPUT VOLTAGE

INRUSH CURRENT：

35/70 AMPS @115/230 VAC

POWER FACTOR CORRECTION

PFC CAN REACH THE TARGET OF 95% AT 115/230VAC, FULL LOAD.

EMI：

IEC61000-3-2, FCC, CISPR 22(EN 55022)

EMS：

EN 61000-4-2 ESD, EN61000-4-4 EFT, EN61000-4-5 SURGE

SAFETY：

TO MEET UL&CUL, TUV, CCC

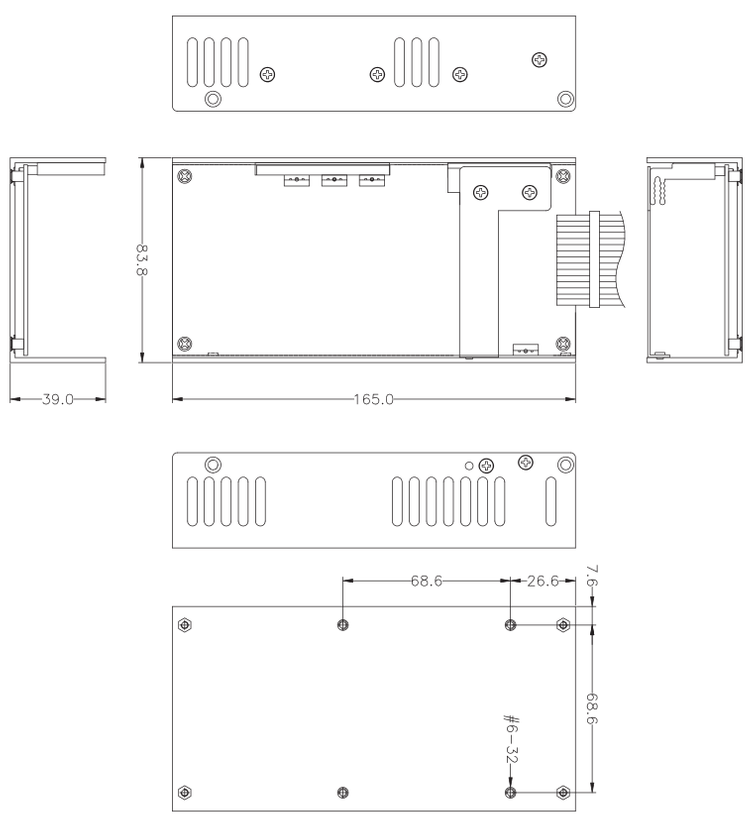

E143756

Q1K-5150V
Q1K-5200V

OUTPUT CHARACTERISTICS

MODEL	WATTAGE	OUTPUT					
		+5V	+12V	+3.3V	-5V	-12V	+5VSB
Q1K-5150V	150W	14A	12A	12A	X	0.5A	3A
Q1K-5200V	200W	14A	15.5A	12A	X	0.5A	3A
REGULATION LOAD		±5%	±5%	±5%	X	±10%	±5%
RIPPLE AND NOISE		50mV	120mV	50mV	X	120mV	50mV

REMARKS：
+5V AND +3.3V TOTAL OUTPUT MAX：70W (WITH 10 CFM)
+5V AND +3.3V TOTAL OUTPUT MAX：50W (WITHOUT FAN)

SPECIFICATION：

TEMPERATURE RANGE：OPERATING 0℃ ~70℃ , STORAGE –20℃ ~80℃

HOLD UP TIME：100mS MINIMUM AT 115V FULL LOAD -Q1K-5150V,
100mS MINIMUM AT 115V 80% LOAD -Q1K-5200V

EFFICIENCY：83% (+/-2%) - Q1K-5150V ; 83% (+/-2%) - Q1K-5200V @ 230VACin AND LOAD CONDITION：12V/7.78A; 5V/5.57A; 3.3V/4.77A; -12V/0.31A; 5VSB/1.87A –Q1K-5150V 12V/11.18A;5V/6.47A;3.3V/5.53A;-12V/0.36A;5Vsb/2.17A–Q1K-5200V

POWER GOOD SIGNAL：ON DELAY 100mS TO 550mS

OUTPUT PROTECTION：OPP / OVP / SCP

LEAKAGE CURRENT：3.5mA MAX. AT NOMINAL VOLTAGE 264VAC

DIMENSION：186mm (D) × 100mm (W) × 39.5mm (H)

THE POWER-SUPPLY IS FOR CHASSIS-ASSEMBLY ONLY AND IS NOT ALLOWED TO BE OPERATED AS STAND-ALONE COMPONENT. FINAL ASSEMBLY HAS TO COMPLY WITH CORRESPONDING EMC- AND SAFETY-REGULATIONS.

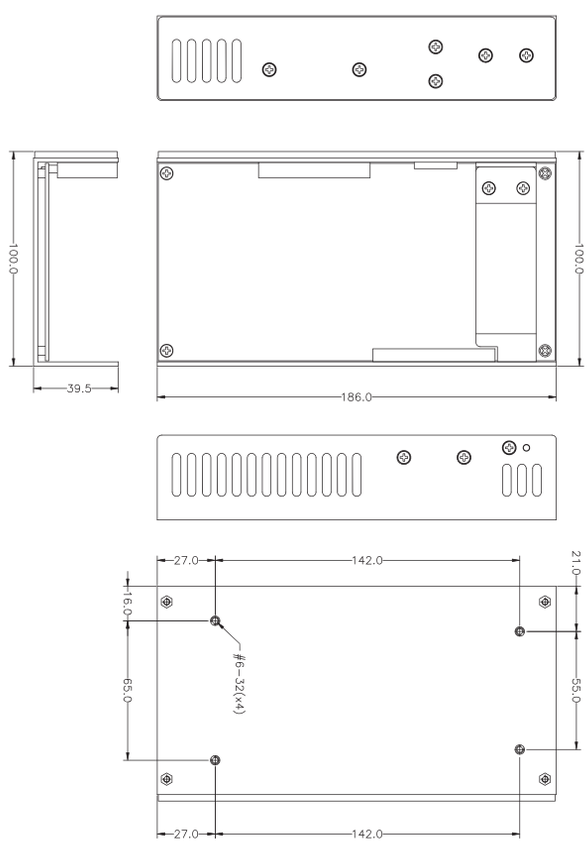

INPUT CHARACTERISTICS

VOLTAGE：

90~264VAC FULL RANGE

FREQUENCY：

47~63HZ

INPUT CURRENT：

WATTAGE	115V	230V
150W	2.5A	1A
200W	3A	1.5A

INRUSH CURRENT：

35/80 AMPS @115/230 VAC

POWER FACTOR CORRECTION

PFC CAN REACH THE TARGET OF 95% AT 115/230VAC, FULL LOAD.

EMI：

IEC61000-3-2, FCC, CISPR 22(EN 55022)

EMS：

EN 61000-4-2 ESD, EN61000-4-4 EFT, EN61000-4-5 SURGE

SAFETY：

TO MEET UL&CUL, TUV, CCC

E143756

Q1N-2400K
Q1N-3400K

OUTPUT CHARACTERISTICS

MODEL	WATTAGE	OUTPUT					
		+5V	+12V	+3.3V	-5V	-12V	+5VSB
Q1N-2400K	400W	X	33.33A	X	X	X	2A
Q1N-3400K	400W	5A	33A	X	X	X	3A
REGULATION LOAD		±5%	±5%	X	X	X	±5%
RIPPLE AND NOISE		X	120mV	X	X	X	50mV

REMARKS：
TOTAL OUTPUT POWER：400W WITH 10CFM AIR FLOW; 250W W/O AIR FLOW

SPECIFICATION：

TEMPERATURE RANGE：OPERATING 0℃ ~ 40℃ , STORAGE –20℃ ~80℃

HOLD UP TIME：16mS MINIMUM AT 115V 80% OF FULL LOAD

EFFICIENCY：90% @ 230VACin AND LOAD CONDITION：12V/32.95A; 5VSB/0.2A

POWER GOOD SIGNAL：ON DELAY 100mS TO 500mS

OUTPUT PROTECTION：OPP / OVP / SCP

REMOTE ON/OFF CONTROL

LEAKAGE CURRENT：3.5mA MAX. AT NOMINAL VOLTAGE 264VAC

DIMENSION： 199mm (D) × 92mm (W) × 43mm (H)

THE POWER-SUPPLY IS FOR CHASSIS-ASSEMBLY ONLY AND IS NOT ALLOWED TO BE OPERATED AS STAND-ALONE COMPONENT. FINAL ASSEMBLY HAS TO COMPLY WITH CORRESPONDING EMC- AND SAFETY-REGULATIONS.

INPUT CHARACTERISTICS

VOLTAGE：

90~264VAC FULL RANGE

FREQUENCY：

47~63HZ

INPUT CURRENT：

6/3A AT ANY LOW/HIGH RANGE INPUT VOLTAGE

INRUSH CURRENT：

30 AMPS @230 VAC (AT 25 DEGREES AMBIENT COLD START)

POWER FACTOR CORRECTION

PFC CAN REACH THE TARGET OF 90% AT 230VAC, FULL LOAD.

EMI：

IEC61000-3-2, FCC, CISPR 22(EN 55022)

EMS：

EN 61000-4-2 ESD, EN61000-4-4 EFT, EN61000-4-5 SURGE

SAFETY：

TO MEET UL&CUL, TUV, CCC

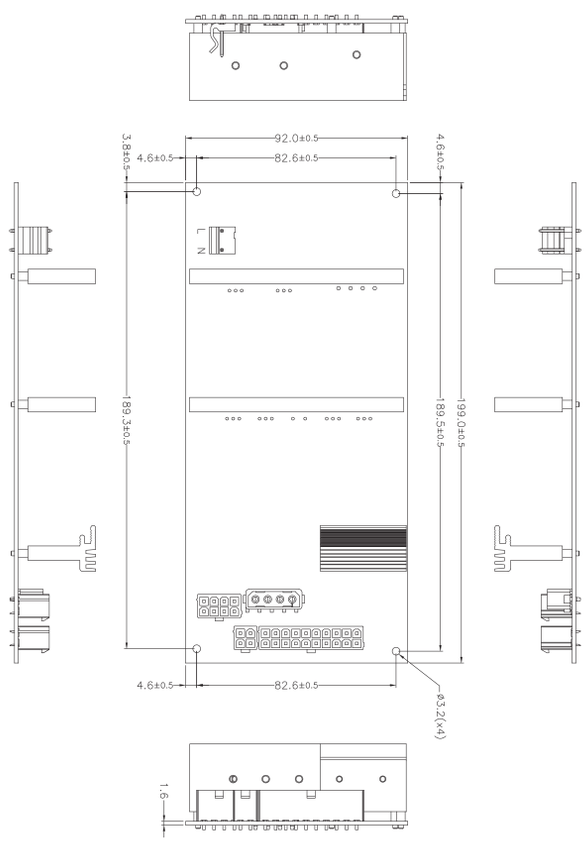

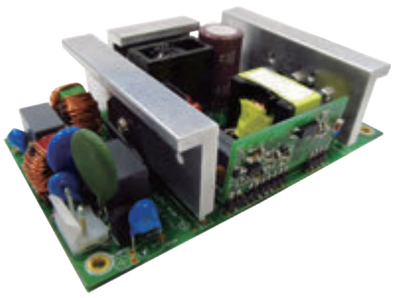

OUTPUT CHARACTERISTICS

MODEL	WATTAGE	OUTPUT		
		+12V	+24V	+48V
Q1S-1150	150W	12.5A	6.25A	3.125A
REGULATION LOAD		±5%	±5%	±5%
RIPPLE AND NOISE		120mV	240mV	480mV

REMARKS :
TOTAL OUTPUT POWER : 150W

Q1S-1150V12
Q1S-1150V24
Q1S-1150V48

SPECIFICATION :

TEMPERATURE RANGE : OPERATING 0°C ~ 40°C , STORAGE –20°C ~80°C

HOLD UP TIME : 16mS MINIMUM AT 115V FULL LOAD

EFFICIENCY : TYPICAL 86% AT 115V, TYPICAL 87% AT 230V

OUTPUT PROTECTION : OPP / OVP / SCP

REMOTE ON/OFF CONTROL

LEAKAGE CURRENT : 3.5mA MAX. AT NOMINAL VOLTAGE 264VAC

DIMENSION : 127mm (D) × 76.2mm (W) × 39.6mm (H)

THE POWER-SUPPLY IS FOR CHASSIS-ASSEMBLY ONLY AND IS NOT ALLOWED TO BE OPERATED AS STAND-ALONE COMPONENT. FINAL ASSEMBLY HAS TO COMPLY WITH CORRESPONDING EMC- AND SAFETY-REGULATIONS.

INPUT CHARACTERISTICS

VOLTAGE :

90~264VAC FULL RANGE

FREQUENCY :

47~63HZ

INPUT CURRENT :

2A/1A AT ANY LOW/HIGH RANGE INPUT VOLTAGE

INRUSH CURRENT :

40/80 AMPS @115/230 VAC (AT 25 DEGREES AMBIENT COLD START)

POWER FACTOR CORRECTION

PFC CAN REACH THE TARGET OF 95% AT 110VAC, FULL LOAD.

EMI :

IEC61000-3-2, FCC, CISPR 22(EN 55022)

EMS :

EN 61000-4-2 ESD, EN61000-4-4 EFT, EN61000-4-5 SURGE

SAFETY :

TO MEET UL&CUL, TUV, CCC

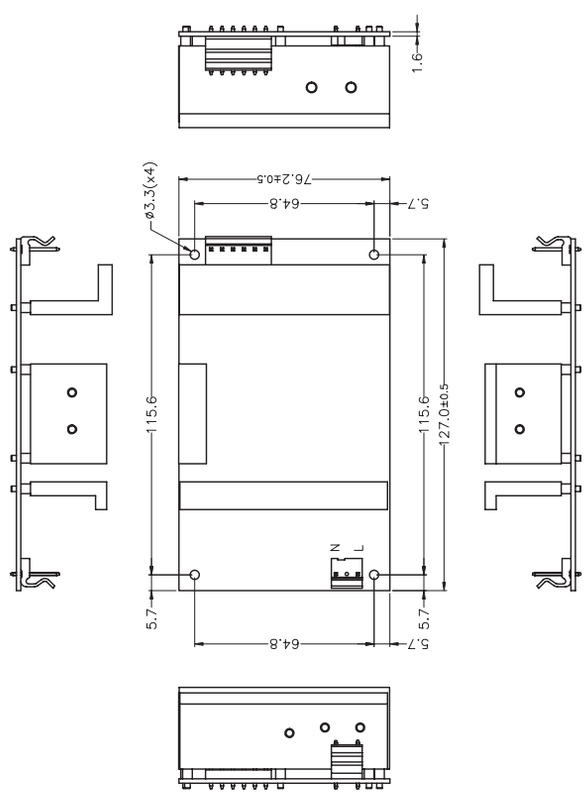

G1X-1060V12

OUTPUT CHARACTERISTICS

MODEL	WATTAGE	OUTPUT
		+12V
G1X-1060V12	60W	5A
REGULATION LOAD		±5%
RIPPLE AND NOISE		120mV

REMARKS：
OUTPUT MAX：60W

SPECIFICATION：

TEMPERATURE RANGE：OPERATING 0℃ ~70℃ , STORAGE -20℃ ~80℃

HOLD UP TIME：16mS MINIMUM AT 115V 80% OF FULL LOAD

EFFICIENCY：80%±2% TYPICAL · AT FULL LOAD 115VAC/230VAC

LEAKAGE CURRENT：3.5mA MAX. AT NOMINAL VOLTAGE 264VAC

OUTPUT PROTECTION：OPP / OVP / SCP

DIMENSION：135mm (D) × 50.5mm (W) × 38mm (H)

THE POWER-SUPPLY IS FOR CHASSIS-ASSEMBLY ONLY AND IS NOT ALLOWED TO BE OPERATED AS STAND-ALONE COMPONENT. FINAL ASSEMBLY HAS TO COMPLY WITH CORRESPONDING EMC- AND SAFETY-REGULATIONS.

INPUT CHARACTERISTICS

VOLTAGE：

90~264VAC FULL RANGE

FREQUENCY：

47~63HZ

INPUT CURRENT：

2A @ 115 VAC, 1A @ 230 VAC

INRUSH CURRENT：

35A MAX.@115 VAC PER MODULE, 70A MAX. @ 230 VAC

PER MODULE

EMI：

IEC61000-3-2, FCC, CISPR 22(EN 55022)

EMS：

EN 61000-4-2 ESD, EN61000-4-4 EFT, EN61000-4-5 SURGE

SAFETY：

TO MEET UL, CUL, TUV, CCC

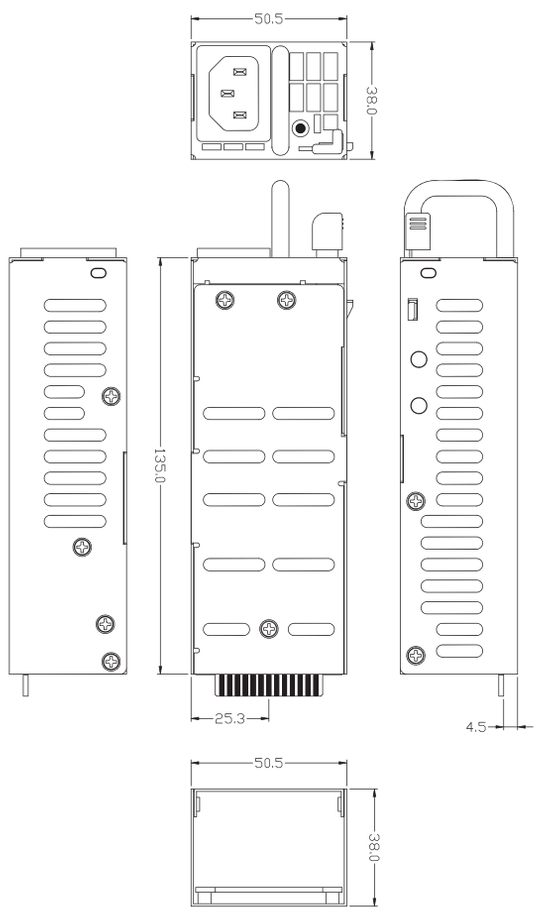

E143756

G1X2-1060V12

OUTPUT CHARACTERISTICS

MODEL	WATTAGE	OUTPUT
		+12V
G1X2-1060V12	60W	5A
REGULATION LOAD		±5%
RIPPLE AND NOISE		120mV

REMARKS：
OUTPUT MAX：60W

SPECIFICATION：

TEMPERATURE RANGE：OPERATING 0℃ ~70℃ , STORAGE -20℃ ~80℃

HOLD UP TIME：16mS MINIMUM AT 115V 80% OF FULL LOAD

EFFICIENCY：78%±2% TYPICAL · AT FULL LOAD 115VAC/230VAC

OUTPUT PROTECTION：OPP / OVP / SCP

LEAKAGE CURRENT：3.5mA MAX. AT NOMINAL VOLTAGE 264VAC

WARNING METHOD：AUDIO ALARM (BUZZER SOUND, RESETABLE), FALUT LED, TTL

DIMENSION：190mm (D) × 106mm (W) × 39.5mm (H)

THE POWER-SUPPLY IS FOR CHASSIS-ASSEMBLY ONLY AND IS NOT ALLOWED TO BE OPERATED AS STAND-ALONE COMPONENT. FINAL ASSEMBLY HAS TO COMPLY WITH CORRESPONDING EMC- AND SAFETY-REGULATIONS.

INPUT CHARACTERISTICS

VOLTAGE：

90~264VAC FULL RANGE

FREQUENCY：

47~63HZ

INPUT CURRENT：

2A @ 115 VAC, 1A @ 230 VAC

INRUSH CURRENT：

35A MAX.@115 VAC PER MODULE, 70A MAX. @ 230 VAC

PER MODULE

EMI：

IEC61000-3-2, FCC, CISPR 22(EN 55022)

EMS：

EN 61000-4-2 ESD, EN61000-4-4 EFT, EN61000-4-5 SURGE

SAFETY：

TO MEET UL, CUL, TUV, CCC

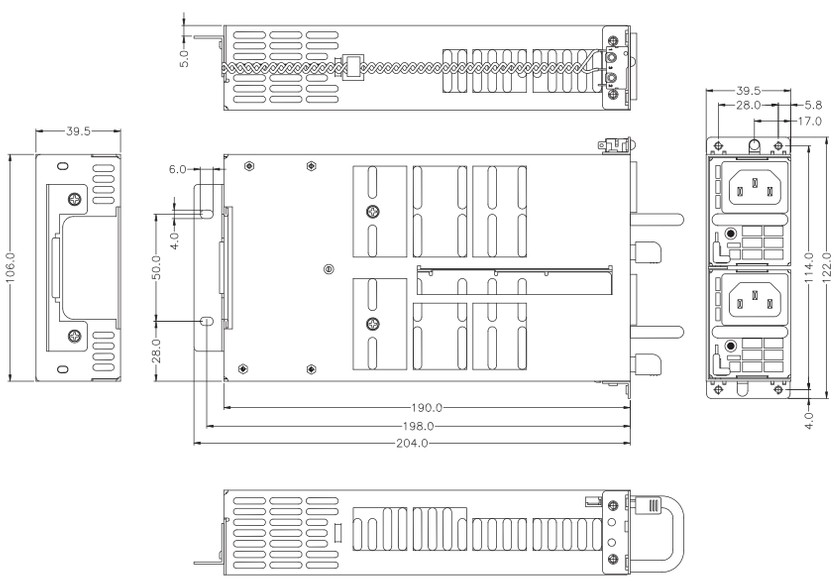

E143756

G1X2-5060V

OUTPUT CHARACTERISTICS

MODEL	WATTAGE	OUTPUT					
		+5V	+12V	+3.3V	-5V	-12V	+5VSB
G1X2-5060V	60W	6A	5A	6A	X	0.3A	3A
REGULATION LOAD		±5%	±5%	±5%	X	±10%	±5%
RIPPLE AND NOISE		50mV	120mV	50mV	X	120mV	50mV

REMARKS：
+5V AND +3.3V TOTAL OUTPUT MAX：30W; TOTAL OUTPUT MAX：60W

SPECIFICATION：

TEMPERATURE RANGE：OPERATING 0℃ ~ 70℃ , STORAGE -20℃ ~80℃

HOLD UP TIME：16mS MINIMUM AT 115V 75% OF FULL LOAD

EFFICIENCY：TYPICAL 76%±2% AT FULL LOAD 115VAC/230VAC

OUTPUT PROTECTION：OPP / OVP / SCP

LEAKAGE CURRENT：3.5 mA. MAX. AT NOMINAL VOLTAGE 264VAC

WARNING METHOD：AUDIO ALARM (BUZZER SOUND, RESETABLE), FALUT LED, TTL

DIMENSION：190mm (D) × 106mm (W) × 39.5mm (H)

THE POWER-SUPPLY IS FOR CHASSIS-ASSEMBLY ONLY AND IS NOT ALLOWED TO BE OPERATED AS STAND-ALONE COMPONENT. FINAL ASSEMBLY HAS TO COMPLY WITH CORRESPONDING EMC- AND SAFETY-REGULATIONS.

INPUT CHARACTERISTICS

VOLTAGE：

90~264VAC FULL RANGE

FREQUENCY：

47~63HZ

INPUT CURRENT：

2A @115 VAC, 1A @230 VAC

INRUSH CURRENT：

35A MAX.@115 VAC PER MODULE, 70A MAX. @ 230 VAC

PER MODULE

EMI：

IEC61000-3-2, FCC, CISPR 22(EN 55022)

EMS：

EN 61000-4-2 ESD, EN61000-4-4 EFT, EN61000-4-5 SURGE

SAFETY：

TO MEET UL, CUL, TUV, CCC

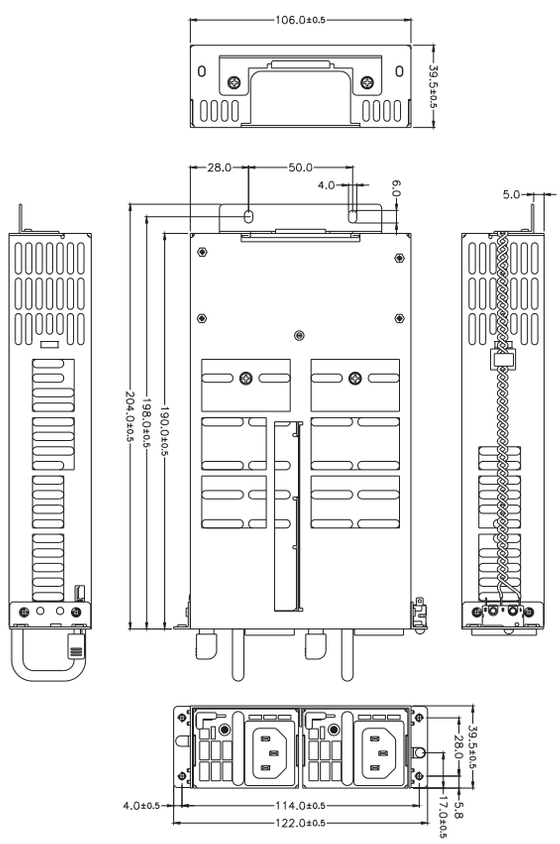

E143756

DG1X-1060V12

OUTPUT CHARACTERISTICS

MODEL	WATTAGE	OUTPUT
		+12V
DG1X-1060V12	60W	5A
REGULATION LOAD		±5%
RIPPLE AND NOISE		120mV

REMARKS：
OUTPUT MAX：60W

SPECIFICATION：

TEMPERATURE RANGE：OPERATING 0℃～ 70℃ , STORAGE -20℃ ~80℃

HOLD UP TIME：16mS MINIMUM AT 115V 80% OF FULL LOAD

EFFICIENCY：80%±2% TYPICAL · AT FULL LOAD -48VDC AND LOAD CONDITION：12V/5A

OUTPUT PROTECTION：OPP / OVP / SCP

WARNING METHOD：AUDIO ALARM (BUZZER SOUND, RESETABLE), FALUT LED, TTL

DIMENSION：135mm (D) × 50.5mm (W) × 38mm (H)

THE POWER-SUPPLY IS FOR CHASSIS-ASSEMBLY ONLY AND IS NOT ALLOWED TO BE OPERATED AS STAND-ALONE COMPONENT. FINAL ASSEMBLY HAS TO COMPLY WITH CORRESPONDING EMC- AND SAFETY-REGULATIONS.

INPUT CHARACTERISTICS

VOLTAGE：

39-72VDC FULL RANGE

FREQUENCY：

0HZ(DC)

STEADY-STATE CURRENT

2/1A AT ANY LOW/HIGH RANGE INPUT VOLTAGE

INRUSH CURRENT：

3AMPS @ 48VDC HIGH FREQUENCY PEAK AMPLITUDES LASTING LESS THAN 100US (AT 25 DEGREES AMBIENT COLD START)

EMI：

IEC61000-3-2, FCC, CISPR 22(EN 55022)

EMS：

EN 61000-4-2 ESD, EN61000-4-4 EFT, EN61000-4-5 SURGE

SAFETY：

TO MEET UL&CUL, TUV, CCC

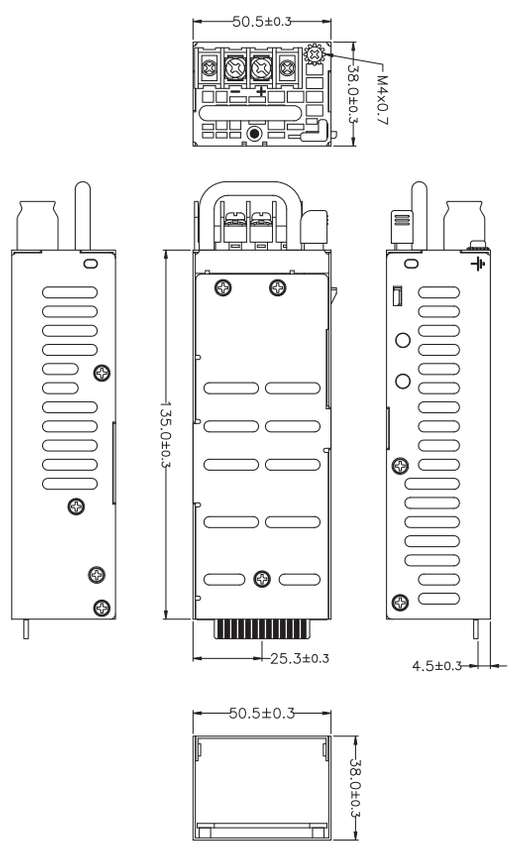

E143756

OUTPUT CHARACTERISTICS

MODEL	WATTAGE	OUTPUT					
		+5V	+12V	+3.3V	-5V	-12V	+5VSB
DG1X2-1060V12	60W	X	5A	X	X	X	X
REGULATION LOAD		X	±5%	X	X	X	X
RIPPLE AND NOISE		X	120mV	X	X	X	X

REMARKS：
MAXIMUM OUTPUT POWER：60W

DG1X2-1060V12

SPECIFICATION：

TEMPERATURE RANGE：OPERATING 0℃ ~ 70℃ , STORAGE -20℃ ~80℃

HOLD UP TIME：WHEN POWER SHUTDOWN DC OUTPUT 5V MUST BE MAINTAIN 1mS IN REGULATION LIMIT AT -48V

EFFICIENCY：78%±2% TYPICAL · AT FULL LOAD -48VDC

OUTPUT PROTECTION：OPP / OVP / SCP

WARNING METHOD：AUDIO ALARM (BUZZER SOUND, RESETABLE), FALUT LED, TTL

DIMENSION：190mm (D) × 106mm (W) × 39.5mm (H)

THE POWER-SUPPLY IS FOR CHASSIS-ASSEMBLY ONLY AND IS NOT ALLOWED TO BE OPERATED AS STAND-ALONE COMPONENT. FINAL ASSEMBLY HAS TO COMPLY WITH CORRESPONDING EMC- AND SAFETY-REGULATIONS.

INPUT CHARACTERISTICS

VOLTAGE：

39-72VDC FULL RANGE

STEADY-STATE CURRENT

2/1A AT ANY LOW/HIGH RANGE INPUT VOLTAGE

INRUSH CURRENT：

3AMPS @ 48VDC HIGH FREQUENCY PEAK AMPLITUDES LASTING LESS THAN 100US (AT 25 DEGREES AMBIENT COLD START)

EMI：

IEC61000-3-2, FCC, CISPR 22(EN 55022)

EMS：

EN 61000-4-2 ESD, EN61000-4-4 EFT, EN61000-4-5 SURGE

SAFETY：

UL&CUL, TUV, CCC

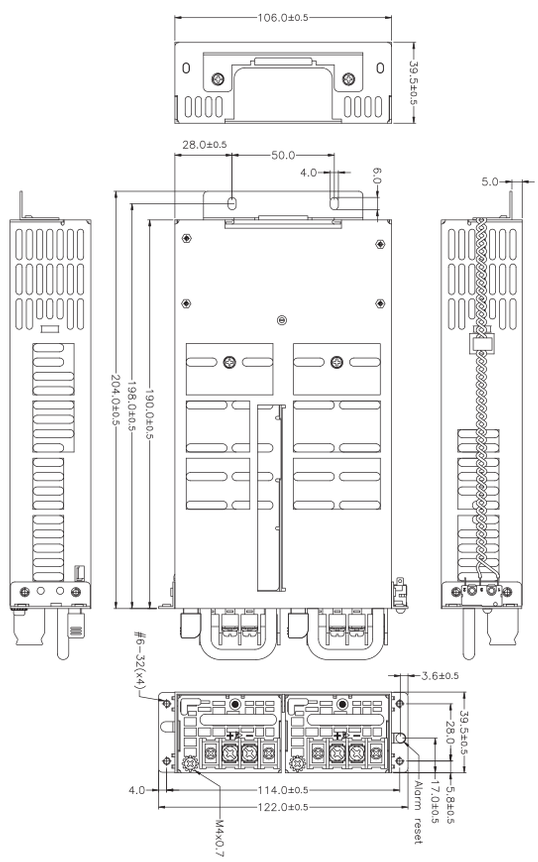

E143756

OUTPUT CHARACTERISTICS

MODEL	WATTAGE	OUTPUT					
		+5V	+12V	+3.3V	-5V	-12V	+5VSB
DG1X2-5060V	60W	6A	5A	6A	X	0.3A	3A
REGULATION LOAD		±5%	±5%	±5%	X	±10%	±5%
RIPPLE AND NOISE		50mV	120mV	50mV	X	120mV	50mV

REMARKS：
+5V AND +3.3V TOTAL OUTPUT MAX：30W
MAXIMUM OUTPUT POWER：60W

DG1X2-5060V

SPECIFICATION：

TEMPERATURE RANGE：OPERATING 0℃～ 70℃ , STORAGE -20℃ ~80℃

HOLD UP TIME：WHEN POWER SHUTDOWN, DC OUTPUT MUST BE MAINTAIN 1mS IN REGULATION LIMIT AT -48V

EFFICIENCY：78%±2% TYPICAL · AT FULL LOAD -48VDC

OUTPUT PROTECTION：OPP / OVP / SCP

WARNING METHOD：AUDIO ALARM (BUZZER SOUND, RESETABLE), FALUT LED, TTL

DIMENSION：190mm (D) × 106mm (W) × 39.5mm (H)

THE POWER-SUPPLY IS FOR CHASSIS-ASSEMBLY ONLY AND IS NOT ALLOWED TO BE OPERATED AS STAND-ALONE COMPONENT. FINAL ASSEMBLY HAS TO COMPLY WITH CORRESPONDING EMC- AND SAFETY-REGULATIONS.

INPUT CHARACTERISTICS

VOLTAGE：

39-72VDC FULL RANGE

FREQUENCY：

0HZ(DC)

STEADY-STATE CURRENT

2/1A AT ANY LOW/HIGH RANGE INPUT VOLTAGE

INRUSH CURRENT：

3AMPS @ 48VDC HIGH FREQUENCY PEAK AMPLITUDES LASTING LESS THAN 100US (AT 25 DEGREES AMBIENT COLD START)

EMI：

IEC61000-3-2, FCC, CISPR 22(EN 55022)

EMS：

EN 61000-4-2 ESD, EN61000-4-4 EFT, EN61000-4-5 SURGE

SAFETY：

TO MEET UL&CUL, TUV, CCC

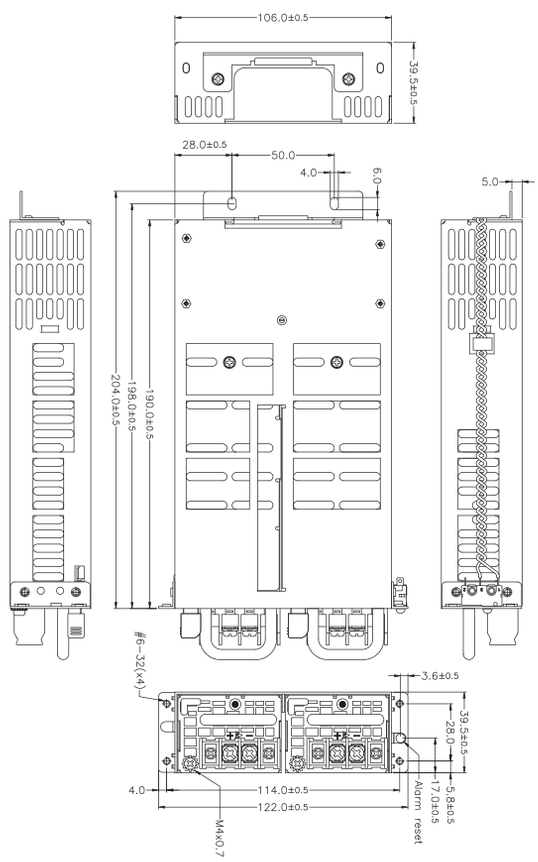

E143756

OUTPUT CHARACTERISTICS

MODEL	WATTAGE	OUTPUT
		+12V
RH1E-1060V	60W	5A
REGULATION LOAD		±5%
RIPPLE AND NOISE		120mV

RH1E-1060V

INPUT CHARACTERISTICS

VOLTAGE :

90 ~ 264VAC FULL RANGE

FREQUENCY :

47 ~ 63HZ

INPUT CURRENT :

1.5/1A @ ANY LOW/HIGH RANGE INPUT VOLTAGE

INRUSH CURRENT :

35/70AMPS @ 115/230 VAC

EMI :

IEC61000-3-2, FCC, CISPR 22(EN 55022)

EMS :

EN 61000-4-2 ESD, EN61000-4-4 EFT, EN61000-4-5 SURGE

SAFETY :

MEET UL&CUL, TUV, CCC

E143756

SPECIFICATION :

TEMPERATURE RANGE : OPERATING 0℃ ~ 50℃ , STORAGE –10℃ ~85℃

HOLD UP TIME : WHEN AC SOURCE SHUTDOWN DC OUTPUT MUST BE MAINTAIN 20mSEC IN REGULATION LIMIT AT NORMAL INPUT VOLTAGE(AC115V AT 80% OF FULL LOAD)

EFFICIENCY : TYPICAL 80% AT 115VIN AND LOAD CONDITION

OUTPUT PROTECTION : OPP / OVP / SCP

LEAKAGE CURRENT : 3.5mA MAX. AT NOMINAL VOLTAGE 264VAC

l WARNING METHOD : AUDIO ALARM (BUZZER SOUND, RESETABLE), FALUT LED, TTL

DIMENSION : 147 (D) × 96 (W) × 36 (H) mm;

THE POWER-SUPPLY IS FOR CHASSIS-ASSEMBLY ONLY AND IS NOT ALLOWED TO BE OPERATED AS STAND-ALONE COMPONENT. FINAL ASSEMBLY HAS TO COMPLY WITH CORRESPONDING EMC- AND SAFETY-REGULATIONS.

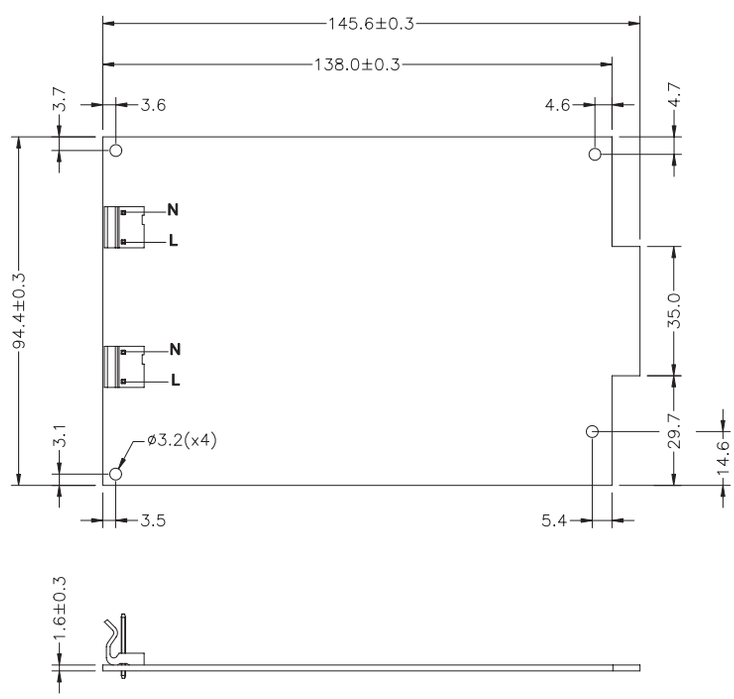

AN1U-5150V

OUTPUT CHARACTERISTICS

MODEL	WATTAGE	OUTPUT					
		+5V	+12V	+3.3V	-5V	-12V	+5VSB
AN1U-5150V	150W	8A	12.5A	8A	X	0.3A	2A
REGULATION LOAD		±5%	±5%	±5%	X	±10%	±5%
RIPPLE AND NOISE		50mV	120mV	50mV	X	120mV	50mV

REMARKS：
PEAK：+5V → 12A, +3.3V → 12A, +5VSB → 3A; LOAD SHOULD NOT EXCEED 20SECONDS.
+5V AND +3.3V TOTAL OUTPUT：65W MAX
TOTAL OUTPUT POWER：150W

SPECIFICATION：

TEMPERATURE RANGE：OPERATING -20℃ ~40℃ , STORAGE –20℃ ~80℃

EFFICIENCY：96% (+/-2%) AT 12VDC AND LOAD CONDITION：5V/5.39A, 12V/8.01A, +3.3V/5.39A, -12V/0.2A, 5VSB/1.34A

OUTPUT PROTECTION：OPP / OVP / SCP

DIMENSION： 39mm (D) × 99mm (W) × 20.6mm (H)

THE POWER-SUPPLY IS FOR CHASSIS-ASSEMBLY ONLY AND IS NOT ALLOWED TO BE OPERATED AS STAND-ALONE COMPONENT. FINAL ASSEMBLY HAS TO COMPLY WITH CORRESPONDING EMC- AND SAFETY-REGULATIONS.

INPUT CHARACTERISTICS

VOLTAGE：

12VDC FULL RANGE (11.4~12.6V)

STEADY-STATE CURRENT：

15A

EMI：

IEC61000-3-2, FCC, CISPR 22(EN 55022)

EMS：

EN 61000-4-2 ESD, EN61000-4-4 EFT, EN61000-4-5 SURGE

SAFETY：

TO MEET UL, CUL, TUV, CCC

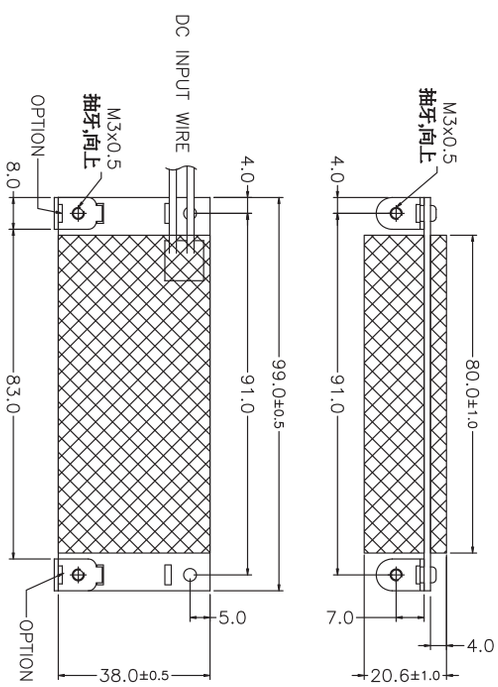

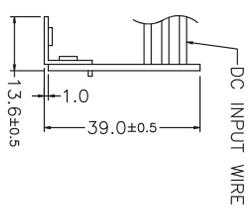

AN1P-5400V

OUTPUT CHARACTERISTICS

MODEL	WATTAGE	OUTPUT					
		+5V	+12V	+3.3V	-5V	-12V	+5VSB
AN1P-5400V	400W	35A	33A	31A	X	0.5A	3A
REGULATION LOAD		±5%	±5%	±5%	X	±10%	±5%
RIPPLE AND NOISE		50mV	120mV	50mV	X	120mV	50mV

REMARKS：
WITHOUT AIR-FLO：+5V/21.54A AND +3.3V/18A TOTAL OUTPUT MAX ：170W.
+5V ,+3.3V ,+12V,-12V TOTAL OUTPUT MAX ：400W
EXTERNAL FORCED AIR COOLING FAN CFM ：9.53,
+3.3V AND +5V MAXIMUM POWER ：210W,
MAXIMUML OUTPUT POWER :400W

SPECIFICATION：

TEMPERATURE RANGE：OPERATING 0℃ ~50℃ , STORAGE –20℃ ~80℃

HOLD UP TIME：16mS MINIMUM AT 115V 80% OF FULL LOAD

EFFICIENCY：96% (+/-2%) AT 12VDC AND LOAD CONDITION：5V/21.54A ,12V/14.5A, +3.3V/31 A, -12V/0.5A, 5VSB/3A

OUTPUT PROTECTION：OPP / OVP / SCP

DIMENSION： 70mm (D) × 81.5mm (W) × 40mm (H)

THE POWER-SUPPLY IS FOR CHASSIS-ASSEMBLY ONLY AND IS NOT ALLOWED TO BE OPERATED AS STAND-ALONE COMPONENT. FINAL ASSEMBLY HAS TO COMPLY WITH CORRESPONDING EMC- AND SAFETY-REGULATIONS.

INPUT CHARACTERISTICS

VOLTAGE：

DC 12V (11.4V~12.6V)

STEADY-STATE CURRENT：

12V/40A AND 5VSB/3A

EMI：

IEC61000-3-2, FCC, CISPR 22(EN 55022)

EMS：

EN 61000-4-2 ESD, EN61000-4-4 EFT, EN61000-4-5 SURGE

SAFETY：

TO MEET UL, CUL, TUV, CCC

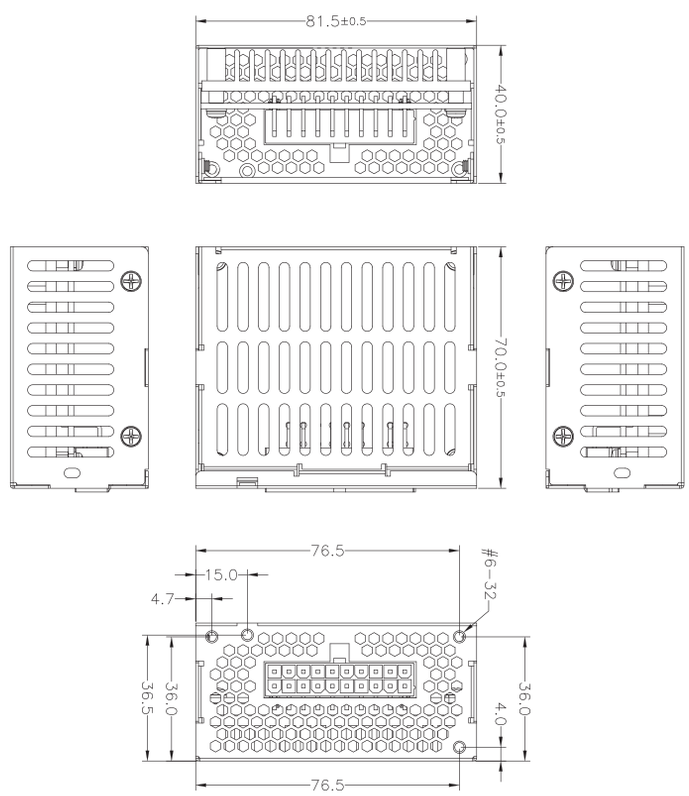

FANLESS DC 1U

AB1U-5120V

OUTPUT CHARACTERISTICS

MODEL	WATTAGE	OUTPUT					
		+5V	+12V	+3.3V	-5V	-12V	+5VSB
AB1U-5120V	120W	14A	8A	12A	X	0.5A	1.5A
REGULATION LOAD		±5%	±5%	±5%	X	±10%	±5%
RIPPLE AND NOISE		50mV	120mV	50mV	X	120mV	50mV

REMARKS：
+5V AND +3.3V TOTAL OUTPUT MAX：70W(WITH 10CFM); +5V AND +3.3V TOTAL OUTPUT MAX：50W(WITHOUT FAN)

SPECIFICATION：

TEMPERATURE RANGE：OPERATING 0℃ ~70℃ , STORAGE –20℃ ~80℃

HOLD UP TIME：2mS MINIMUM AT 10V FULL LOAD

EFFICIENCY：80%(±2%) TYPICAL @ FULL LOAD 12VDC/24VDC IN AND LOAD CONDIT TION:12V/4.46A;5V/4.98A;3.3V/4.27A;-12V/0.39A;5VSB/0.56A

OUTPUT PROTECTION：OPP / OVP / SCP

REMOTE ON/OFF CONTROL

DIMENSION：152.4mm (D) x 83.8mm (W) x 38mm (H)

THE POWER-SUPPLY IS FOR CHASSIS-ASSEMBLY ONLY AND IS NOT ALLOWED TO BE OPERATED AS STAND-ALONE COMPONENT. FINAL ASSEMBLY HAS TO COMPLY WITH CORRESPONDING EMC- AND SAFETY-REGULATIONS.

INPUT CHARACTERISTICS

VOLTAGE：

10 ~ 36VDC

INPUT CURRENT：

14.5/4A AT ANY LOW/HIGH RANGE INPUT VOLTAGE

INRUSH CURRENT：

15AMPS MAX. @ 36 VDC (AT 25 DEGREES AMBIENT COLD START)

EMI：

IEC61000-3-2, FCC, CISPR 22(EN 55022)

EMS：

EN 61000-4-2 ESD, EN61000-4-4 EFT, EN61000-4-5 SURGE

SAFETY：

TO MEET UL&CUL, TUV, CCC

E143756

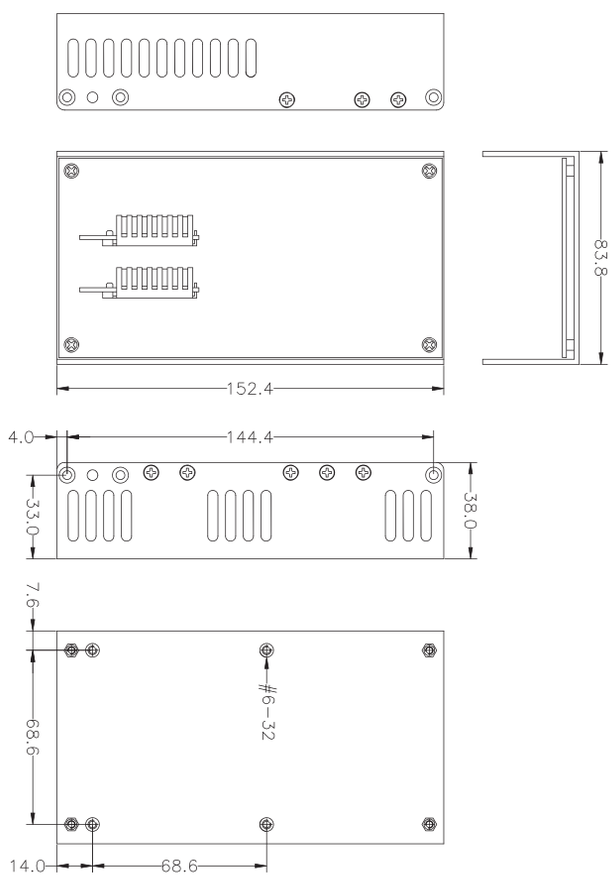

BB1U-6150V

OUTPUT CHARACTERISTICS

MODEL	WATTAGE	OUTPUT					
		+5V	+12V	+3.3V	-5V	-12V	+5VSB
BB1U-6150V	150W	14A	12A	12A	0.3A	0.5A	1.5A
REGULATION LOAD		±5%	±5%	±5%	±5%	±10%	±5%
RIPPLE AND NOISE		50mV	120mV	50mV	100mV	120mV	50mV

REMARKS：
-5V IS OPTION AND WE DID NOT PUT -5V IN OUT STANDARD MODEL; +5V AND +3.3V TOTAL OUTPUT MAX：50W(WITHOUT FAN)
+5V AN +3.3V TOTAL OUTPUT MAX：70W(WITH 10CFM)

SPECIFICATION：

TEMPERATURE RANGE：OPERATING 0℃ ~70℃ , STORAGE –20℃ ~80℃

HOLD UP TIME：2mS MINIMUM AT 18V FULL LOAD

EFFICIENCY：82%(+/-2%) AT 18VDC/24VDC IN AND LOAD CONDITION; 12V/6.12A; 5V/4.98A; 3.3V/4.27A; -12V/0.39A; 5VSB/0.56A

OUTPUT PROTECTION：OPP / OVP / SCP

DIMENSION：152.4mm (D) × 83.8mm (W) × 38mm (H)

THE POWER-SUPPLY IS FOR CHASSIS-ASSEMBLY ONLY AND IS NOT ALLOWED TO BE OPERATED AS STAND-ALONE COMPONENT. FINAL ASSEMBLY HAS TO COMPLY WITH CORRESPONDING EMC- AND SAFETY-REGULATIONS.

INPUT CHARACTERISTICS

VOLTAGE：

18 ~ 36VDC

INPUT CURRENT：

10/5A AT ANY LOW/HIGH RANGE INPUT VOLTAGE

INRUSH CURRENT：

15AMPS @ 36 VDC (AT 25 DEGREES AMBIENT COLD START)

EMI：

IEC61000-3-2, FCC, CISPR 22(EN 55022)

EMS：

EN 61000-4-2 ESD, EN61000-4-4 EFT, EN61000-4-5 SURGE

SAFETY：

TO MEET UL&CUL, TUV, CCC

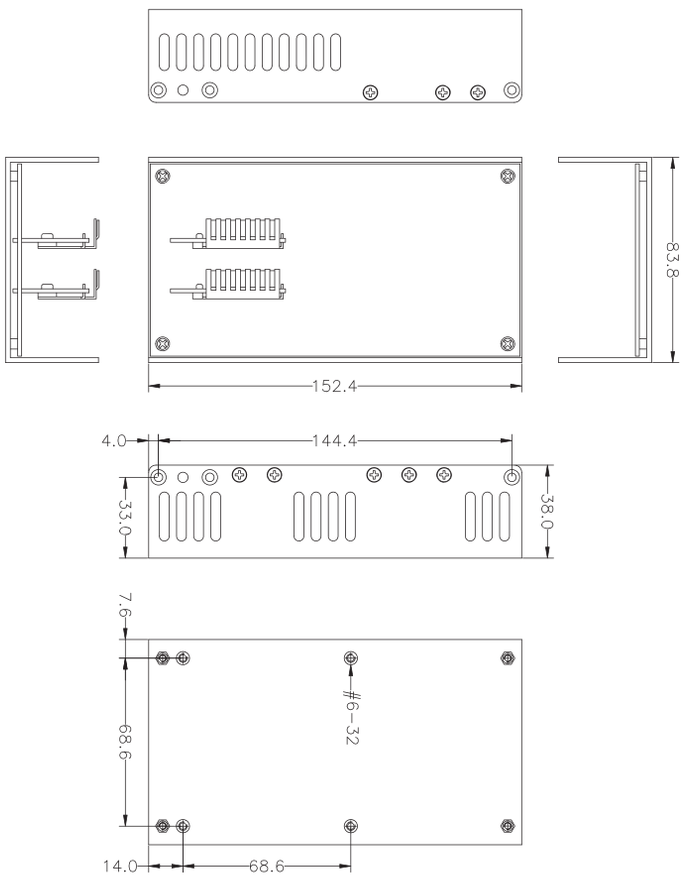

E143756

P1S-5300G

OUTPUT CHARACTERISTICS

MODEL	WATTAGE	OUTPUT						
		+5V	+12V1	+12V2	+3.3V	-5V	-12V	+5VSB
P1S-5300G	300W	14A	25A	X	14A	X	0.5A	3A
REGULATION LOAD		±5%	±5%	X	±5%	X	±10%	±5%
RIPPLE AND NOISE		60mV	120mV	X	60mV	X	120mV	60mV

SPECIFICATION：

TEMPERATURE RANGE：OPERATING 0℃～ 50℃ , STORAGE -20℃ ~80℃

EFFICIENCY：80%-84% TYPICAL @ 115V FULL LOAD

POWER GOOD SIGNAL：ON DELAY 100mS TO 500mS · OFF DELAY 1mS

HOLD UP TIME：12mS MINIMUM AT 115V FULL LOAD

OUTPUT PROTECCTION：OPP / OVP / SCP

REMOTE ON/OFF CONTROL

DIMENSION：150mm (D) × 81.5mm (W) × 40.3mm (H)

THE POWER-SUPPLY IS FOR CHASSIS-ASSEMBLY ONLY AND IS NOT ALLOWED TO BE OPERATED AS STAND-ALONE COMPONENT. FINAL ASSEMBLY HAS TO COMPLY WITH CORRESPONDING EMC- AND SAFETY-REGULATIONS.

INPUT CHARACTERISTICS

VOLTAGE：

90 ～ 264VAC FULL RANGE

FREQUENCY：

47 ～ 63HZ

INPUT CURRENT：

5 / 2.5 AMPS MAXUMUM AT ANY LOW/HIGH RANGE INPUT VOLTAGE

INRUSH CURRENT：

15/50 AMPS @110/220VAC

POWER FACTOR CORRECTION：

PFC CAN REACH THE TARGET OF 95% @ 115/230V, FULL LOAD, FOLLOWING THE STANDARD OF IEC 61000-3-2

EMI：

IEC61000-3-2, FCC, CISPR 22(EN 55022)

EMS：

EN 61000-4-2 ESD, EN61000-4-4 EFT, EN61000-4-5 SURGE

SAFETY：

UL&CUL, TUV, CCC

E143756

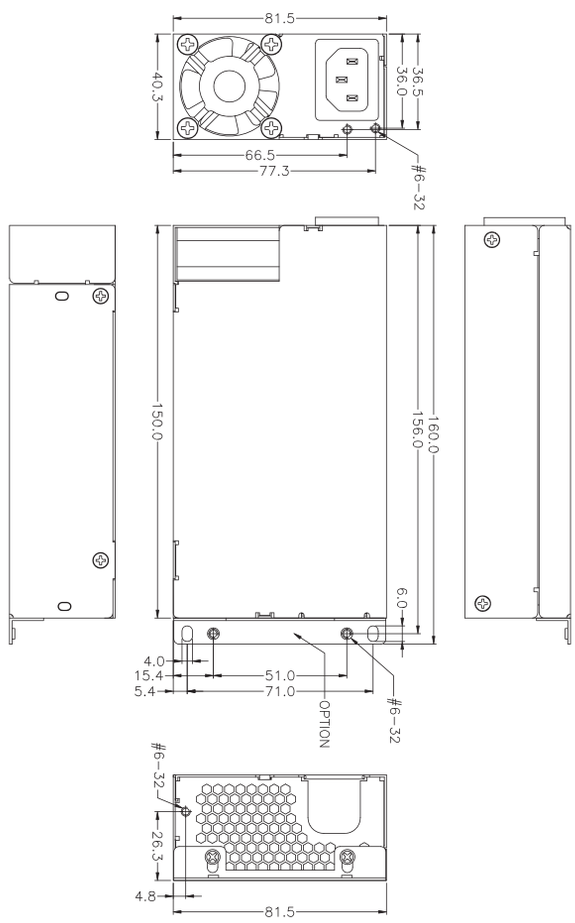

P1S-2300V19

OUTPUT CHARACTERISTICS

MODEL	WATTAGE	OUTPUT					
		+5V	+19V	+3.3V	-5V	-12V	+5VSB
P1S-2300V19	300W	X	15.8A	X	X	X	2.5A
REGULATION LOAD		X	±5%	X	X	X	±5%
RIPPLE AND NOISE		X	190mV	X	X	X	50mV

INPUT CHARACTERISTICS

VOLTAGE：

90 ~ 264VAC FULL RANGE

FREQUENCY：

47 ~ 63HZ

INPUT CURRENT：

4.5 / 2 AMPS MAXIMUM AT ANY LOW/HIGH RANGE INPUT VOLTAGE

INRUSH CURRENT：

60 / 80 AMPS @115/230 VAC (AT 25 DEGREES AMBIENT COLD START FOR EACH POWER UNIT)

POWER FACTOR CORRECTION：

PFC CAN REACH THE TARGET OF 95% @ 115V, FULL LOAD, FOLLOWING THE STANDARD OF IEC 61000-3-2

EMI：

IEC61000-3-2, FCC, CISPR 22(EN 55022)

EMS：

EN 61000-4-2 ESD, EN61000-4-4 EFT, EN61000-4-5 SURGE

SAFETY：

TO MEET UL&CUL, TUV, CCC

E143756

SPECIFICATION：

TEMPERATURE RANGE：OPERATING 0℃ ~ 40℃ , STORAGE -20℃ ~80℃

HOLD UP TIME：WHEN POWER SHUTDOWN DC OUTPUT 19V MUST BE MAINTAIN 16mS IN REGULATION LIMIT AT NORMAL INPUT VOLTAGE

EFFICIENCY：>80% AT 115VAC, 40%~100% MAX LOAD

REMOTE ON/OFF CONTROL

LEAKAGE CURRENT：3.5MA. MAX. AT NOMINAL VOLTAGE 250VAC

POWER GOOD SIGNAL：ON DELAY 100mS TO 550mS · OFF DELAY 1Ms

OUTPUT PROTECTION：OPP / OVP / SCP

DIMENSION：150(D)×81.5(W)×40.3(H) mm

THE POWER-SUPPLY IS FOR CHASSIS-ASSEMBLY ONLY AND IS NOT ALLOWED TO BE OPERATED AS STAND-ALONE COMPONENT. FINAL ASSEMBLY HAS TO COMPLY WITH CORRESPONDING EMC- AND SAFETY-REGULATIONS.

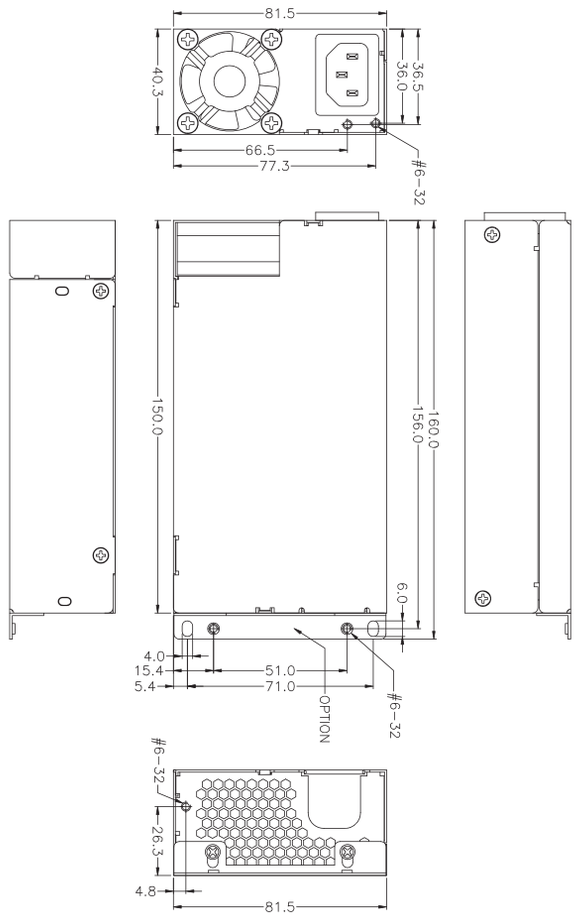

P1S-2300V
P1S-2400V
P1S-2500V

OUTPUT CHARACTERISTICS

MODEL	WATTAGE	OUTPUT					
		+5V	+12V1	+12V2	+3.3V	-5V	+5VSB
P1S-2300V	300W	X	24A	X	X	X	2.5A
P1S-2400V	400W	X	33A	X	X	X	2.5A
P1S-2500V	500W	X	41A	X	X	X	2.5A
REGULATION LOAD		X	±5%	X	X	X	±5%
RIPPLE AND NOISE		X	120mV	X	X	X	50mV

SPECIFICATION：

TEMPERATURE RANGE：OPERATING 0℃ ~40℃ , STORAGE -20℃ ~80℃

HOLD UP TIME：WHEN POWER SHUTDOWN DC OUTPUT 5V MUST BE MAINTAIN 16MS (300W , 400W) / 12MS (500W) IN REGULATION LIMIT AT NORMAL INPUT VOLTAGE

EFFICIENCY：> 80% AT 115VAC, 40%~100% MAX LOAD (300W , 400W)

> 86% AT 115VAC, 40%~100% MAX LOAD (500W)

LEAKAGE CURRENT：3.5mA MAX. AT NOMINAL VOLTAGE 250VAC

POWER GOOD SIGNAL：ON DELAY 100mS TO 500mS · OFF DELAY 1Ms

OUTPUT PROTECTION：OPP / OVP / SCP

DIMENSION：150mm (D) × 81.5mm (W) × 40.3mm (H)

THE POWER-SUPPLY IS FOR CHASSIS-ASSEMBLY ONLY AND IS NOT ALLOWED TO BE OPERATED AS STAND-ALONE COMPONENT. FINAL ASSEMBLY HAS TO COMPLY WITH CORRESPONDING EMC- AND SAFETY-REGULATIONS.

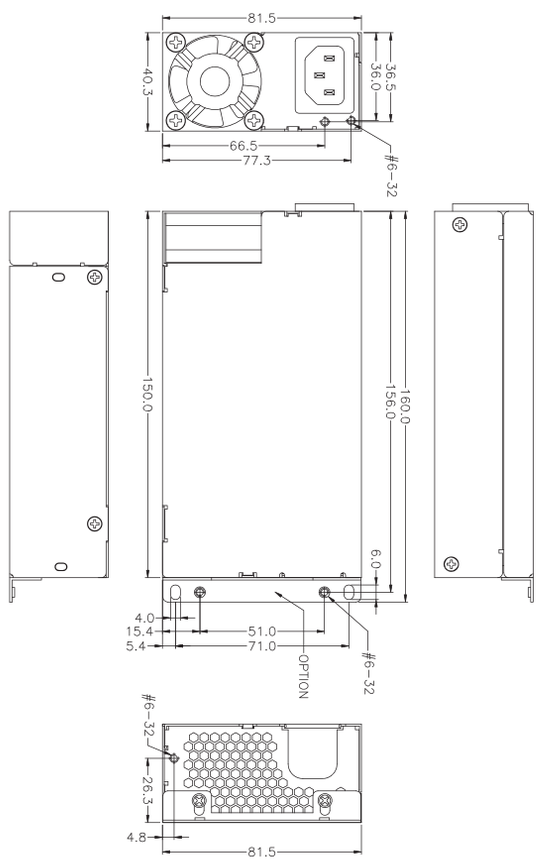

INPUT CHARACTERISTICS

VOLTAGE：

90 ~ 264VAC FULL RANGE (300W , 400W)

180 ~ 264VAC FULL RANGE (500W)

FREQUENCY：

47 ~ 63HZ

INPUT CURRENT：

WATTAGE	115V	230V
300W	4.5A	2A
400W	5.5A	2.5A
500W	6.5A	3A

INRUSH CURRENT：

15/30 AMPS @ 115/230 VAC

POWER FACTOR CORRECTION：

PFC CAN REACH THE TARGET OF 95% AT 115/230VAC, FULL LOAD

EMI：

IEC61000-3-2, FCC, CISPR 22(EN 55022)

EMS：

EN 61000-4-2 ESD, EN61000-4-4 EFT, EN61000-4-5 SURGE

SAFETY：

TO MEET UL&CUL, TUV, CCC

E143756

P1P-5400V
P1P-5401V

OUTPUT CHARACTERISTICS

MODEL	WATTAGE	OUTPUT					
		+5V	+12V	+3.3V	-5V	-12V	+5VSB
P1P-5400V	400W	12A	32A	10A	X	0.5A	2.5A
P1P-5401V	400W	18A	32A	10A	X	0.5A	2.5A
REGULATION LOAD		±5%	±5%	±5%	X	±10%	±5%
RIPPLE AND NOISE		60mV	120mV	60mV	X	120mV	60mV

REMARKS：
+5 AND +3.3V TOTAL OUTPUT MAX：90W

SPECIFICATION：

TEMPERATURE RANGE：OPERATING 0℃ ~40℃ , OPERATING -20℃ ~80℃

EFFICIENCY：TYPICAL 80-84% (5401V：78~83%) AT 25℃ 115V FULL LOAD

POWER GOOD SIGNAL：ON DELAY 100mS TO 500mS · OFF DELAY 1Ms

HOLD UP TIME：12mS MINIMUM AT FULL LOAD & NOMINAL INPUT VOLTAGE

OUTPUT PROTECTION：OPP / OVP / OCP / SCP

REMOTE ON/OFF CONTROL

3.3V & 5V REMOTE SENSING DESIGN

DIMENSION：170mm (D) × 81.5mm (W) × 40.3mm (H)

THE POWER-SUPPLY IS FOR CHASSIS-ASSEMBLY ONLY AND IS NOT ALLOWED TO BE OPERATED AS STAND-ALONE COMPONENT. FINAL ASSEMBLY HAS TO COMPLY WITH CORRESPONDING EMC- AND SAFETY-REGULATIONS.

INPUT CHARACTERISTICS

VOLTAGE：

90~264VAC FULL RANGE

FREQUENCY：

47 ~ 63HZ

INPUT CURRENT：

6/3 AMPS MAXIMUM AT ANY LOW/HIGH RANGE INPUT VOLTAGE

INRUSH CURRENT：

30/60 AMPS @ 115/230VAC

POWER FACTOR CORRECTION：

PFC CAN REACH THE TARGET OF 95% AT 115/230VAC, FULL LOAD

EMI：

IEC61000-3-2, FCC, CISPR 22(EN 55022)

EMS：

EN 61000-4-2 ESD, EN61000-4-4 EFT, EN61000-4-5 SURGE

SAFETY：

TO MEET UL&CUL, TUV, CCC

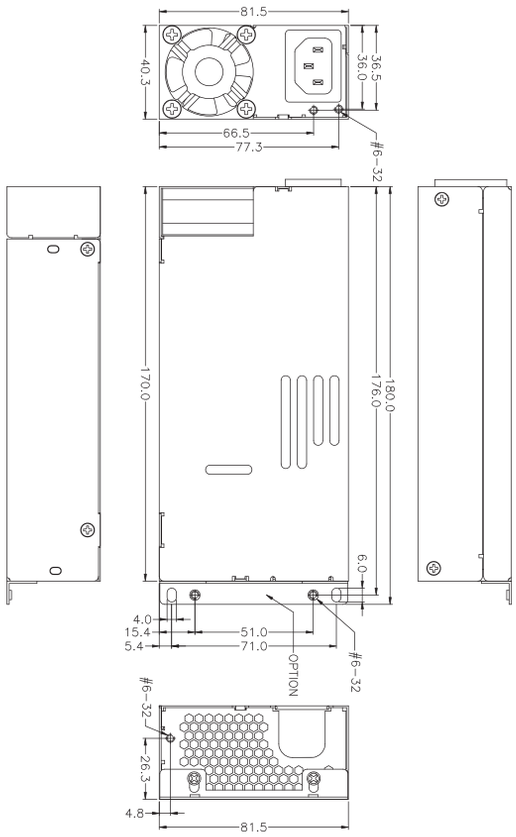

E143756

P1P-2600K

OUTPUT CHARACTERISTICS

MODEL	WATTAGE	OUTPUT					
		+5V	+12V	+3.3V	-5V	-12V	+5VSB
P1P-2600K	600W	X	50A	X	X	X	3A
REGULATION LOAD		X	±5%	X	X	X	±5%
RIPPLE AND NOISE		X	120mA	X	X	X	50mA

REMARKS：
TOTAL POWER：600W

SPECIFICATION：

TEMPERATURE RANGE：OPERATING 0°C ~ 50°C , OPERATING -20°C ~80°C

EFFICIENCY：TYPICAL 93% AT 230V FULL LOAD

POWER GOOD SIGNAL：ON DELAY 100mS TO 500mS · OFF DELAY 1Ms

HOLD UP TIME：12mS MINIMUM AT FULL LOAD & NOMINAL INPUT VOLTAGE

OUTPUT PROTECTION：OPP / OVP / OCP / SCP

REMOTE ON/OFF CONTROL

LEAKAGE CURRENT：3.5mA MAX. AT NOMINAL VOLTAGE VAC

DIMENSION：170mm (D) × 81.5mm (W) × 40.3mm (H)

THE POWER-SUPPLY IS FOR CHASSIS-ASSEMBLY ONLY AND IS NOT ALLOWED TO BE OPERATED AS STAND-ALONE COMPONENT. FINAL ASSEMBLY HAS TO COMPLY WITH CORRESPONDING EMC- AND SAFETY-REGULATIONS.

INPUT CHARACTERISTICS

VOLTAGE：

90~264VAC FULL RANGE

FREQUENCY：

47 ~ 63HZ

INPUT CURRENT：

8.5/4.5 AMPS MAXIMUM AT ANY LOW/HIGH RANGE INPUT VOLTAGE

INRUSH CURRENT：

35/80 AMPS @ 115/230VAC

POWER FACTOR CORRECTION：

PFC CAN REACH THE TARGET OF 95% @ 115V, FULL LOAD, FOLLOWING THE STANDARD OF IEC 61000-3-2

EMI：

IEC61000-3-2, FCC, CISPR 22(EN 55022)

EMS：

EN 61000-4-2 ESD, EN61000-4-4 EFT, EN61000-4-5 SURGE

SAFETY：

TO MEET UL&CUL, TUV, CCC

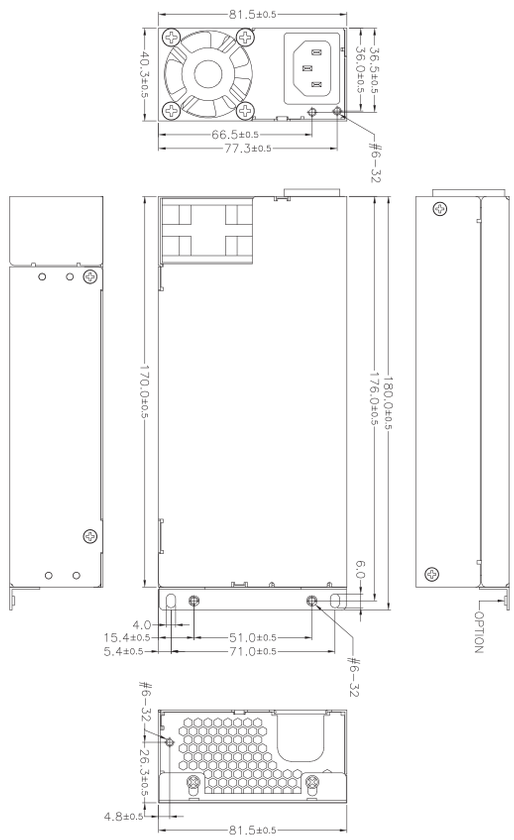

E143756

P1P-2600G
P1P-2600K

OUTPUT CHARACTERISTICS

MODEL	WATTAGE	OUTPUT					
		+5V	+12V	+3.3V	-5V	-12V	+5VSB
P1P-2600G	600W	X	50A	X	X	X	3A
REGULATION LOAD		X	±5%	X	X	X	±5%
RIPPLE AND NOISE		X	120mA	X	X	X	50mA

REMARKS：
TOTAL POWER：600W

SPECIFICATION：

TEMPERATURE RANGE：OPERATING 0°C ~ 50°C , OPERATING -20°C ~80°C

EFFICIENCY：TYPICAL 87% AT 230V FULL LOAD

POWER GOOD SIGNAL：ON DELAY 100mS TO 500mS · OFF DELAY 1Ms

HOLD UP TIME：12mS MINIMUM AT FULL LOAD & NOMINAL INPUT VOLTAGE

OUTPUT PROTECTION：OPP / OVP / OCP / SCP

REMOTE ON/OFF CONTROL

LEAKAGE CURRENT：3.5mA MAX. AT NOMINAL VOLTAGE VAC

DIMENSION：170mm (D) × 81.5mm (W) × 40.3mm (H)

THE POWER-SUPPLY IS FOR CHASSIS-ASSEMBLY ONLY AND IS NOT ALLOWED TO BE OPERATED AS STAND-ALONE COMPONENT. FINAL ASSEMBLY HAS TO COMPLY WITH CORRESPONDING EMC- AND SAFETY-REGULATIONS.

INPUT CHARACTERISTICS

VOLTAGE：

90~264VAC FULL RANGE

FREQUENCY：

47 ~ 63HZ

INPUT CURRENT：

8.5/4.5 AMPS MAXIMUM AT ANY LOW/HIGH RANGE INPUT VOLTAGE

INRUSH CURRENT：

35/80 AMPS @ 115/230VAC

POWER FACTOR CORRECTION：

PFC CAN REACH THE TARGET OF 95% @ 115V, FULL LOAD, FOLLOWING THE STANDARD OF IEC 61000-3-2

EMI：

IEC61000-3-2, FCC, CISPR 22(EN 55022)

EMS：

EN 61000-4-2 ESD, EN61000-4-4 EFT, EN61000-4-5 SURGE

SAFETY：

TO MEET UL&CUL, TUV, CCC

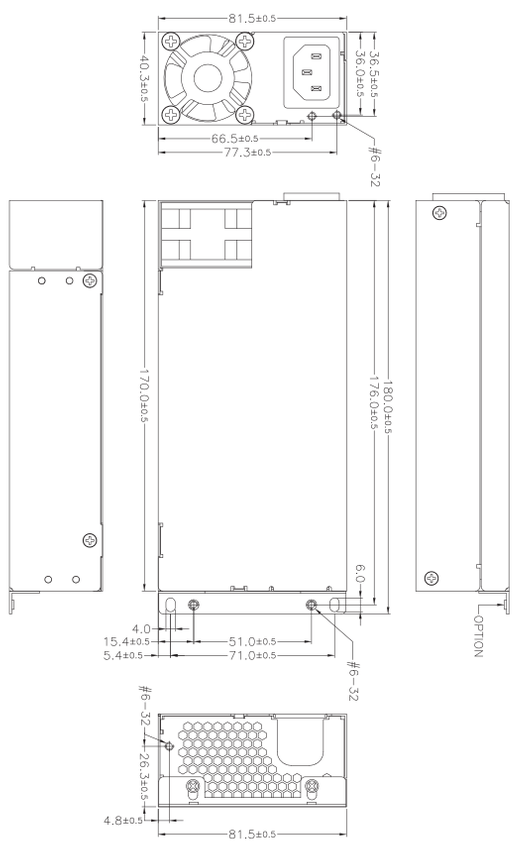

E143756

H1U-5300V
H1U-5320V

OUTPUT CHARACTERISTICS

MODEL	WATTAGE	OUTPUT					
		+5V	+12V	+3.3V	-5V*	-12V	+5VSB
H1U-5300V	300W	18A	22A	16A	X	0.5A	2A
H1U-5320V	320W	18A	22A	16A	X	0.5A	2A
REGULATION LOAD		±5%	±5%	±5%	X	±10%	±5%
RIPPLE AND NOISE		50mV	120mV	50mV	X	120mV	50mV

REMARKS：
+5V AND +3.3V TOTAL OUTPUT MAX：25A

SPECIFICATION：

TEMPERATURE RANGE：OPERATING 0°C ~40°C , STORAGE –20°C ~80°C

EFFICIENCY：TYPICAL 80-84% @ 115V FULL LOAD

POWER GOOD SIGNAL：ON DELAY 100 ms TO 500 ms, OFF DELAY 1 ms

HOLD UP TIME：16 ms MINIMUM AT 115AC INPUT; 20ms MINIMUM AT 230 AC INPUT

OUTPUT PROTECTION：OPP / OVP / SCP

3.3V REMOTE SENSING DESIGN

DIMENSION：155mm (D) x 100mm (W) x 40mm (H)

THE POWER-SUPPLY IS FOR CHASSIS-ASSEMBLY ONLY AND IS NOT ALLOWED TO BE OPERATED AS STAND-ALONE COMPONENT. FINAL ASSEMBLY HAS TO COMPLY WITH CORRESPONDING EMC- AND SAFETY-REGULATIONS.

INPUT CHARACTERISTICS

VOLTAGE：

90~264VAC FULL RANGE

FREQUENCY：

47 ~ 63HZ

INPUT CURRENT：

4/2 AMPS MAXIMUM AT ANY LOW/HIGH RANGE INPUT VOLTAGE

INRUSH CURRENT：

20/40 AMPS @ 115/230VAC

POWER FACTOR CORRECTION：

PFC CAN REACH THE TARGET OF 95% AT 115/230VAC, FULL LOAD

EMI：

IEC61000-3-2, FCC, CISPR 22(EN 55022)

EMS：

EN 61000-4-2 ESD, EN61000-4-4 EFT, EN61000-4-5 SURGE

SAFETY：

TO MEET UL&CUL, TUV, CCC

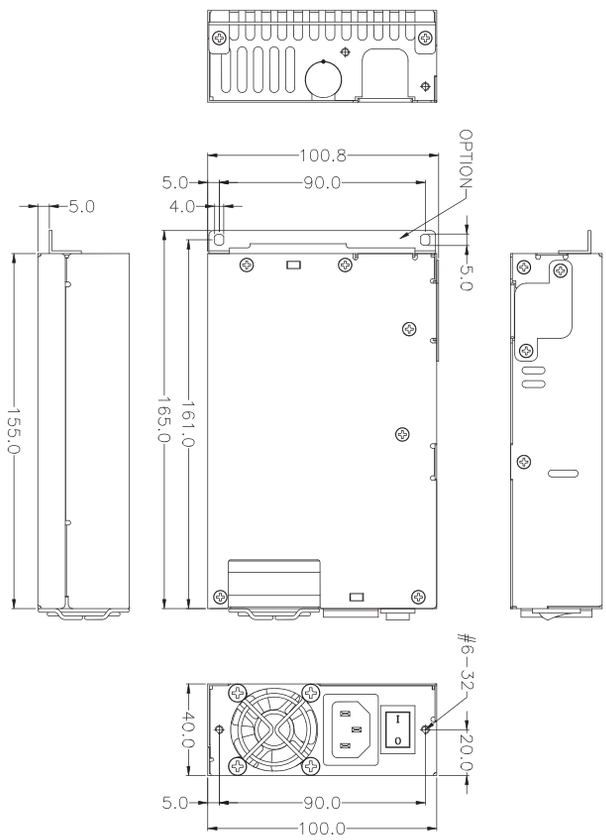

OUTPUT CHARACTERISTICS

MODEL	WATTAGE	OUTPUT					
		+5V	+12V	+3.3V	-5V	-12V	+5VSB
P1U-5400E	400W	0~18	2~32	0~18	X	0~0.5	0.1~3
REGULATION LOAD		±5%	±5%	±5%	X	±5%	±5%
RIPPLE AND NOISE		50mV	120mV	50mV	X	120mV	50mV

REMARKS：
+5V AND +3.3V TOTAL OUTPUT MAX：105W

P1U-5400E

Erp ready

INPUT CHARACTERISTICS

VOLTAGE：

90~264VAC FULL RANGE

FREQUENCY：

47 ~ 63HZ

INPUT CURRENT：

8/4 AMPS MAXIMUM AT ANY LOW/HIGH RANGE INPUT VOLTAGE

INRUSH CURRENT：

15/30 AMPS @ 115/230VAC

POWER FACTOR CORRECTION：

PFC CAN REACH THE TARGET OF 95% @ 115V, FULL LOAD, FOLLOWING THE STANDARD OF IEC 61000-3-2

EMI：

IEC61000-3-2, FCC, CISPR 22(EN 55022)

EMS：

EN 61000-4-2 ESD, EN61000-4-4 EFT, EN61000-4-5 SURGE

SAFETY：

TO MEET UL, CUL, TUV

SPECIFICATION：

TEMPERATURE RANGE：OPERATING 0°C ~ 50°C , STORAGE –20°C ~ 80°C

EFFICIENCY：85%±2 TYPICAL AT 115V, FULL LOAD

POWER GOOD SIGNAL：ON DELAY 100 ms TO 500 ms, OFF DELAY 1 ms

HOLD UP TIME：16 ms MINIMUM AT FULL LOAD & NORMAL INPUT VOLTAGE

OUTPUT PROTECTION：OPP / OVP / SCP

LEAKAGE CURRENT：3.5MA MAX. AT NOMINAL VOLTAGE 264VAC

REMOTE ON/OFF CONTROL

DIMENSION：190mm (D) x 100mm (W) x 40mm (H)

THE POWER-SUPPLY IS FOR CHASSIS-ASSEMBLY ONLY AND IS NOT ALLOWED TO BE OPERATED AS STAND-ALONE COMPONENT. FINAL ASSEMBLY HAS TO COMPLY WITH CORRESPONDING EMC- AND SAFETY-REGULATIONS.

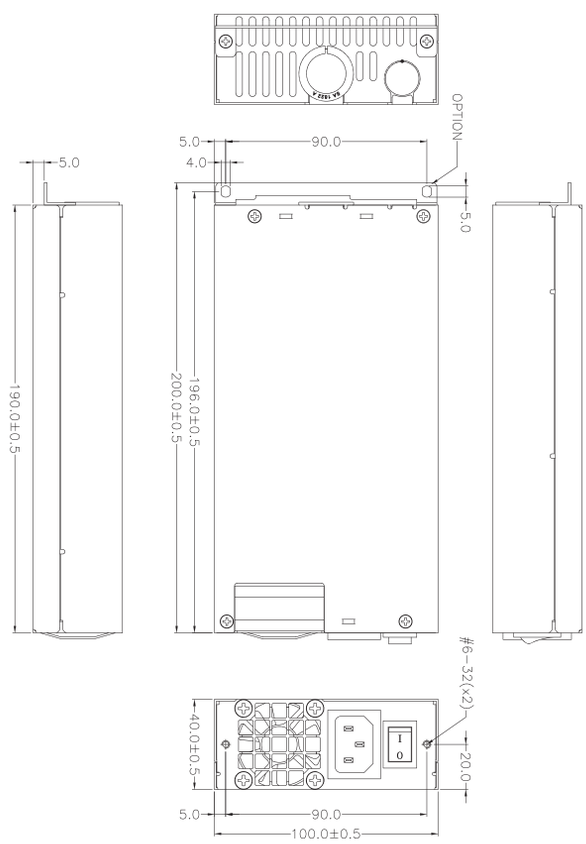

P1U-5520K

OUTPUT CHARACTERISTICS

MODEL	WATTAGE	OUTPUT					
		+5V	+12V	+3.3V	-5V*	-12V	+5VSB
P1U-5520K	520W	14A	43A	14A	X	0.3A	2A
REGULATION LOAD		±5%	±5%	±5%	X	±5%	±5%
RIPPLE AND NOISE		50mV	120mV	50mV	X	50mV	50mV

REMARKS：
+5V AND +3.3V TOTAL OUTPUT MAX：70W

SPECIFICATION：

TEMPERATURE RANGE：OPERATING 0°C ~ 50°C , STORAGE –20°C ~ 80°C

EFFICIENCY：89%±2 TYPICAL AT 115V, FULL LOAD

POWER GOOD SIGNAL：ON DELAY 100 ms TO 500 ms, OFF DELAY 1 ms

HOLD UP TIME：16ms MINIMUM AT 80% of FULL LOAD & NORMAL INPUT VOLTAGE

OUTPUT PROTECTION：OPP / OVP / SCP

LEAKAGE CURRENT：3.5mA MAX. AT NOMINAL VOLTAGE 264VAC

REMOTE ON/OFF CONTROL

DIMENSION：190 (D) x 100 (W) x 40 (H) mm

THE POWER-SUPPLY IS FOR CHASSIS-ASSEMBLY ONLY AND IS NOT ALLOWED TO BE OPERATED AS STAND-ALONE COMPONENT. FINAL ASSEMBLY HAS TO COMPLY WITH CORRESPONDING EMC- AND SAFETY-REGULATIONS.

INPUT CHARACTERISTICS

VOLTAGE：

90~264VAC FULL RANGE

FREQUENCY：

47 ~ 63HZ

INPUT CURRENT：

8/4 AMPS MAXIMUM AT ANY LOW/HIGH RANGE INPUT VOLTAGE

INRUSH CURRENT：

15/30 AMPS @ 115/230VAC

POWER FACTOR CORRECTION：

PFC CAN REACH THE TARGET OF 95% @ 115V, FULL LOAD, FOLLOWING THE STANDARD OF IEC 61000-3-2

EMI：

IEC61000-3-2, FCC, CISPR 22(EN 55022)

EMS：

EN 61000-4-2 ESD, EN61000-4-4 EFT, EN61000-4-5 SURGE

SAFETY：

TO MEET UL, CUL, TUV

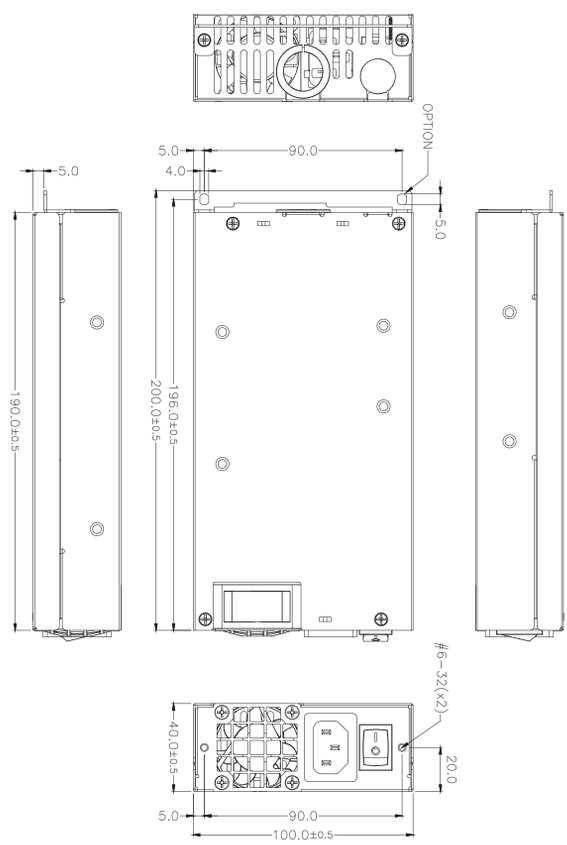

P1H-5400V
P1H-5500V
P1H-5550V
P1H-5501V
P1H-5551V

INPUT CHARACTERISTICS

VOLTAGE：

90~264VAC FULL RANGE

FREQUENCY：

47 ~ 63HZ

INPUT CURRENT：

6~10/3~5 AMPS MAXIMUM AT ANY LOW/HIGH RANGE INPUT VOLTAGE

INRUSH CURRENT：

20/40 AMPS @ 115/230VAC

POWER FACTOR CORRECTION：

PFC CAN REACH THE TARGET OF 95% AT 115/230VAC, FULL LOAD

EMI：

IEC61000-3-2, FCC, CISPR 22(EN 55022)

EMS：

EN 61000-4-2 ESD, EN61000-4-4 EFT, EN61000-4-5 SURGE

SAFETY：

TO MEET UL&CUL, TUV, CCC

E143756

OUTPUT CHARACTERISTICS

MODEL	WATTAGE	OUTPUT					
		+5V	+12V	+3.3V	-5V	-12V	+5VSB
P1H-5400V	400W	22A	32A	22A	X	0.8A	3.5A
P1H-5500V	500W	25A	40A	25A	X	0.8A	3.5A
P1H-5550V	550W	25A	40A	25A	X	0.8A	3.5A
P1H-5501V	500W	25A	40A	25A	X	0.8A	4A
P1H-5551V	550W	25A	40A	25A	X	0.8A	4A
REGULATION LOAD		±5%	±5%	±5%	X	±5%	±5%
RIPPLE AND NOISE		60mV	120mV	60mV	X	120mV	60mV

REMARKS：
+5V AND +3.3V TOTAL OUTPUT MAX：35A

SPECIFICATION：

TEMPERATURE RANGE：OPERATING 0℃ ~50℃ , STORAGE -20℃ ~80℃

HOLD UP TIME：WHEN POWER SHUTDOWN DC OUTPUT 5V MUST BE MAINTAIN 16ms IN REGULATION LIMIT AT NORMAL INPUT VOLTAGE

EFFICIENCY：80% TYPICAL @ 115V FULL LOAD

LEAKAGE CURRENT：3.5mA MAX. AT NOMINAL VOLTAGE 250VAC

POWER GOOD SIGNAL：ON DELAY 100mS TO 500mS · OFF DELAY 1ms

OUTPUT PROTECTION：OPP / OVP / SCP / OCP

DIMENSION：225mm (D) × 100mm (W) × 40.5mm (H)

THE POWER-SUPPLY IS FOR CHASSIS-ASSEMBLY ONLY AND IS NOT ALLOWED TO BE OPERATED AS STAND-ALONE COMPONENT. FINAL ASSEMBLY HAS TO COMPLY WITH CORRESPONDING EMC- AND SAFETY-REGULATIONS.

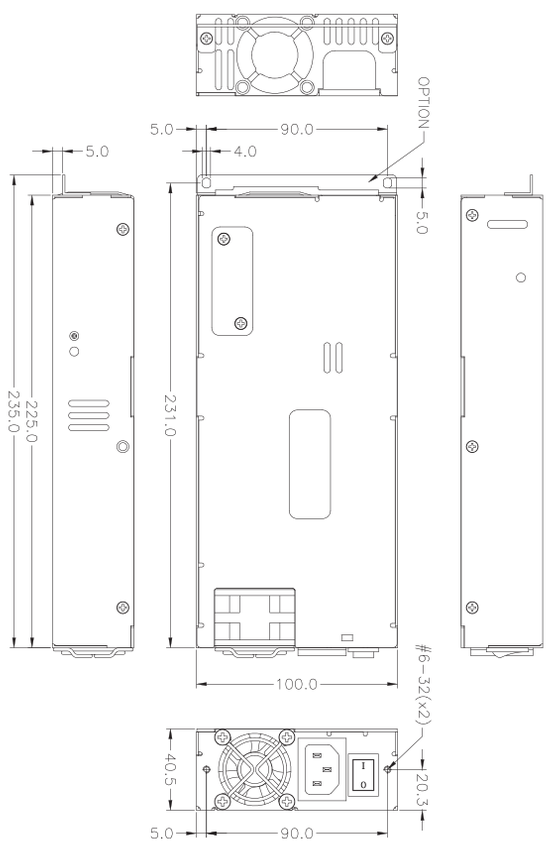

P1H-5407V
P1H-5507V
P1H-5557V

OUTPUT CHARACTERISTICS

MODEL	WATTAGE	OUTPUT					
		+5V	+12V	+3.3V	-5V	-12V	+5VSB
P1H-5407V	400W	22A	32A	22A	X	0.8A	3.5A
P1H-5507V	500W	25A	40A	25A	X	0.8A	3.5A
P1H-5557V	550W	25A	40A	25A	X	0.8A	3.5A
REGULATION LOAD		±5%	±5%	±5%	X	±5%	±5%
RIPPLE AND NOISE		60mV	120mV	60mV	X	120mV	60mV

REMARKS :
+5V AND +3.3V TOTAL OUTPUT MAX : 35A

SPECIFICATION :

TEMPERATURE RANGE : OPERATING 0℃ ~50℃ , STORAGE -20℃ ~80℃

HOLD UP TIME : 16mS MINIMUM AT FULL LOAD & NOMINAL INPUT VOLTAGE

EFFICIENCY : TYPICAL >80% @ 115V FULL LOAD

POWER GOOD SIGNAL : ON DELAY 100mS TO 500mS · OFF DELAY 1ms

OUTPUT PROTECTION : OPP / OVP / OCP / SCP

DIMENSION : 225mm (D) × 100mm (W) × 40.5mm (H)

THE POWER-SUPPLY IS FOR CHASSIS-ASSEMBLY ONLY AND IS NOT ALLOWED TO BE OPERATED AS STAND-ALONE COMPONENT. FINAL ASSEMBLY HAS TO COMPLY WITH CORRESPONDING EMC- AND SAFETY-REGULATIONS.

INPUT CHARACTERISTICS

VOLTAGE :

90~264VAC FULL RANGE

FREQUENCY :

47 ~ 63HZ

INPUT CURRENT :

6~10/3~5 AMPS MAXIMUM AT ANY LOW/HIGH RANGE INPUT VOLTAGE

INRUSH CURRENT :

20/40 AMPS @ 115/230VAC

POWER FACTOR CORRECTION :

PFC CAN REACH THE TARGET OF 95% @ 115/230VAC, FULL LOAD

FOLLOWING THE STANDARD OF IEC 61000-3-2

EMI :

IEC61000-3-2, FCC, CISPR 22(EN 55022)

EMS :

EN 61000-4-2 ESD, EN61000-4-4 EFT, EN61000-4-5 SURGE

SAFETY :

TO MEET UL&CUL, TUV, CCC

E143756

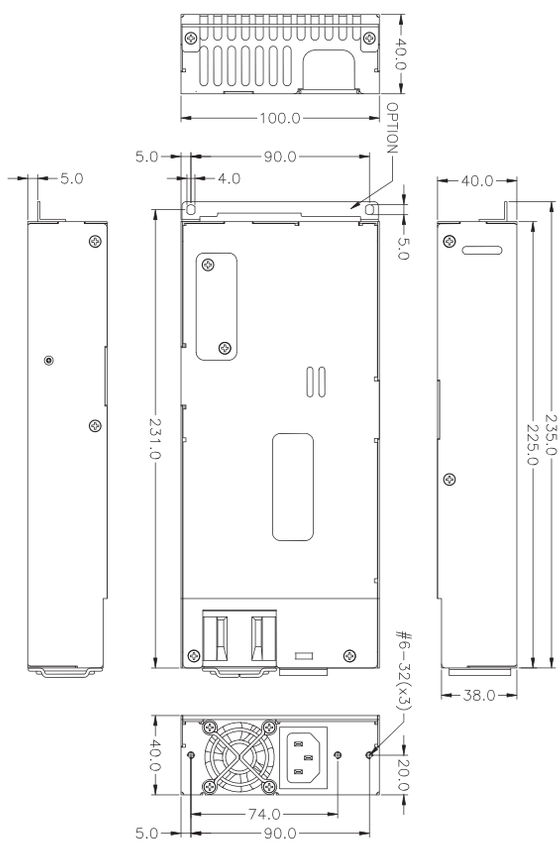

P1H-5420G
P1H-5500G

OUTPUT CHARACTERISTICS

MODEL	WATTAGE	OUTPUT					
		+5V	+12V	+3.3V	-5V	-12V	+5VSB
P1H-5420G	420W	12A	32A	12A	X	0.5A	3A
P1H-5500G	500W	18A	40A	18A	X	0.5A	3A
REGULATION LOAD		±5%	±5%	±5%	X	±5%	±5%
RIPPLE AND NOISE		50mV	120mV	50mV	X	120mV	50mV

REMARKS：
THE OUTPUT CURRENT OF +5V AND +3.3V NOT EXCEED 90W / 100W

SPECIFICATION：

TEMPERATURE RANGE：OPERATING 0℃ ~ 50℃ , STORAGE -20℃ ~80℃

HOLD UP TIME：WHEN POWER SHUTDOWN DC OUTPUT 5V MUST BE MAINTAIN 16MSEC IN REGULATION LIMIT AT NORMAL INPUT VOLTAGE

EFFICIENCY：>87% TYPICAL @ 115V FULL LOAD

LEAKAGE CURRENT：3.5MA. MAX. AT NOMINAL VOLTAGE 250VAC

POWER GOOD SIGNAL：ON DELAY 100mS TO 550mS · OFF DELAY 1Ms

OUTPUT PROTECTION：OPP / OVP / SCP / OCP

DIMENSION：225mm (D) × 100mm (W) × 40.5mm (H)

THE POWER-SUPPLY IS FOR CHASSIS-ASSEMBLY ONLY AND IS NOT ALLOWED TO BE OPERATED AS STAND-ALONE COMPONENT. FINAL ASSEMBLY HAS TO COMPLY WITH CORRESPONDING EMC- AND SAFETY-REGULATIONS.

INPUT CHARACTERISTICS

VOLTAGE：

90~264VAC FULL RANGE

FREQUENCY：

47 ~ 63HZ

INPUT CURRENT：

5.5/2.5A AT ANY LOW/HIGH RANGE INPUT VOLTAGE (420W)

7/3A AT ANY LOW/HIGH RANGE INPUT VOLTAGE (500W)

INRUSH CURRENT：

50/100 AMPS @ 115/230VAC (420W)

40/60 AMPS @ 115/230VAC (500W)

POWER FACTOR CORRECTION：

PFC CAN REACH THE TARGET OF 95% @ 115V, FULL LOAD, FOLLOWING THE STANDARD OF IEC 61000-3-2

EMI：

IEC61000-3-2, FCC, CISPR 22(EN 55022), , CLASS B

EMS：

EN 61000-4-2 ESD, EN61000-4-4 EFT, EN61000-4-5 SURGE

SAFETY：

TO MEET UL&CUL, TUV, CCC

E143756

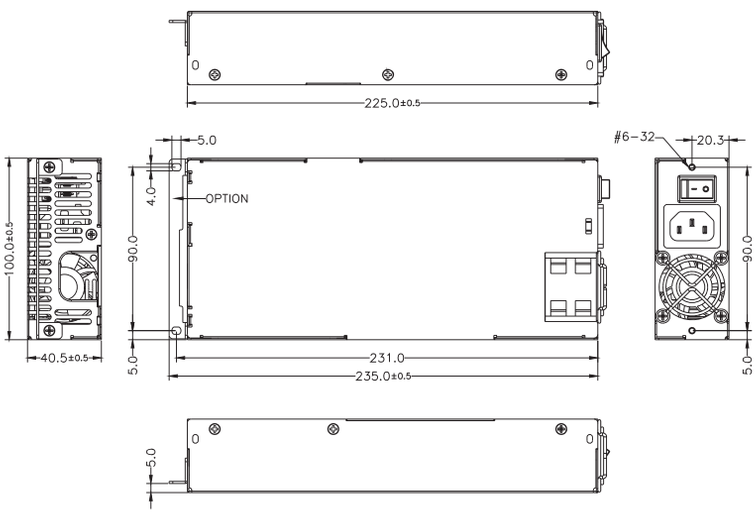

P1H-5420E
P1H-5500E

ErPready

INPUT CHARACTERISTICS

VOLTAGE：

90~264VAC FULL RANGE

FREQUENCY：

47 ~ 63HZ

INPUT CURRENT：

6/3 AT ANY LOW/HIGH RANGE INPUT VOLTAGE(420W)

7/3 AT ANY LOW/HIGH RANGE INPUT VOLTAGE(500W)

INRUSH CURRENT：

50/100 AMPS @ 115/230VAC

POWER FACTOR CORRECTION：

PFC CAN REACH THE TARGET OF 95% @ 115V, FULL LOAD, FOLLOWING THE STANDARD OF IEC 61000-3-2

EMI：

IEC61000-3-2, FCC, CISPR 22(EN 55022), , CLASS B

EMS：

EN 61000-4-2 ESD, EN61000-4-4 EFT, EN61000-4-5 SURGE

SAFETY：

TO MEET UL&CUL, TUV, CCC

E143756

OUTPUT CHARACTERISTICS

MODEL	WATTAGE	OUTPUT					
		+5V	+12V	+3.3V	-5V	-12V	+5VSB
P1H-5420E	420W	12A	32A	12A	X	0.5A	3A
P1H-5500E	500W	18A	40A	18A	X	0.5A	3A
REGULATION LOAD		±5%	±5%	±5%	X	±5%	±5%
RIPPLE AND NOISE		50mV	120mV	50mV	X	120mV	50mV

REMARKS：
THE OUTPUT CURRENT OF +5V AND +3.3V NOT EXCEED 90W/100W；
TOTAL POWER MAX 420W/500W

SPECIFICATION：

TEMPERATURE RANGE：OPERATING 0℃ ~ 50℃ , STORAGE -20℃ ~80℃

HOLD UP TIME：WHEN POWER SHUTDOWN DC OUTPUT 5V MUST BE MAINTAIN 16MSEC IN REGULATION LIMIT AT NORMAL INPUT VOLTAGE

EFFICIENCY：>87% TYPICAL @ 115V FULL LOAD

5VSB EFFICIENCY：5VSB EFFICIENCY IS MEASURED WITH THE MAIN OUTPUTS OFF (REMOTE OFF) @ 115/230VAC

LOAD	EFFICIENCY
90mA	≧ 50%
250mA	≧ 60%
≧ 1A	≧ 70%

LEAKAGE CURRENT：3.5MA. MAX. AT NOMINAL VOLTAGE 240VAC

POWER GOOD SIGNAL：ON DELAY 100mS TO 500mS · OFF DELAY 1Ms

REMOTE ON/OFF CONTROL

OUTPUT PROTECTION：OPP / OVP / SCP / OCP

DIMENSION：225mm (D) × 100mm (W) × 40.5mm (H)

THE POWER-SUPPLY IS FOR CHASSIS-ASSEMBLY ONLY AND IS NOT ALLOWED TO BE OPERATED AS STAND-ALONE COMPONENT. FINAL ASSEMBLY HAS TO COMPLY WITH CORRESPONDING EMC- AND SAFETY-REGULATIONS.

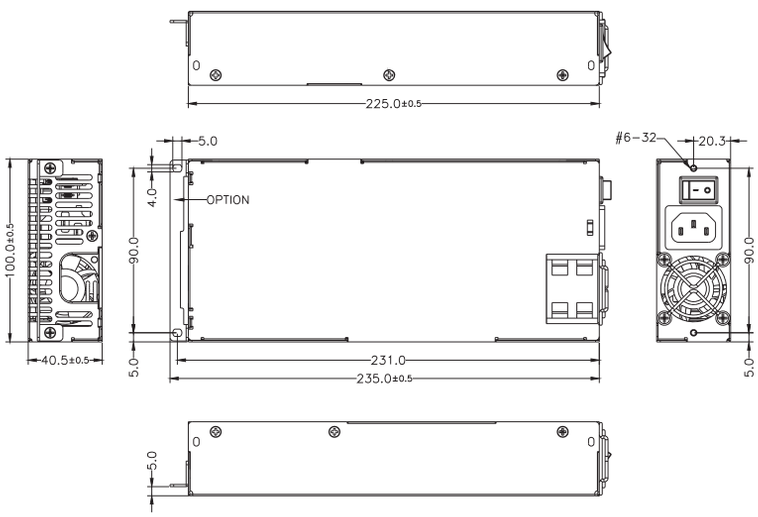

V1E-5250V
V1E-5300V
V1E-5350V

OUTPUT CHARACTERISTICS

MODEL	WATTAGE	OUTPUT					
		+5V	+12V	+3.3V	-5V*	-12V	+5VSB
V1E-5250V	250W	15A	18A	10A	X	1A	2A
V1E-5300V	300W	20A	20A	20A	X	1A	2A
V1E-5350V	350W	20A	25A	20A	X	1A	2A
REGULATION LOAD		±5%	±5%	±5%	X	250W/300W:±10% 350W +13%-7%	±5%
RIPPLE AND NOISE		50mV	120mV	50mV	X	120mV	50mV

REMARKS :
+5V AND +3.3V TOTAL OUTPUT MAX : 80W / 130W / 130W

SPECIFICATION :

TEMPERATURE RANGE : OPERATING 0°C ~50°C ; STORAGE -20°C ~80°C

HOLD UP TIME : 16 ms MINIMUM AT 115AC INPUT; 24ms MINIMUM AT 230 AC INPUT

EFFICIENCY : 81-84% AT 100V FULL LOAD

POWER GOOD SIGNAL : ON DELAY 100 ms TO 550 ms, OFF DELAY 1 ms

OUTPUT PROTECTION : OPP / OVP / SCP

DIMENSION : 210mm (D) x 100mm (W) x 40.5mm (H)

THE POWER-SUPPLY IS FOR CHASSIS-ASSEMBLY ONLY AND IS NOT ALLOWED TO BE OPERATED AS STAND-ALONE COMPONENT. FINAL ASSEMBLY HAS TO COMPLY WITH CORRESPONDING EMC- AND SAFETY-REGULATIONS.

INPUT CHARACTERISTICS

VOLTAGE :

90~264VAC FULL RANGE

FREQUENCY :

47 ~ 63HZ

INPUT CURRENT :

WATTAGE	115V	230V
250W	4A	2A
300W	6A	3A
350W	6A	3A

INRUSH CURRENT :

15/30 AMPS @115/230 VAC

POWER FACTOR CORRECTION :

PFC CAN REACH THE TARGET OF 95% AT 115/230VAC, FULL LOAD

EMI :

IEC61000-3-2, FCC, CISPR 22(EN 55022)

EMS :

EN 61000-4-2 ESD, EN61000-4-4 EFT, EN61000-4-5 SURGE

SAFETY :

TO MEET UL&CUL, TUV, CCC

E143756

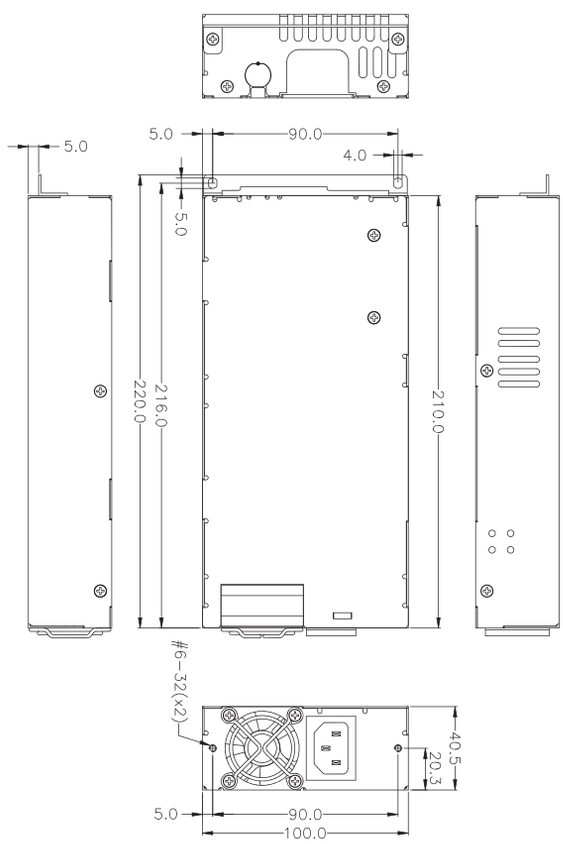

1U

OUTPUT CHARACTERISTICS

MODEL	WATTAGE	OUTPUT						
		+5V	+12V1	+12V2	+3.3V	-5V*	-12V	+5VSB
H1M-5350V	350W	14A	15A	14A	14A	X	0.3A	3A
REGULATION LOAD		±5%	±5%	±5%	±5%	X	±5%	±5%
RIPPLE AND NOISE		50mV	120mV	120mV	50mV	X	120mV	50mV

REMARKS：
TOTAL POWER:350W (MAX)
+5V AND +3.3V TOTAL OUTPUT MAX ：85W

H1M-5350V

SPECIFICATION：

TEMPERATURE RANGE：OPERATING 0°C ~ 40°C , STORAGE –20°C ~ 80°C

EFFICIENCY：TYPICAL >90% @ 230V FULL LOAD

POWER GOOD SIGNAL：ON DELAY 100 ms TO 500 ms, OFF DELAY 1 ms

HOLD UP TIME：16 ms MINIMUM AT 80% LOAD

OUTPUT PROTECTION：OPP / OVP / SCP

REMOTE ON/OFF CONTROL

LEAKAGE CURRENT：INPUT LEAKAGE CURRENT FROM LINE TO GROUND WILL BE LESS THAN 3.5MA RMS. MEASUREMENT WILL BE MADE AT 240 VAC AND 60Hz.

DIMENSION：242mm (D) x 100mm (W) x 40.5mm (H)

THE POWER-SUPPLY IS FOR CHASSIS-ASSEMBLY ONLY AND IS NOT ALLOWED TO BE OPERATED AS STAND-ALONE COMPONENT. FINAL ASSEMBLY HAS TO COMPLY WITH CORRESPONDING EMC- AND SAFETY-REGULATIONS.

INPUT CHARACTERISTICS

VOLTAGE：

90~264VAC FULL RANGE

FREQUENCY：

47 ~ 63HZ

INPUT CURRENT：

6/2.5 AMPS MAXIMUM AT ANY LOW/HIGH RANGE INPUT VOLTAGE

INRUSH CURRENT：

30 AMPS@230VAC

POWER FACTOR CORRECTION：

PFC CAN REACH THE TARGET OF 90% @ 230V, FULL LOAD, FOLLOWING THE STANDARD OF IEC 61000-3-2

EMI：

IEC61000-3-2, FCC, CISPR 22(EN 55022)

EMS：

EN 61000-4-2 ESD, EN61000-4-4 EFT, EN61000-4-5 SURGE

SAFETY：

TO MEET UL, CUL, TUV, CCC

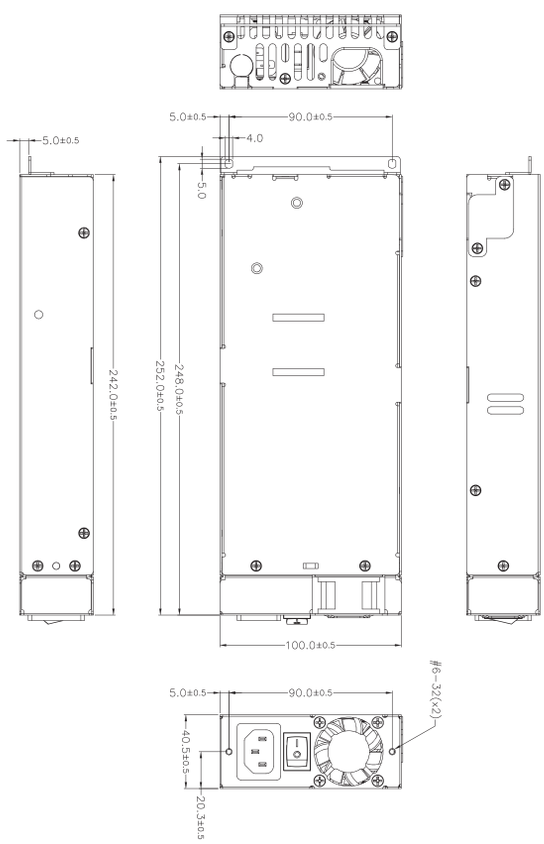

E143756

H1M-5600V
H1M-5700V
H1M-5800V

OUTPUT CHARACTERISTICS

MODEL	WATTAGE	OUTPUT					
		+5V	+12V	+3.3V	-5V	-12V	+5VSB
H1M-5600V	600W	25A	48A	25A	X	0.8A	3.5A
H1M-5700V	700W	25A	48A	25A	X	0.8A	3.5A
H1M-5800V	800W	25A	57A	25A	X	0.8A	3.5A
REGULATION LOAD		±5%	±5%	±5%	X	±5%	±5%
RIPPLE AND NOISE		60mV	120mV	60mV	X	120mV	60mV

REMARKS :
THE OUTPUT CURRENT OF +5V AND +3.3V NOT EXCEED : 40A

SPECIFICATION :

TEMPERATURE RANGE : OPERATING 0℃ ~50℃ , STORAGE –20℃ ~80℃

EFFICIENCY : TYPICAL >80% @ 115V FULL LOAD

PFC CAN REACH THE TARGET OF 95% AT 115V/230VAC, FULL LOAD

POWER GOOD SIGNAL : ON DELAY 100 ms TO 500 ms, OFF DELAY 1 ms

HOLD UP TIME : 16 ms MINIMUM AT 115AC INPUT; 20ms MINIMUM AT 230 AC INPUT

OUTPUT PROTECTION : OPP / OVP / OCP / SCP

DIMENSION : 250mm (D) x 100mm (W) x 40.5mm (H)

THE POWER-SUPPLY IS FOR CHASSIS-ASSEMBLY ONLY AND IS NOT ALLOWED TO BE OPERATED AS STAND-ALONE COMPONENT. FINAL ASSEMBLY HAS TO COMPLY WITH CORRESPONDING EMC- AND SAFETY-REGULATIONS.

INPUT CHARACTERISTICS

VOLTAGE :

90~264VAC FULL RANGE

FREQUENCY :

47 ~ 63HZ

INPUT CURRENT :

WATTAGE	115V	230V
600W	10A	5A
700W	10A	5A
800W	12A	6A

INRUSH CURRENT :

40/60 AMPS@115/230VAC

POWER FACTOR CORRECTION :

PFC CAN REACH THE TARGET OF 95% AT 115/230VAC, FULL LOAD

EMI :

IEC61000-3-2, FCC, CISPR 22(EN 55022)

EMS :

EN 61000-4-2 ESD, EN61000-4-4 EFT, EN61000-4-5 SURGE

SAFETY :

TO MEET UL, CUL, TUV

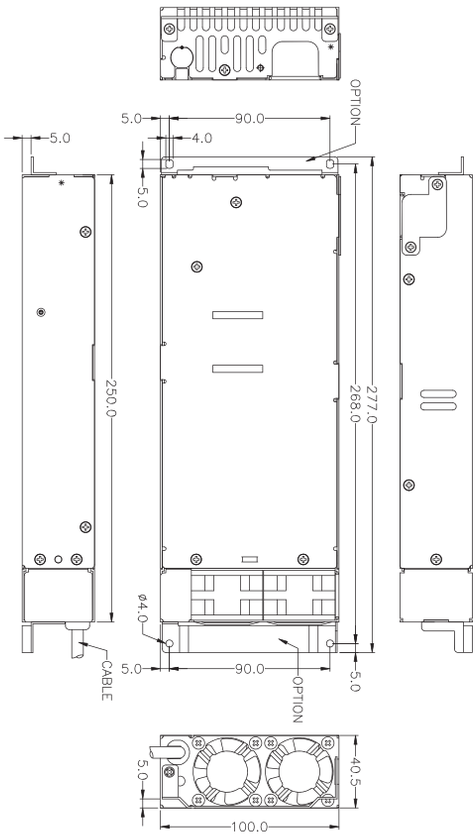

1U

H1M-5607V
H1M-5707V
H1M-5807V

OUTPUT CHARACTERISTICS

MODEL	WATTAGE	OUTPUT					
		+5V	+12V	+3.3V	-5V	-12V	+5VSB
H1M-5607V	600W	25A	48A	25A	X	0.8A	3.5A
H1M-5707V	700W	25A	48A	25A	X	0.8A	3.5A
H1M-5807V	800W	25A	57A	25A	X	0.8A	3.5A
REGULATION LOAD		±5%	±5%	±5%	X	±5%	±5%
RIPPLE AND NOISE		60mV	120mV	60mV	X	120mV	60mV

REMARKS：
THE OUTPUT CURRENT OF +5V AND +3.3V NOT EXCEED：40A

SPECIFICATION：

TEMPERATURE RANGE：OPERATING 0℃ ~50℃ , STORAGE –20℃ ~80℃

EFFICIENCY：TYPICAL >80% @ 115V FULL LOAD

POWER GOOD SIGNAL：ON DELAY 100 ms TO 500 ms, OFF DELAY 1 ms

HOLD UP TIME：16 ms MINIMUM AT 115AC INPUT; 20ms MINIMUM AT 230 AC INPUT

OUTPUT PROTECTION：OPP / OVP / OCP / SCP

DIMENSION：275mm (D) x 100mm (W) x 40.5mm (H)

THE POWER-SUPPLY IS FOR CHASSIS-ASSEMBLY ONLY AND IS NOT ALLOWED TO BE OPERATED AS STAND-ALONE COMPONENT. FINAL ASSEMBLY HAS TO COMPLY WITH CORRESPONDING EMC- AND SAFETY-REGULATIONS.

INPUT CHARACTERISTICS

VOLTAGE：

90~264VAC FULL RANGE

FREQUENCY：

47 ~ 63HZ

INPUT CURRENT：

WATTAGE	115V	230V
600W	10A	5A
700W	10A	5A
800W	12A	6A

INRUSH CURRENT：

40/60 AMPS@115/230VAC

POWER FACTOR CORRECTION：

PFC CAN REACH THE TARGET OF 95% AT 115/230VAC, FULL LOAD

EMI：

IEC61000-3-2, FCC, CISPR 22(EN 55022)

EMS：

EN 61000-4-2 ESD, EN61000-4-4 EFT, EN61000-4-5 SURGE

SAFETY：

TO MEET UL, CUL, TUV

E143756

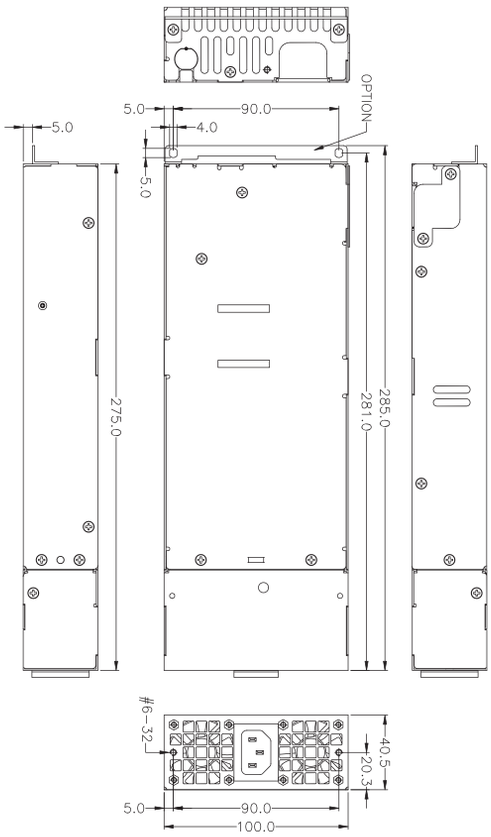

P1D-5400V
P1D-5600V
P1D-5700V

INPUT CHARACTERISTICS

VOLTAGE：

90~264VAC FULL RANGE

FREQUENCY：

47 ~ 63HZ

INPUT CURRENT：

WATTAGE	115V	230V
400W	6A	3A
700W	10A	5A
800W	10A	5A

INRUSH CURRENT：

30/60 AMPS @115/230VAC

POWER FACTOR CORRECTION：

PFC CAN REACH THE TARGET OF 95% @ 115V, FULL LOAD,FOLLOWING THE STANDARD OF IEC 61000-3-2

EMI：

IEC61000-3-2, FCC, CISPR 22(EN 55022)

EMS：

EN 61000-4-2 ESD, EN61000-4-4 EFT, EN61000-4-5 SURGE

SAFETY：

TO MEET UL, CUL, TUV, CCC

E143756

OUTPUT CHARACTERISTICS

MODEL	WATTAGE	OUTPUT					
		+5V1	+12V1	+3.3V1	-5V	-12V1	+5VSB1
		+5V2	+12V2	+3.3V2		-12V2	+5VSB2
P1D-5400V	400W	20A	30A	20A	X	0.8A	3.5A
P1D-5600V	600W	25A	45A	25A	X	0.8A	3.5A
P1D-5700V	700W	25A	50A	25A	X	0.8A	3.5A
REGULATION LOAD		±5%	±5%	±5%	X	±5%	±5%
RIPPLE AND NOISE		50mV	120mV	50mV	X	50mV	50mV

REMARKS：
TOTAL OUTPUT POWER OF V1 AND V2 NOT EXCEED 400W / 600W / 700W
THE OUTPUT CURRENT OF 5V AND 3.3V NOT EXCEED 40A

SPECIFICATION：

TEMPERATURE RANGE：OPERATING 0℃ ~50℃

EFFICIENCY：TYPICAL 80-83% AT 25℃ 115V FULL LOAD

POWER GOOD SIGNAL：ON DELAY 100mS TO 500mS · OFF DELAY 1mS

HOLD UP TIME：16mS MINIMUM AT FULL LOAD & NOMINAL INPUT VOLTAGE

OUTPUT PROTECTION：OPP / OVP / SCP

REMOTE ON/OFF CONTROL

3.3V & 5V REMOTE SENSING

DIMENSION：300mm(D) × 100mm (W) × 40.5mm (H)

THE POWER-SUPPLY IS FOR CHASSIS-ASSEMBLY ONLY AND IS NOT ALLOWED TO BE OPERATED AS STAND-ALONE COMPONENT. FINAL ASSEMBLY HAS TO COMPLY WITH CORRESPONDING EMC- AND SAFETY-REGULATIONS.

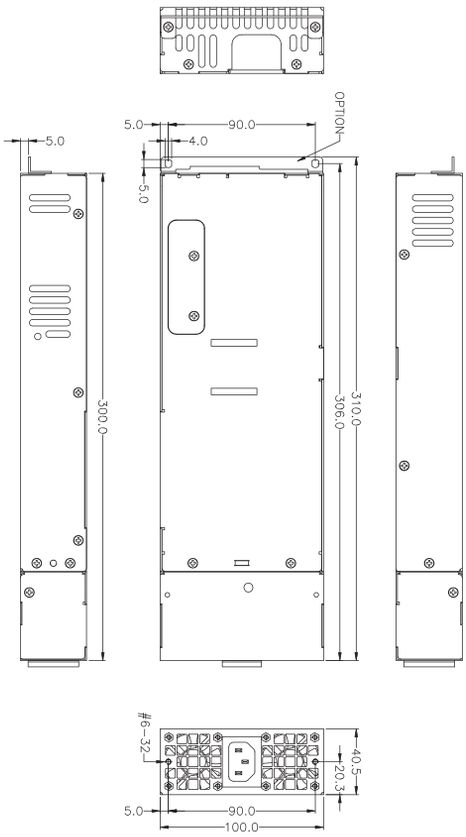

1U

P1D-3940V

OUTPUT CHARACTERISTICS

MODEL	WATTAGE	OUTPUT					
		+5V1	+12V1	+3.3V	-5V	-12V	+5VSB1
		+5V2	+12V2				+5VSB2
P1D-3940V	940W	25A	70A	X	X	X	2.5A
REGULATION LOAD		±5%	±5%	X	X	X	±5%
RIPPLE AND NOISE		50mV	120mV	X	X	X	50mV

REMARKS：
TOTAL CURRENT OF V1 AND V2 NOT EXCEED EACH MAX LOAD
(FOR EXAMPLE：+12V1 & +12V2 NOT EXCEED 70A)
TOTAL OUTPUT POWER OF V1 AND V2 NOT EXCEED 940W

SPECIFICATION：

TEMPERATURE RANGE：OPERATING 0℃～ 50℃

EFFICIENCY：TYPICAL 80% AT 25℃ 115V FULL LOAD

POWER GOOD SIGNAL：ON DELAY 100mS TO 500mS · OFF DELAY 1Ms

HOLD UP TIME：16mS MINIMUM AT FULL LOAD & NOMINAL INPUT VOLTAGE

OUTPUT PROTECTION：OPP / OVP / SCP

REMOTE ON/OFF CONTROL

REMOTE SENSING

DIMENSION：300mm (D) × 100mm (W) × 40.5mm (H)

THE POWER-SUPPLY IS FOR CHASSIS-ASSEMBLY ONLY AND IS NOT ALLOWED TO BE OPERATED AS STAND-ALONE COMPONENT. FINAL ASSEMBLY HAS TO COMPLY WITH CORRESPONDING EMC- AND SAFETY-REGULATIONS.

INPUT CHARACTERISTICS

VOLTAGE：

90~264VAC FULL RANGE

FREQUENCY：

47 ～ 63HZ

INPUT CURRENT：

15/7.5 AMPS MAXIMUM AT ANY LOW/HIGH RANGE INPUT VOLTAGE

INRUSH CURRENT：

30/60 AMPS @115/230VAC

POWER FACTOR CORRECTION：

PFC CAN REACH THE TARGET OF 95% @ 230V, FULL LOAD, FOLLOWING THE STANDARD OF IEC 61000-3-2

EMI：

IEC61000-3-2, FCC, CISPR 22(EN 55022)

EMS：

EN 61000-4-2 ESD, EN61000-4-4 EFT, EN61000-4-5 SURGE

SAFETY：

TO MEET UL, CUL, TUV

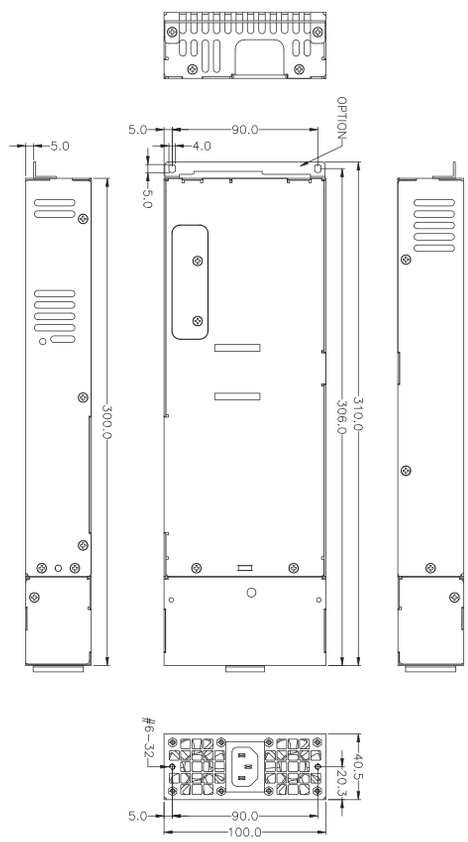

H1W-5AD0V

OUTPUT CHARACTERISTICS

MODEL	WATTAGE	OUTPUT					
		+5V	+12V	+3.3V	-5V	-12V	+5VSB
H1W-5AD0V	1200W	36A		31A	X	0.5A	4A
	1400W	36A	116A	31A	X	0.5A	4A
REGULATION LOAD		±5%	±5%	±5%	X	±5%	±5%
RIPPLE AND NOISE		50mV	120mV	50mV	X	120mV	50mV

REMARKS：
1. TOTAL OUTPUT POWER OF +5V AND +3.3V NOT EXCEED 210W.
2. TOTAL OUTPUT POWER NOT EXCEED 1400W FOR 180~264VAC.
3. TOTAL OUTPUT POWER NOT EXCEED 1200W FOR 103~132VAC.

SPECIFICATION：

TEMPERATURE RANGE：OPERATING 0℃ ~50℃ , STORAGE –20℃ ~80℃

EFFICIENCY:84% TYPICAL @ 230V FULL LOAD

POWER GOOD SIGNAL：ON DELAY 100 ms TO 500 ms, OFF DELAY 1 ms

HOLD UP TIME：17mS MINIMUM AT 800W & NOMINAL INPUT VOLTAGE

OUTPUT PROTECTION：OPP / OVP / SCP

3.3V/5V REMOTE SENSING

DIMENSION：295mm (D) × 100mm (W) × 40mm (H)

THE POWER-SUPPLY IS FOR CHASSIS-ASSEMBLY ONLY AND IS NOT ALLOWED TO BE OPERATED AS STAND-ALONE COMPONENT. FINAL ASSEMBLY HAS TO COMPLY WITH CORRESPONDING EMC- AND SAFETY-REGULATIONS.

INPUT CHARACTERISTICS

VOLTAGE：

115 - 240 VAC FULL RANGE

FREQUENCY：

47 ~ 63HZ

INPUT CURRENT：

15/10 AMPS MAXIMUM AT ANY LOW/HIGH RANGE INPUT VOLTAGE

INRUSH CURRENT：

15/30 AMPS @ 110/230VAC

POWER FACTOR CORRECTION：

PFC CAN REACH THE TARGET OF 95% @ 230V, FULL LOAD, FOLLOWING THE STANDARD OF IEC 61000-3-2

EMI：

IEC61000-3-2, FCC, CISPR 22(EN 55022)

EMS：

EN 61000-4-2 ESD, EN61000-4-4 EFT, EN61000-4-5 SURGE

SAFETY：

TO MEET UL&CUL, TUV

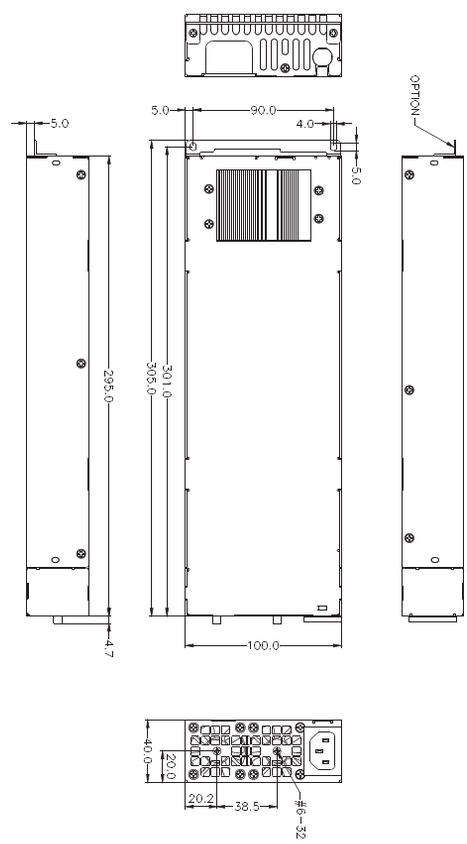

E143756

P2H-5400V
P2H-5500V
P2H-5550V
P2H-5501V

INPUT CHARACTERISTICS

VOLTAGE：

90~264 VAC FULL RANGE

FREQUENCY：

47 ~ 63HZ

INPUT CURRENT：

10/5 AMPS AT ANY LOW/HIGH RANGE INPUT VOLTAGE

INRUSH CURRENT：

40/60 AMPS @ 115/230VAC

POWER FACTOR CORRECTION：

PFC CAN REACH THE TARGET OF 95% AT 115/230VAC, FULL LOAD

EMI：

IEC61000-3-2, FCC, CISPR 22(EN 55022)

EMS：

EN 61000-4-2 ESD, EN61000-4-4 EFT, EN61000-4-5 SURGE

SAFETY：

TO MEET UL&CUL, TUV, CCC

E143756

OUTPUT CHARACTERISTICS

MODEL	WATTAGE	OUTPUT					
		+5V	+12V	+3.3V	-5V	-12V	+5VSB
P2H-5400V	400W	22A	32A	22A	X	0.8A	3.5A
P2H-5500V	500W	25A	40A	25A	X	0.8A	3.5A
P2H-5550V	550W	25A	40A	25A	X	0.8A	3.5A
P2H-5501V	500W	40A	40A	40A	X	3A	3.5A
REGULATION LOAD		±5%	±5%	±5%	X	±5%	±5%
RIPPLE AND NOISE		60mV	120mV	60mV	X	120mV	60mV

REMARKS：
+5V AND +3.3V TOTAL OUTPUT MAX：35A
+5V AND +3.3V TOTAL OUTPUT MAX：200W (92H-550H)

SPECIFICATION：

TEMPERATURE RANGE：OPERATING 0℃ ~50℃ , STORAGE –20℃ ~80℃

HOLD UP TIME:16mS MINIMUM AT FULL LOAD & NOMINAL INPUT VOLTAGE

EFFICIENCY：80% TYPICAL @ FULL LOAD

POWER GOOD SIGNAL：ON DELAY 100mS TO 500mS · OFF DELAY 1mS

OUTPUT PROTECTION：OPP / OVP / OCP / SCP

REMOTE ON/OFF CONTROL

3.3V & 5V REMOTE SENSING DESIGN

DIMENSION：215mm (D) x 100mm (W) x 70mm (H)

THE POWER-SUPPLY IS FOR CHASSIS-ASSEMBLY ONLY AND IS NOT ALLOWED TO BE OPERATED AS STAND-ALONE COMPONENT. FINAL ASSEMBLY HAS TO COMPLY WITH CORRESPONDING EMC- AND SAFETY-REGULATIONS.

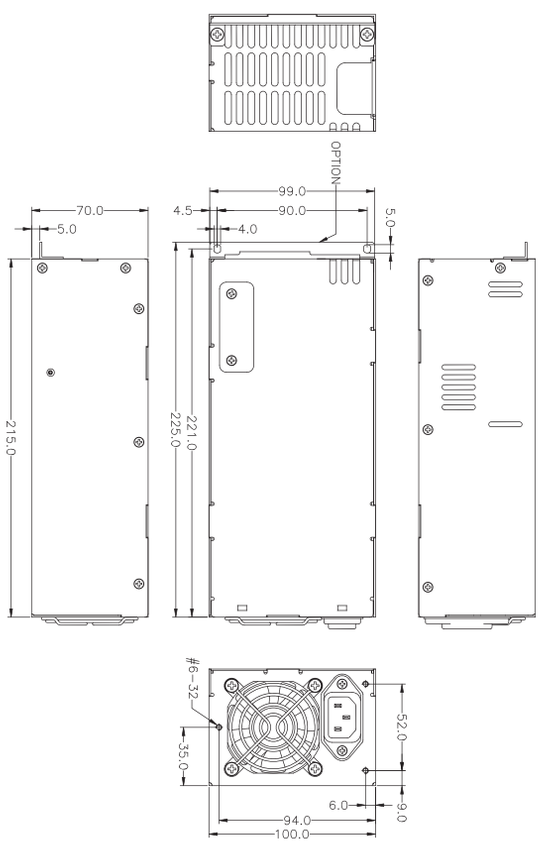

P2G-5500G
P2G-5600G
P2G-5650G

OUTPUT CHARACTERISTICS

MODEL	WATTAGE	OUTPUT					
		+5V	+12V	+3.3V	-5V	-12V	+5VSB
P2G-5500G	500W	20A	40A	20A	X	0.5A	3A
P2G-5600G	600W	25A	48A	25A	X	0.5A	3A
P2G-5650G	650W	25A	53A	25A	X	0.5A	3A
REGULATION LOAD		±5%	±5%	±5%	X	±5%	±5%
RIPPLE AND NOISE		60mV	120mV	60mV	X	120mV	60mV

REMARKS：
+5V AND +3.3V TOTAL OUTPUT MAX：140W/160W；
+5V, +3.3V AND +12V TOTAL MAX：480/581.5W/630W
TOTAL POWER 500W/600W

SPECIFICATION：

TEMPERATURE RANGE：OPERATING 0℃ ~ 50℃ , STORAGE -20℃ ~80℃

HOLD UP TIME：16 mS MINIMUM AT FULL LOAD & NORMAL INPUT VOLTAGE

EFFICIENCY：87-90% TYPICAL @ 115V FULL LOAD

POWER GOOD SIGNAL：ON DELAY 100 ms TO 500 ms, OFF DELAY 1 ms

OUTPUT PROTECTION：OPP / OVP / OCP / SCP

LEAKAGE CURRENT：3.5mA. MAX. AT NOMINAL VOLTAGE 250VAC

DIMENSION：240mm (D) x 100mm (W) x 70mm (H)

THE POWER-SUPPLY IS FOR CHASSIS-ASSEMBLY ONLY AND IS NOT ALLOWED TO BE OPERATED AS STAND-ALONE COMPONENT. FINAL ASSEMBLY HAS TO COMPLY WITH CORRESPONDING EMC- AND SAFETY-REGULATIONS.

INPUT CHARACTERISTICS

VOLTAGE：

90~264 VAC FULL RANGE

FREQUENCY：

47 ~ 63HZ

INPUT CURRENT：

7/3.5A AT ANY LOW/HIGH RANGE INPUT VOLTAGE

10/5A AT ANY LOW/HIGH RANGE INPUT VOLTAGE

INRUSH CURRENT：

50/100 AMPS @ 115/230VAC

POWER FACTOR CORRECTION：

PFC CAN REACH THE TARGET OF 95% @ 115V, FULL LOAD, FOLLOWING THE STANDARD OF IEC 61000-3-2

EMI：

IEC61000-3-2, FCC, CISPR 22(EN 55022)

EMS：

EN 61000-4-2 ESD, EN61000-4-4 EFT, EN61000-4-5 SURGE

SAFETY：

TO MEET UL&CUL, TUV, CCC

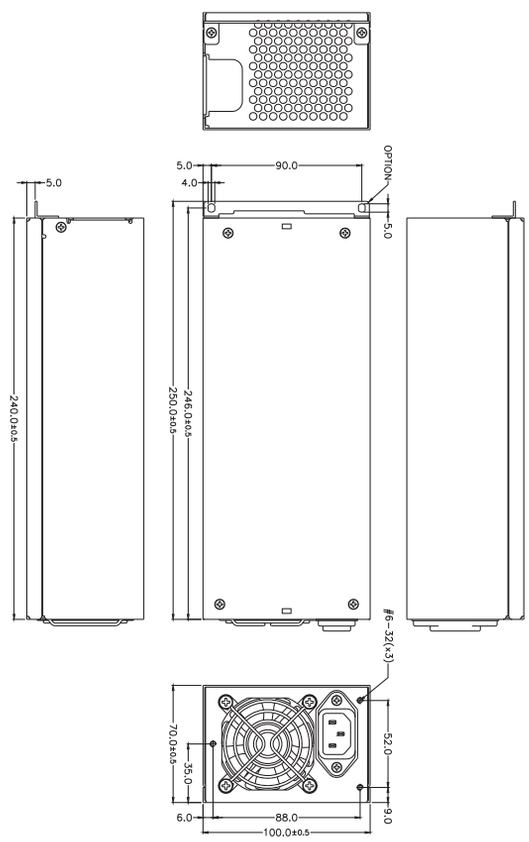

E143756

P2M-5600V
P2M-5700V
P2M-5800V

OUTPUT CHARACTERISTICS

MODEL	WATTAGE	OUTPUT					
		+5V	+12V	+3.3V	-5V	-12V	+5VSB
P2M-5600V	600W	25A	46A	25A	X	0.8A	3.0A
P2M-5700V	700W	25A	50A	25A	X	0.8A	3.0A
P2M-5800V	800W	25A	62A	25A	X	0.8A	3.0A
REGULATION LOAD		±5%	±5%	±5%	X	±10%	±5%
RIPPLE AND NOISE		60mV	120mV	60mV	X	120mV	60mV

REMARKS :
+5V AND +3.3V TOTAL OUTPUT MAX : 170W

SPECIFICATION :

TEMPERATURE RANGE : OPERATING 0°C ~ 50°C , STORAGE -20°C ~ 80°C

HUMIDITY : OPERATING :20%-80%, NON-OPERATING :10%-90%

HOLD UP TIME : 16mS MINIMUM AT FULL LOAD & NORMAL INPUT VOLTAGE

EFFICIENCY : TYPICAL 80~84% @ FULL LOAD

OUTPUT PROTECTION : OPP / OVP / OCP / SCP

LEAKAGE CURRENT : 3.5mA MAX. AT NOMINAL VOLTAGE 264VAC

REMOTE ON/OFF CONTROL

DIMENSION : 280mm (D) X 100mm (W) X 70mm (H)

THE POWER-SUPPLY IS FOR CHASSIS-ASSEMBLY ONLY AND IS NOT ALLOWED TO BE OPERATED AS STAND-ALONE COMPONENT. FINAL ASSEMBLY HAS TO COMPLY WITH CORRESPONDING EMC- AND SAFETY-REGULATIONS.

INPUT CHARACTERISTICS

VOLTAGE :

90~264 VAC FULL RANGE

FREQUENCY :

47 ~ 63HZ

INPUT CURRENT :

WATTAGE	115V	230V
600W	9A	4A
700W	11A	5A
800W	12A	6A

INRUSH CURRENT :

35/70 AMPS @ 115/230VAC

POWER FACTOR CORRECTION :

PFC CAN REACH THE TARGET OF 95% AT 115/230VAC, FULL LOAD

EMI :

IEC61000-3-2, FCC, CISPR 22(EN 55022)

EMS :

EN 61000-4-2 ESD, EN61000-4-4 EFT, EN61000-4-5 SURGE

SAFETY :

TO MEET UL&CUL, TUV, CCC

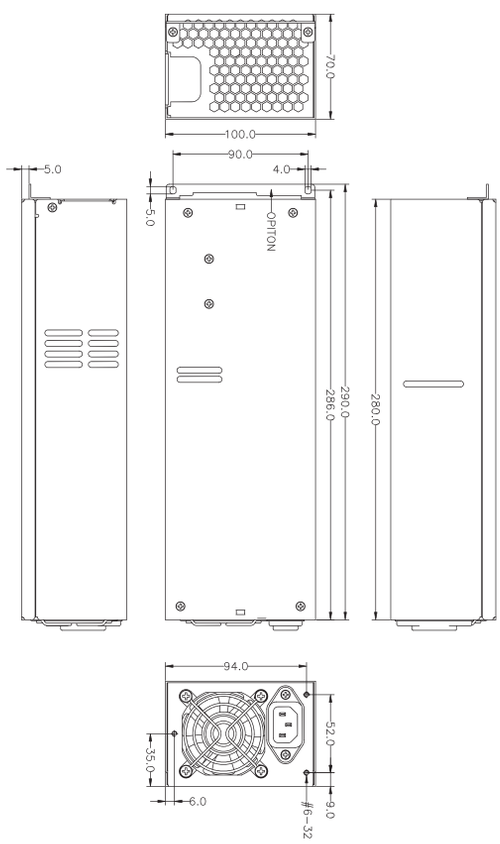

HG2-5400V
HG2-5500V
HG2-5600V

INPUT CHARACTERISTICS

VOLTAGE :

90~264 VAC FULL RANGE

FREQUENCY :

47 ~ 63HZ

INPUT CURRENT :

WATTAGE	115V	230V
400W	6A	3A
500W	8A	4A
600W	10A	5A

INRUSH CURRENT :

20/40AMPS @ 115/30VAC

POWER FACTOR CORRECTION :

PFC CAN REACH THE TARGET OF 95% AT 115/230VAC, FULL LOAD

EMI :

IEC61000-3-2, FCC, CISPR 22(EN 55022)

EMS :

EN 61000-4-2 ESD, EN61000-4-4 EFT, EN61000-4-5 SURGE

SAFETY :

TO MEET UL, CUL, TUV, CCC

E143756

OUTPUT CHARACTERISTICS

MODEL	WATTAGE	OUTPUT					
		+5V	+12V	+3.3V	-5V	-12V	+5VSB
HG2-5400V	400W	20A	30A	20A	X	0.8A	3.5A
HG2-5500V	500W	20A	38A	20A	X	0.8A	3.5A
HG2-5600V	600W	25A	45A	25A	X	0.8A	3.5A
REGULATION LOAD		±5%	±5%	±5%	X	±5%	±5%
RIPPLE AND NOISE		50mV	120mV	50mV	X	120mV	50mV

REMARKS :
THE OUTPUT CURRENT OF +5V & +3.3V NOT EXCEED 40A

SPECIFICATION :

TEMPERATURE RANGE : OPERATING 0°C ~50°C

HOLD UP TIME : 16 ms MINIMUM AT FULL LOAD & NORMAL INPUT VOLTAGE

EFFICIENCY : TYPICAL 80-85% @115V FULL LOAD

POWER GOOD SIGNAL : ON DELAY 100 ms TO 500 ms, OFF DELAY 1 ms

OUTPUT PROTECTION : OPP / OVP / SCP, RESTART AFTER PROTECTION

LEAKAGE CURRENT : 1.5mA MAX. AT NOMINAL VOLTAGE VAC

REMOTE ON/OFF CONTROL

DIMENSION : 140mm (D) x150mm (W) x 86mm (H)

THE POWER-SUPPLY IS FOR CHASSIS-ASSEMBLY ONLY AND IS NOT ALLOWED TO BE OPERATED AS STAND-ALONE COMPONENT. FINAL ASSEMBLY HAS TO COMPLY WITH CORRESPONDING EMC- AND SAFETY-REGULATIONS.

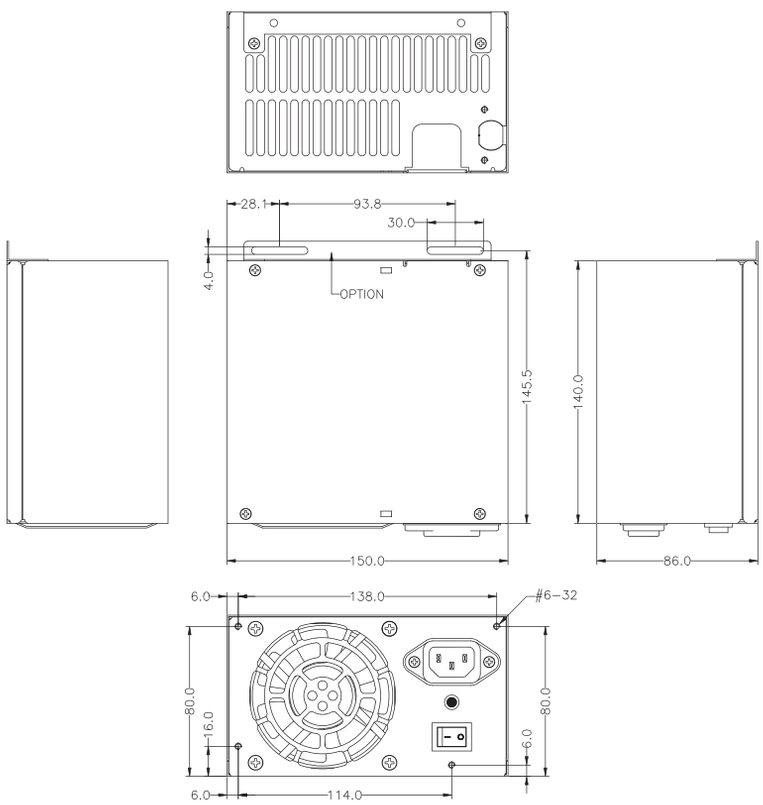

PS2

HG2-5400E
HG2-5500E
HG2-5600E

Erp ready

INPUT CHARACTERISTICS

VOLTAGE：

90~264 VAC FULL RANGE

FREQUENCY：

47 ~ 63HZ

INPUT CURRENT：

WATTAGE	115V	230V
400W	5.5A	3A
500W	7A	3.5A
600W	8.5A	4.5A

INRUSH CURRENT：

35/80 MAX. FOR 115/230VAC

POWER FACTOR CORRECTION：

PFC CAN REACH THE TARGET OF 95% @ 115V, FULL LOAD, FOLLOWING THE STANDARD OF IEC 61000-3-2

EMI：

IEC61000-3-2, FCC, CISPR 22(EN 55022)

EMS：

EN 61000-4-2 ESD, EN61000-4-4 EFT, EN61000-4-5 SURGE

SAFETY：

TO MEET UL, CUL, TUV, CCC

E143756

OUTPUT CHARACTERISTICS

MODEL	WATTAGE	OUTPUT					
		+5V	+12V	+3.3V	-5V	-12V	+5VSB
HG2-5400E	400W	21A	33A	15A	X	0.5A	3A
HG2-5500E	500W	23A	41A	18A	X	0.5A	3A
HG2-5600E	600W	25A	50A	20A	X	0.5A	3.5A
REGULATION LOAD		±5%	±5%	±5%	X	±5%	±5%
RIPPLE AND NOISE		50mV	120mV	50mV	X	120mV	50mV

REMARKS：
TOTAL OUTPUT CURRENT OF +5V AND +3.3V NOT EXCEED 110W / 125W / 135W
TOTAL POWER：400W / 500W / 600W

SPECIFICATION：

TEMPERATURE RANGE：OPERATING 0°C ~ 50°C ; STORAGE -20°C ~ 80°C

HOLD UP TIME：16 ms MINIMUM AT FULL LOAD & NORMAL INPUT VOLTAGE

EFFICIENCY：TYPICAL 87% @115V FULL LOAD

POWER GOOD SIGNAL：ON DELAY 100 ms TO 500 ms, OFF DELAY 1 ms

OUTPUT PROTECTION：OPP / OVP / SCP, RESTART AFTER PROTECTION

LEAKAGE CURRENT：3.5MA MAX. AT NOMINAL VOLTAGE VAC

REMOTE ON/OFF CONTROL

ErP READY

DIMENSION：140mm (D) x150mm (W) x 86mm (H)

THE POWER-SUPPLY IS FOR CHASSIS-ASSEMBLY ONLY AND IS NOT ALLOWED TO BE OPERATED AS STAND-ALONE COMPONENT. FINAL ASSEMBLY HAS TO COMPLY WITH CORRESPONDING EMC- AND SAFETY-REGULATIONS.

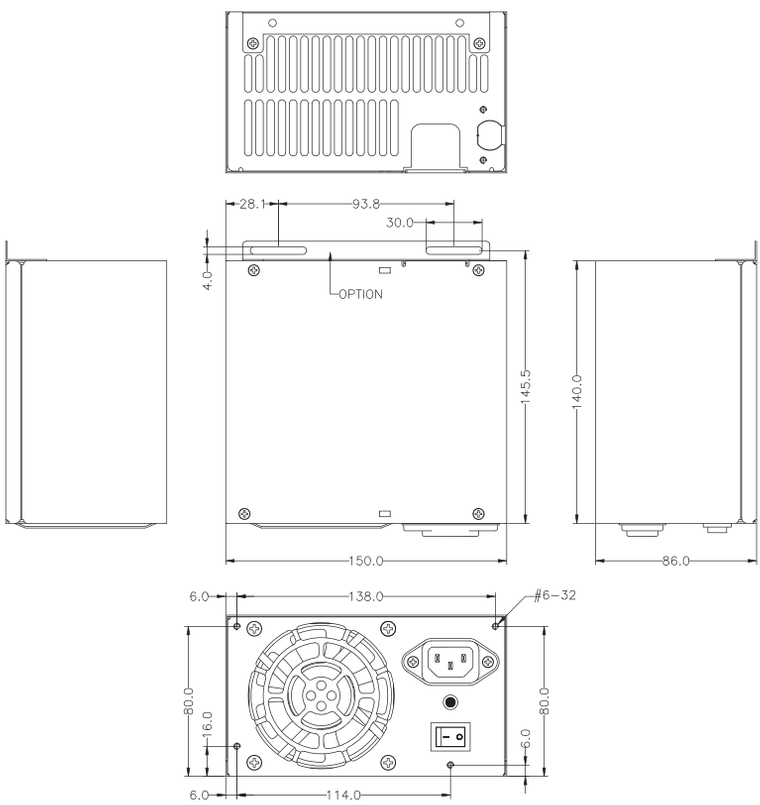

HU2-5560V
HU2-5660V
HU2-5760V
HU2-5860V

INPUT CHARACTERISTICS

VOLTAGE：

90~264 VAC FULL RANGE

FREQUENCY：

47 ~ 63HZ

INPUT CURRENT：

WATTAGE	115V	230V
560W	8A	4A
660W	10A	5A
760W	12A	6A
860W	13A	7A

INRUSH CURRENT：

20/40 AMPS @ 115/230VAC

POWER FACTOR CORRECTION：

PFC CAN REACH THE TARGET OF 95% AT 115/230VAC, FULL LOAD

EMI：

IEC61000-3-2, FCC, CISPR 22(EN 55022)

EMS：

EN 61000-4-2 ESD, EN61000-4-4 EFT, EN61000-4-5 SURGE

SAFETY：

TO MEET UL&CUL, TUV, CCC

E143756

OUTPUT CHARACTERISTICS

MODEL	WATTAGE	OUTPUT					
		+5V	+12V	+3.3V	-5V	-12V	+5VSB
HU2-5560V	560W	22A	40A	22A	X	0.8A	3.5A
HU2-5660V	660W	25A	50A	25A	X	0.8A	3.5A
HU2-5760V	760W	25A	55A	25A	X	0.8A	3.5A
HU2-5860V	860W	25A	60A	25A	X	0.8A	3.5A
REGULATION LOAD		±5%	±5%	±5%	X	±5%	±5%
RIPPLE AND NOISE		50mV	120mV	50mV	X	120mV	50mV

REMARKS：
THE OUTPUT CURRENT OF 5V & 3.3V NOT EXCEED 40A WITH 12CM FAN

SPECIFICATION：

TEMPERATURE RANGE：OPERATING 0°C ~50°C

HOLD UP TIME：16mS MINIMUM AT FULL LOAD & NOMINAL INPUT VOLTAGE

EFFICIENCY：TYPICAL 80-85% @ 115V FULL LOAD

POWER GOOD SIGNAL：ON DELAY 100mS TO 500mS · OFF DELAY 1mS

OUTPUT PROTECTION：OPP / OVP / OCP / SCP, RESTART AFTER PROTECTION

LEAKAGE CURRENT：1.5mA MAX. AT NOMINAL VOLTAGE VAC

REMOTE ON/OFF CONTROL

DIMENSION：140mm (D) X 150mm (W) X 86mm (H)

THE POWER-SUPPLY IS FOR CHASSIS-ASSEMBLY ONLY AND IS NOT ALLOWED TO BE OPERATED AS STAND-ALONE COMPONENT. FINAL ASSEMBLY HAS TO COMPLY WITH CORRESPONDING EMC- AND SAFETY-REGULATIONS.

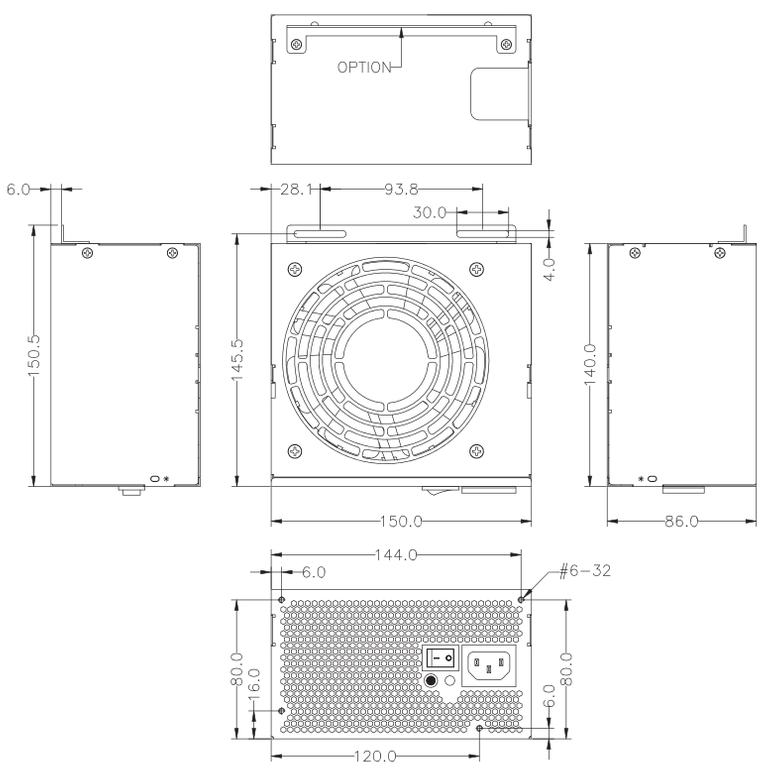

PS2

PSM-5660V
PSM-5760V
PSM-5860V

OUTPUT CHARACTERISTICS

MODEL	WATTAGE	OUTPUT					
		+5V	+12V	+3.3V	-5V	-12V	+5VSB
PSM-5660V	660W	25A	50A	25A	X	0.8A	3.5A
PSM-5760V	760W	25A	55A	25A	X	0.8A	3.5A
PSM-5860V	860W	25A	60A	25A	X	0.8A	3.5A
REGULATION LOAD		±5%	±5%	±5%	X	±5%	±5%
RIPPLE AND NOISE		50mV	120mV	50mV	X	120mV	50mV

REMARKS :
+5V AND +3.3V TOTAL MAX : 40A

SPECIFICATION :

TEMPERATURE RANGE : OPERATING 0°C ~ 50°C

HOLD UP TIME : WHEN POWER SHUTDOWN DC OUTPUT 5V MUST BE MAINTAIN 16ms IN REGULATION LIMIT AT NORMAL INPUT VOLTAGE

EFFICIENCY : TYPICAL 80-85% @ 115V FULL LOAD

OUTPUT PROTECTION : OPP / OVP / SCP, RESTART AFTER PROTECTION

LEAKAGE CURRENT : 1.5mA MAX. AT NOMINAL VOLTAGE VAC

REMOTE ON/OFF CONTROL

DIMENSION : 160mm (D) x 150mm (W) x 86mm (H)

THE POWER-SUPPLY IS FOR CHASSIS-ASSEMBLY ONLY AND IS NOT ALLOWED TO BE OPERATED AS STAND-ALONE COMPONENT. FINAL ASSEMBLY HAS TO COMPLY WITH CORRESPONDING EMC- AND SAFETY-REGULATIONS.

INPUT CHARACTERISTICS

VOLTAGE :

90~264 VAC FULL RANGE

FREQUENCY :

47 ~ 63HZ

INPUT CURRENT :

WATTAGE	115V	230V
600W	10A	5A
760W	12A	6A
860W	13A	7A

INRUSH CURRENT :

20/40 AMPS @ 120/230VAC

POWER FACTOR CORRECTION :

PFC CAN REACH THE TARGET OF 95% AT 115/230VAC, FULL LOAD

EMI :

IEC61000-3-2, FCC, CISPR 22(EN 55022)

EMS :

EN 61000-4-2 ESD, EN61000-4-4 EFT, EN61000-4-5 SURGE

SAFETY :

TO MEET UL&CUL, TUV, CCC

E143756

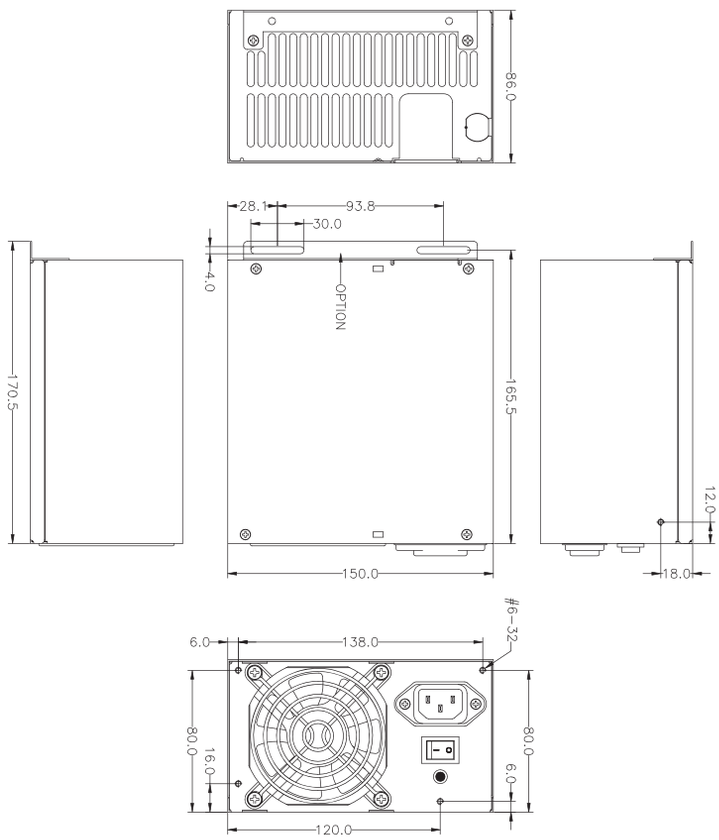

PSL-6A00V
PSL-6C00V

OUTPUT CHARACTERISTICS

MODEL	WATTAGE	OUTPUT					
		+5V	+12V1	+12V2	+3.3V	-12V	+5VSB
PSL-6A00V	1000W	25A	50A	50A	25A	0.8A	3.5A
PSL-6C00V	1200W	25A	50A	50A	25A	0.8A	3.5A
REGULATION LOAD		±5%	±5%	±5%	±5%	±5%	±5%
RIPPLE AND NOISE		60mV	120mV	120mV	60mV	120mV	60mV

REMARKS：
+5V AND +3.3V TOTAL MAX. POWER：170W
+3.3V & +5V AND +12V2 MAX. POWER：600W

SPECIFICATION：

TEMPERATURE RANGE：OPERATING 0℃ ~40℃ ; STORAGE TEMPERATURE：-20℃ ~80℃

HOLD UP TIME：18mS MINIMUM AT 90V FULL LOAD & NOMINAL INPUT VOLTAGE

EFFICIENCY：TYPICAL 81%-86% (1000W) / 83%-88% (1200W) @ 115V FULL LOAD

POWER GOOD SIGNAL：ON DELAY 100 ms TO 500 ms, OFF DELAY 1 ms

OUTPUT PROTECTION：OPP / OVP / SCP / OCP , RESTART AFTER PROTECTION

LEAKAGE CURRENT：3.5mA MAX. AT NOMINAL VOLTAGE VAC

REMOTE ON/OFF CONTROL

I2C FEATURES (OPTIONAL)

DIMENSION：220mm (D) x 150mm (W) x 86mm (H)

THE POWER-SUPPLY IS FOR CHASSIS-ASSEMBLY ONLY AND IS NOT ALLOWED TO BE OPERATED AS STAND-ALONE COMPONENT. FINAL ASSEMBLY HAS TO COMPLY WITH CORRESPONDING EMC- AND SAFETY-REGULATIONS.

INPUT CHARACTERISTICS

VOLTAGE：

90~264 VAC FULL RANGE

FREQUENCY：

47 ~ 63HZ

INPUT CURRENT：

WATTAGE	115V	230V
1000W	14A	7A
1200W	15A	7.5A

INRUSH CURRENT：

20/40 AMPS @ 110/220VAC

POWER FACTOR CORRECTION：

PFC CAN REACH THE TARGET OF 95% AT 115/230VAC, FULL LOAD

EMI：

IEC61000-3-2, FCC, CISPR 22(EN 55022)

EMS：

EN 61000-4-2 ESD, EN61000-4-4 EFT, EN61000-4-5 SURGE

SAFETY：

TO MEET UL&CUL, TUV, CCC

E143756

R1T2-5120V0H

OUTPUT CHARACTERISTICS

MODEL	WATTAGE	OUTPUT					
		+5V	+12V	+3.3V	-5V	-12V	+5VSB
R1T2-5120V0H	120W	10A	10A	10A	X	0.3A	3A
REGULATION LOAD		±5%	±5%	±5%	X	±10%	±5%
RIPPLE AND NOISE		50mV	120mV	50mV	X	120mV	50mV

REMARKS：
+5V AND +3.3V MAX. POWER：80W

SPECIFICATION：

TEMPERATURE RANGE：OPERATING 0℃～ 50℃ · STORAGE -20℃～ 80℃

HOLD UP TIME：17mS MIN. AT FULL LOAD & 115 VAC INPUT VOLTAGE

EFFICIENCY：TYPICAL 86% AT 230V, FULL LOAD (PER SET)

POWER GOOD SIGNAL：ON DELAY 100mS TO 700mS · OFF DELAY 1mS

OUTPUT PROTECTION：OPP / OVP / SCP

FAULTY ALARM METHODS：LED, BUZZER, TTL SIGNAL

Leakage current：Input leakage current from line to ground will be less than 3.5mA rms. Measurement

will be made at 240 VAC and 60Hz.

DIMENSION：215mm(D) x 106mm(W) x 41.5mm(H)

THE POWER-SUPPLY IS FOR CHASSIS-ASSEMBLY ONLY AND IS NOT ALLOWED TO BE OPERATED AS STAND-ALONE COMPONENT. FINAL ASSEMBLY HAS TO COMPLY WITH CORRESPONDING EMC- AND SAFETY-REGULATIONS.

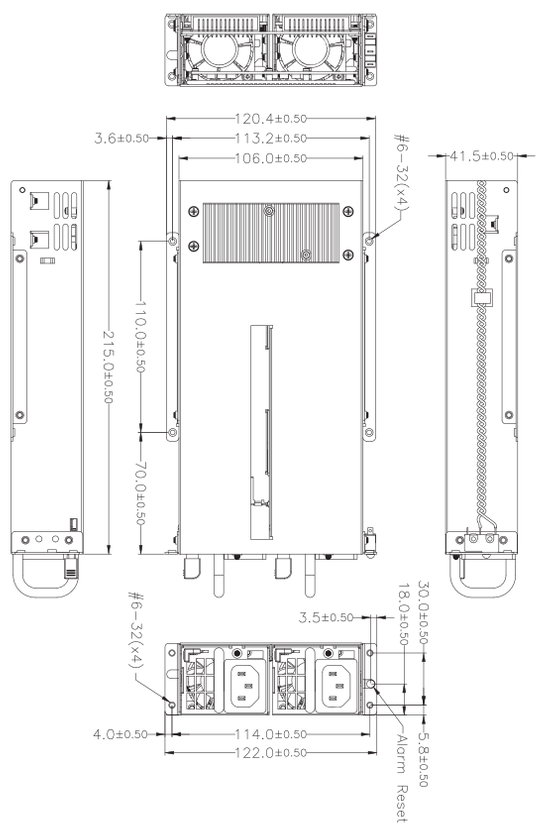

INPUT CHARACTERISTICS

VOLTAGE：

90~264 VAC FULL RANGE

FREQUENCY：

47 ～ 63HZ

INPUT CURRENT：

2/1 AMPS MAXIMUM AT ANY LOW/HIGH RANGE INPUT VOLTAGE

INRUSH CURRENT：

35/70 AMPS @115/230VAC

POWER FACTOR CORRECTION：

PFC CAN REACH THE TARGET OF 95% @ 115V, FULL LOAD, FOLLOWING THE STANDARD OF IEC 61000-3-2

EMI：

IEC61000-3-2, FCC, CISPR 22(EN 55022)

EMS：

EN 61000-4-2 ESD, EN61000-4-4 EFT, EN61000-4-5 SURGE

SAFETY：

TO MEET UL&CUL, TUV, CCC

E143756

R1T2-5120VFH

OUTPUT CHARACTERISTICS

MODEL	WATTAGE	OUTPUT					
		+5V	+12V	+3.3V	-5V	-12V	+5VSB
R1T2-5120VFH	120W	10A	10A	10A	X	0.3A	3A
REGULATION LOAD		±5%	±5%	±5%	X	±10%	±5%
RIPPLE AND NOISE		50mV	120mV	50mV	X	120mV	50mV

REMARKS：
+5V AND +3.3V MAX. POWER：80W. TOTAL POWER:120W (MAX)

SPECIFICATION：

TEMPERATURE RANGE：OPERATING 0℃～ 50℃ · STORAGE -20℃～ 80℃

HOLD UP TIME：17mS MIN. AT FULL LOAD & 115 VAC INPUT VOLTAGE

EFFICIENCY：THE MAXIMUM POWER SUPPLY SYSTEM EFFICIENCY SHALL BE 86%, MEASURED AT NOMINAL input voltage 230 V and full loading(+12V:10A).

POWER GOOD SIGNAL：ON DELAY 100mS TO 700mS · OFF DELAY 1mS

OUTPUT PROTECTION：OPP / OVP / SCP

REMOTE ON/OFF CONTROL

LEAKAGE CURRENT：INPUT LEAKAGE CURRENT FROM LINE TO GROUND WILL BE LESS THAN 3.5MA RMS. MEASUREMENT WILL BE MADE AT 240 VAC AND 60HZ.

FAULTY ALARM METHODS：LED, BUZZER, TTL SIGNAL

DIMENSION：215mm (D) x 106mm (W) x 41.5mm (H)

THE POWER-SUPPLY IS FOR CHASSIS-ASSEMBLY ONLY AND IS NOT ALLOWED TO BE OPERATED AS STAND-ALONE COMPONENT. FINAL ASSEMBLY HAS TO COMPLY WITH CORRESPONDING EMC- AND SAFETY-REGULATIONS.

INPUT CHARACTERISTICS

VOLTAGE：

90~264 VAC FULL RANGE

FREQUENCY：

47 ～ 63HZ

STEADY-STATE CURRENT：

2/1 AMPS MAXIMUM AT ANY LOW/HIGH RANGE INPUT VOLTAGE

INRUSH CURRENT：

35/70 AMPS @115/230VAC

POWER FACTOR CORRECTION：

PFC CAN REACH THE TARGET OF 95% @ 115V, FULL LOAD, FOLLOWING THE STANDARD OF IEC 61000-3-2

EMI：

IEC61000-3-2, FCC, CISPR 22(EN 55022)

EMS：

EN 61000-4-2 ESD, EN61000-4-4 EFT, EN61000-4-5 SURGE

SAFETY：

TO MEET UL&CUL, TUV, CCC

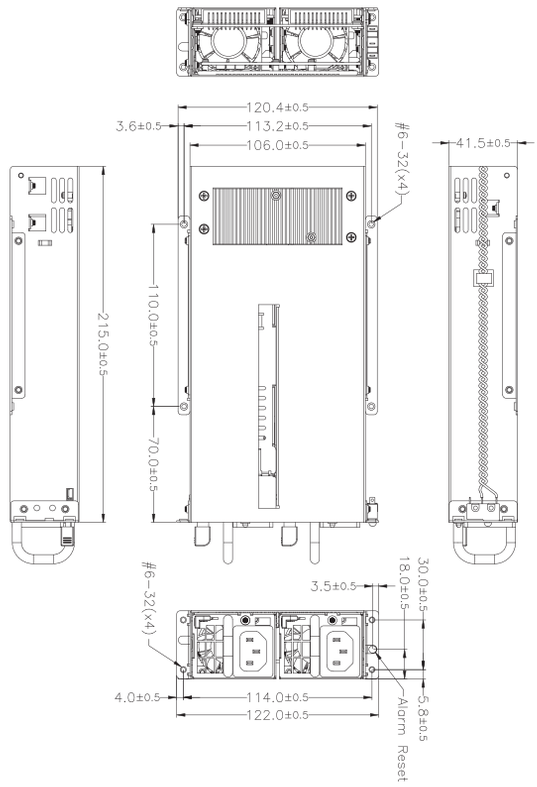

E143756

OUTPUT CHARACTERISTICS

MODEL	WATTAGE	OUTPUT					
		+5V	+12V	+3.3V	-5V	-12V	+5VSB
R1U2-5220V4H	220W	16A	17.5A	16A	X	0.3A	2A
REGULATION LOAD		±5%	±5%	±5%	X	±5%	±5%
RIPPLE AND NOISE		50mV	120mV	50mV	X	120mV	50mV

REMARKS：
POWER MODULE TOTAL OUTPUT POWER OF +5V AND +3.3V NOT EXCEED 120W

R1U2-5220V4H

SPECIFICATION：

TEMPERATURE RANGE：OPERATING 0℃～ 50℃ · STORAGE -20℃～ 80℃

HOLD UP TIME：20mS MIN. AT FULL LOAD & 115 VAC INPUT VOLTAGE

EFFICIENCY：TYPICAL 78% ±2 TYPICAL @230VAC FULL LOAD

POWER GOOD SIGNAL：ON DELAY 100mS TO 600mS

OUTPUT PROTECTION：OPP / OVP / SCP

FAULTY ALARM METHODS：LED, BUZZER, TTL SIGNAL

DIMENSION：260mm (D) x 106mm (W) x 41.3mm (H)

THE POWER-SUPPLY IS FOR CHASSIS-ASSEMBLY ONLY AND IS NOT ALLOWED TO BE OPERATED AS STAND-ALONE COMPONENT. FINAL ASSEMBLY HAS TO COMPLY WITH CORRESPONDING EMC- AND SAFETY-REGULATIONS.

INPUT CHARACTERISTICS

VOLTAGE：

90~264 VAC FULL RANGE

FREQUENCY：

47 ～ 63HZ

INPUT CURRENT：

2A（RMS）FOR 230VAC, 4A（RMS）FOR 115VAC

INRUSH CURRENT：

35/70 AMPS @ 115/230V

POWER FACTOR CORRECTION：

PFC CAN REACH THE TARGET OF 95% @ 115V, FULL LOAD, FOLLOWING THE STANDARD OF IEC 61000-3-2

EMI：

IEC61000-3-2, FCC, CISPR 22(EN 55022)

EMS：

EN 61000-4-2 ESD, EN61000-4-4 EFT, EN61000-4-5 SURGE

SAFETY：

TO MEET UL, CUL, TUV

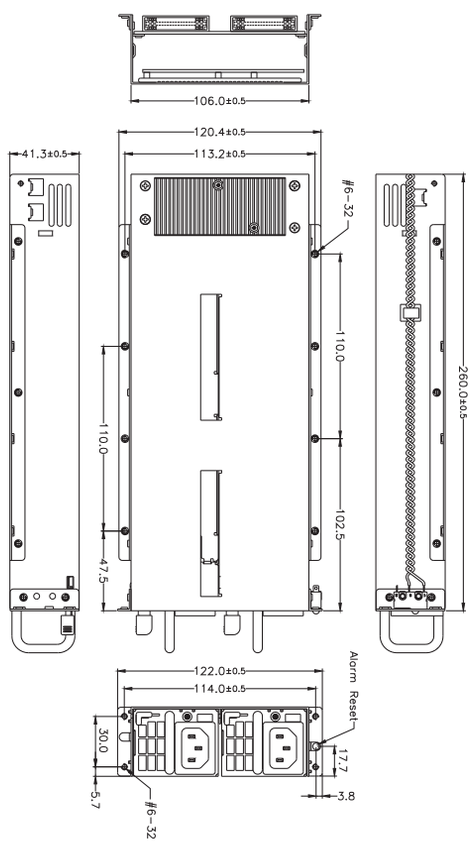

E143756

R1V2-5275V4H

OUTPUT CHARACTERISTICS

MODEL	WATTAGE	OUTPUT					
		+5V	+12V	+3.3V	-5V	-12V	+5VSB
R1V2-5275V4H	275W	20A	22A	20A	X	0.3A	2.5A
REGULATION LOAD		±5%	±5%	±5%	X	±10%	±5%
RIPPLE AND NOISE		50mV	120mV	50mV	X	120mV	50mV

REMARKS：
+5V AND +3.3V TOTAL OUTPUT MAX：150W
+5V, +3.3V, +12V, -12V TOTAL OUTPUT MAX：263W
TOTAL POWER：275W

SPECIFICATION：

TEMPERATURE RANGE：OPERATING 0℃～ 50℃ · STORAGE -20℃～ 80℃

HOLD UP TIME：16mS MIN. AT FULL LOAD & 115 VAC INPUT VOLTAGE

EFFICIENCY：TYPICAL 84% AT 230V, FULL LOAD (PER SET)

POWER GOOD SIGNAL：ON DELAY 100mS TO 600mS

OUTPUT PROTECTION：OPP / OVP / SCP

FAULTY ALARM METHODS：LED, BUZZER, TTL SIGNAL

DIMENSION：295mm (D) x 106mm (W) x 41.3mm (H)

THE POWER-SUPPLY IS FOR CHASSIS-ASSEMBLY ONLY AND IS NOT ALLOWED TO BE OPERATED AS STAND-ALONE COMPONENT. FINAL ASSEMBLY HAS TO COMPLY WITH CORRESPONDING EMC- AND SAFETY-REGULATIONS.

INPUT CHARACTERISTICS

VOLTAGE：

90~264 VAC FULL RANGE

FREQUENCY：

47 ～ 63HZ

INPUT CURRENT：

2A（RMS）FOR 230VAC, 4A（RMS）FOR 115VAC

INRUSH CURRENT：

15/30 AMPS AT 115/230 VAC

POWER FACTOR CORRECTION：

PFC CAN REACH THE TARGET OF 95% AT 115V AND 90% AT 230V, FULL LOAD

EMI：

IEC61000-3-2, FCC, CISPR 22(EN 55022)

EMS：

EN 61000-4-2 ESD, EN61000-4-4 EFT, EN61000-4-5 SURGE

SAFETY：

TO MEET UL, CUL, TUV, CCC

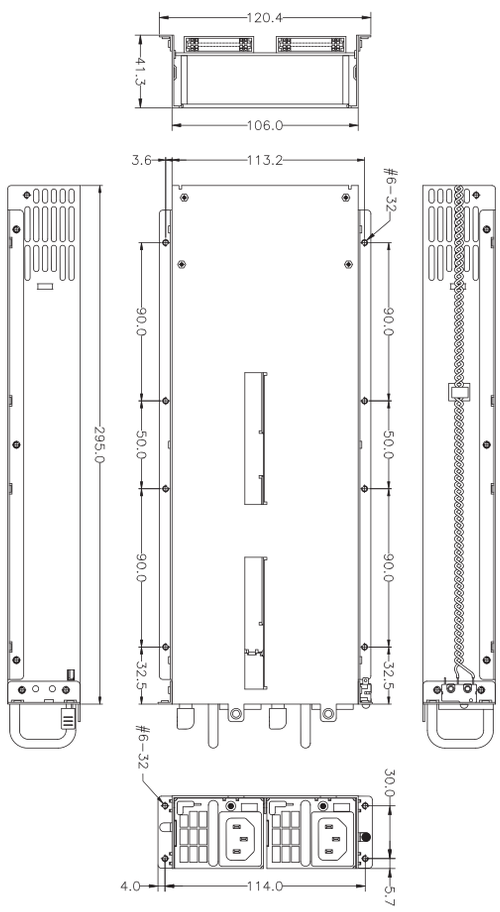

E143756

M1Y2-5300G2H
M1Y2-5300K2H

OUTPUT CHARACTERISTICS

MODEL	WATTAGE	OUTPUT					
		+5V	+12V	+3.3V	-5V	-12V	+5VSB
M1Y2-5300G2H	300W	18A	24A	18A	X	0.3A	3A
M1Y2-5300K2H	300W	18A	24A	18A	X	0.3A	3A
REGULATION LOAD		±5%	±5%	±5%	X	±10%	±5%
RIPPLE AND NOISE		50mV	120mV	50mV	X	120mV	50mV

REMARKS：
+5V AND +3.3V MAX. POWER:120W; TOTAL POWER:300W (MAX)

SPECIFICATION：

TEMPERATURE RANGE：OPERATING 0℃ ~ 50℃ , STORAGE -20℃ ~80℃

HOLD UP TIME：WHEN POWER SHUTDOWN DC OUTPUT 5V MUST BE MAINTAIN 20MSEC IN REGULATION LIMIT AT NORMAL INPUT VOLTAGE

EFFICIENCY：THE MAXMUM POWER SUPPLY SYSTEM EFFICIENCY SHALL BE ≥ 86%, MEASURED AT NOMINAL INPUT VOLTAGE 115 V OR 230 V AND FULL LOADING.

LEAKAGE CURRENT：INPUT LEAKAGE CURRENT FROM LINE TO GROUND WILL BE LESS THAN 3.5MA RMS. MEASUREMENT WILL BE MADE AT 240 VAC AND 60HZ.

POWER GOOD SIGNAL：ON DELAY 100mS TO 500mS · OFF DELAY 1mS

OUTPUT PROTECTION：OPP / OVP / OCP / SCP

REMOTE ON/OFF CONTROL

WARNING METHOD：AUDIO ALARM (BUZZER SOUND, RESETABLE), FALUT LED, TTL

DIMENSION：275(D) × 106(W) × 41.3(H) mm

THE POWER-SUPPLY IS FOR CHASSIS-ASSEMBLY ONLY AND IS NOT ALLOWED TO BE OPERATED AS STAND-ALONE COMPONENT. FINAL ASSEMBLY HAS TO COMPLY WITH CORRESPONDING EMC- AND SAFETY-REGULATIONS.

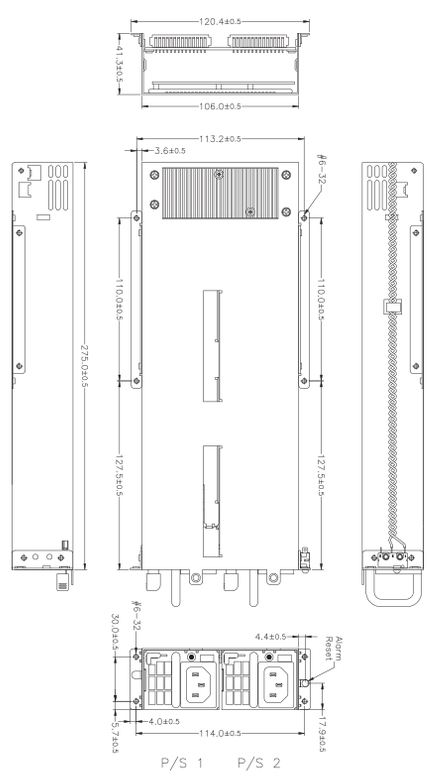

INPUT CHARACTERISTICS

VOLTAGE：

90~264 VAC FULL RANGE

FREQUENCY：

47 ~ 63HZ

INPUT CURRENT：

5/2.5A AT ANY LOW/HIGH RANGE INPUT VOLTAGE

INRUSH CURRENT：

15/30A @115/230VAC

POWER FACTOR CORRECTION：

PFC CAN REACH THE TARGET OF 95% @ 115V, FULL LOAD, FOLLOWING THE STANDARD OF IEC 1000-3-2

EMI：

IEC61000-3-2, FCC, CISPR 22(EN 55022)

EMS：

EN 61000-4-2 ESD, EN6100-4-4 EFT, EN61000-4-5 SURGE

SAFETY：

TO MEET UL, CUL, TUV, CCC

E143756

M1R2-5300V0H
M1R2-5400V0H

OUTPUT CHARACTERISTICS

MODEL	WATTAGE	OUTPUT					
		+5V	+12V	+3.3V	-5V	-12V	+5VSB
M1R2-5300V0H	300W	22A	25A	22A	X	0.5A	3A
M1R2-5400V0H	400W	22A	33A	22A	X	0.5A	3A
REGULATION LOAD		±5%	±5%	±5%	X	±5%	±5%
RIPPLE AND NOISE		50mV	120mV	120mV	X	120mV	120mV

REMARKS：
+5V AND +3.3V NOT EXCEED 150W; TOTAL POWER NOT EXCEED 400W(M1R2-5400V0H)
+5V AND +3.3V NOT EXCEED 150W; TOTAL POWER NOT EXCEED 300W(M1R2-5300V0H)

SPECIFICATION：

TEMPERATURE RANGE：OPERATING 0℃～ 50℃ , STORAGE -20℃ ~80℃

HOLD UP TIME：WHEN POWER SHUTDOWN DC OUTPUT 5V MUST BE MAINTAIN 11MSEC IN REGULATION LIMIT AT NORMAL INPUT VOLTAGE

EFFICIENCY：88% TYPICAL · AT FULL LOAD 230VAC

LEAKAGE CURRENT：3.5 mA. MAX. AT NOMINAL VOLTAGE 250VAC

OUTPUT PROTECTION：OPP / OVP / SCP / OCP

WARNING METHOD：AUDIO ALARM (BUZZER SOUND, RESETABLE), FALUT LED, TTL

DIMENSION：295mm (D) × 106mm (W) × 41.3mm (H)

THE POWER-SUPPLY IS FOR CHASSIS-ASSEMBLY ONLY AND IS NOT ALLOWED TO BE OPERATED AS STAND-ALONE COMPONENT. FINAL ASSEMBLY HAS TO COMPLY WITH CORRESPONDING EMC- AND SAFETY-REGULATIONS.

INPUT CHARACTERISTICS

VOLTAGE：

90~264 VAC FULL RANGE

FREQUENCY：

47 ～ 63HZ

INPUT CURRENT：

7A/3A(400W) 6A/3A(300W) AT ANY LOW/HIGH RANGE INPUT VOLTAGE

INRUSH CURRENT：

15/30A @115/230VAC

POWER FACTOR CORRECTION：

PFC CAN REACH THE TARGET OF 95% @ 115V, FULL LOAD, FOLLOWING THE STANDARD OF IEC 1000-3-2

EMI：

IEC61000-3-2, FCC, CISPR 22(EN 55022)

EMS：

EN 61000-4-2 ESD, EN6100-4-4 EFT, EN61000-4-5 SURGE

SAFETY：

TO MEET UL, CUL, TUV, CCC

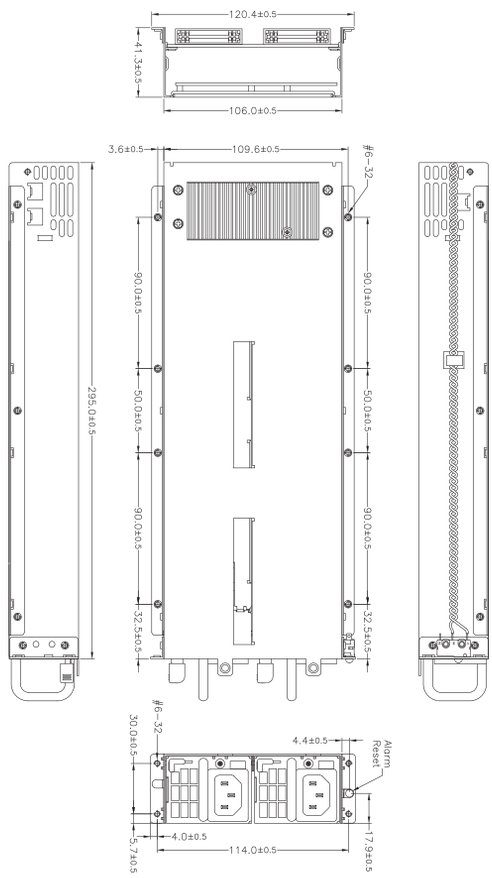

E143756

Micro Redundant

PMBus Optional

80 PLUS GOLD

M1R2-5500G0H

OUTPUT CHARACTERISTICS

MODEL	WATTAGE	OUTPUT					
		+5V	+12V	+3.3V	-5V	-12V	+5VSB
M1R2-5500G0H	500W	22A	41A	22A	X	0.5A	3A
REGULATION LOAD		±5%	±5%	±5%	X	±5%	±5%
RIPPLE AND NOISE		50mV	120mV	50mV	X	120mV	50mV

REMARKS：
+5V AND +3.3V NOT EXCEED 150W; TOTAL POWER NOT EXCEED 500W

SPECIFICATION：

TEMPERATURE RANGE：OPERATING 0℃～ 50℃ , STORAGE -20℃ ~80℃

HOLD UP TIME：WHEN POWER SHUTDOWN DC OUTPUT 5V MUST BE MAINTAIN 9MSEC IN REGULATION LIMIT AT NORMAL INPUT VOLTAGE

EFFICIENCY：88% TYPICAL · AT FULL LOAD 230VAC

LEAKAGE CURRENT：3.5 mA. MAX. AT NOMINAL VOLTAGE 240VAC

POWER GOOD SIGNAL：ON DELAY 100mS TO 500mS

OUTPUT PROTECTION：OPP / OVP / OCP / SCP

WARNING METHOD：AUDIO ALARM (BUZZER SOUND, RESETABLE), FALUT LED, TTL

DIMENSION：295mm (D) × 106mm (W) × 41.3mm (H)

THE POWER-SUPPLY IS FOR CHASSIS-ASSEMBLY ONLY AND IS NOT ALLOWED TO BE OPERATED AS STAND-ALONE COMPONENT. FINAL ASSEMBLY HAS TO COMPLY WITH CORRESPONDING EMC- AND SAFETY-REGULATIONS.

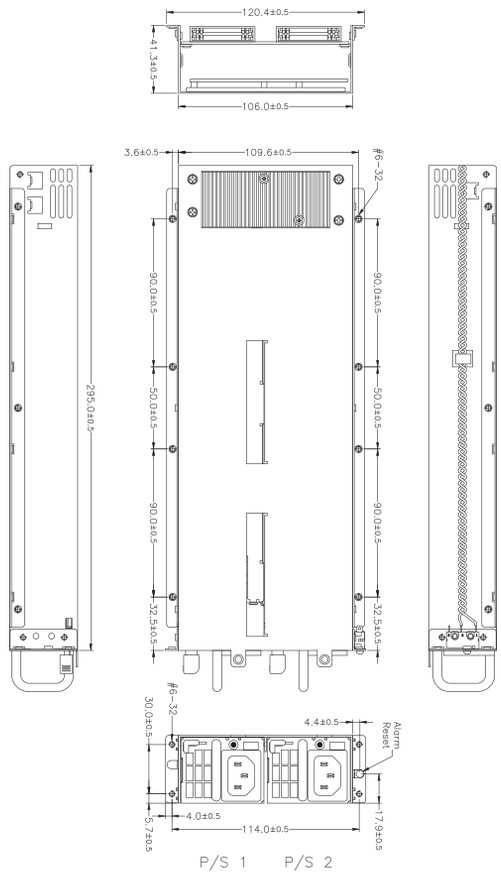

INPUT CHARACTERISTICS

VOLTAGE：

90~264 VAC FULL RANGE

FREQUENCY：

47 ～ 63HZ

INPUT CURRENT：

8/4A AT ANY LOW/HIGH RANGE INPUT VOLTAGE

INRUSH CURRENT：

15/30A @115/230VAC

POWER FACTOR CORRECTION：

PFC CAN REACH THE TARGET OF 95% @ 115V, FULL LOAD, FOLLOWING THE STANDARD OF IEC 1000-3-2

EMI：

IEC61000-3-2, FCC, CISPR 22(EN 55022)

EMS：

EN 61000-4-2 ESD, EN6100-4-4 EFT, EN61000-4-5 SURGE

SAFETY：

TO MEET UL, CUL, TUV, CCC

E143756

M1S2-5600G2H

OUTPUT CHARACTERISTICS

MODEL	WATTAGE	OUTPUT					
		+5V	+12V	+3.3V	-5V	-12V	+5VSB
M1S2-5600G2H	600W	25A	50A	25A	X	0.8A	3.5A
REGULATION LOAD		±5%	±5%	±5%	X	±5%	±5%
RIPPLE AND NOISE		50mV	120mV	50mV	X	120mV	50mV

REMARKS：
TOTAL MAX OUTPUT OF +5V AND +3.3V NOT EXCEED 170W, TOTAL POWER 600W

INPUT CHARACTERISTICS

VOLTAGE：

90~264 VAC FULL RANGE

FREQUENCY：

47 ~ 63HZ

INPUT CURRENT：

8.5/4.5A AT ANY LOW/HIGH RANGE INPUT VOLTAGE

INRUSH CURRENT：

35/65 AMPS @ 132/264VAC PER POWER MODULE

POWER FACTOR CORRECTION：

PFC CAN REACH THE TARGET OF 95% @ 115V, FULL LOAD, FOLLOWING THE STANDARD OF IEC 61000-3-2

EMI：

IEC61000-3-2, FCC, CISPR 22(EN 55022)

EMS：

EN 61000-4-2 ESD, EN6100-4-4 EFT, EN61000-4-5 SURGE

SAFETY：

TO MEET UL&CUL, TUV, CCC

SPECIFICATION：

TEMPERATURE RANGE：OPERATING 0℃ ~ 40℃ · STORAGE -20℃ ~ 80℃

HOLD UP TIME：16mS MIN. TESTED AT 90% MAXIMUM LOAD AND OVER 100~240VAC INPUT

EFFICIENCY：TYPICAL 86% AT 25℃ 230VAC FULL LOAD

POWER GOOD SIGNAL：ON DELAY 100mS TO 500mS · OFF DELAY 1mS

OUTPUT PROTECTION：OPP / OVP / OCP / SCP

FAULTY ALARM METHODS：LED, BUZZER, TTL SIGNAL

HOT-SWAPPABLE/HOT PLUGGABLE REDUNDANCY FUNCTION

ISOLATION：BUILT-IN THE POWER MODULE

REMOTE SENSING DESIGN

LEAKAGE CURRENT：INPUT LEAKAGE CURRENT FROM LINE TO GROUND WILL BE LESS THAN 3.5MA RMS. MEASUREMENT WILL BE MADE AT 240 VAC AND 60HZ.

DIMENSION：355mm (D) x 106mm (W) x 41.3mm (H)

THE POWER-SUPPLY IS FOR CHASSIS-ASSEMBLY ONLY AND IS NOT ALLOWED TO BE OPERATED AS STAND-ALONE COMPONENT. FINAL ASSEMBLY HAS TO COMPLY WITH CORRESPONDING EMC- AND SAFETY-REGULATIONS.

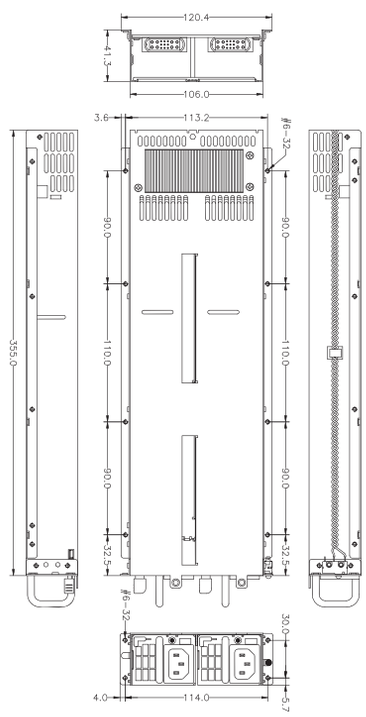

M1V2-5800V4H
M1V2-5801V4H

OUTPUT CHARACTERISTICS

MODEL	WATTAGE	OUTPUT					
		+5V	+12V	+3.3V	-5V	-12V	+5VSB
M1V2-5800V4H	800W	22A	66A	22A	X	0.5A	3A
M1V2-5801V4H	800W	35A	66A	31A	X	0.5A	3A
REGULATION LOAD		±5%	±5%	±5%	X	±5%	±5%
RIPPLE AND NOISE		50mV	120mV	50mV	X	120mV	50mV

REMARKS：
POWER MODULE TOTAL OUTPUT POWER OF +5V AND +3.3V NOT EXCEED 150W (MIV2-5800V4H); +5V AND +3.3V NOT EXCEED 210W(MIV2-5801V4H)

SPECIFICATION：

TEMPERATURE RANGE：OPERATING 0℃ ~50℃ · STORAGE -20℃ ~80℃

HOLD UP TIME：11mS MIN. AT FULL LOAD & 90 VAC INPUT VOLTAGE

EFFICIENCY：TYPICAL 85% AT 115V, TYPICAL 88% AT 230V, FULL LOAD (PER SET)

POWER GOOD SIGNAL：ON DELAY 100mS TO 500mS

OUTPUT PROTECTION： OPP / OVP / SCP

WARNING METHOD： LED, BUZZER, TTL SIGNAL

HOT-SWAPPABLE/HOT PLUGGABLE REDUNDANCY FUNCTION

DIMENSION：355mm (D) x 106mm (W) x 41.3mm (H)

THE POWER-SUPPLY IS FOR CHASSIS-ASSEMBLY ONLY AND IS NOT ALLOWED TO BE OPERATED AS STAND-ALONE COMPONENT. FINAL ASSEMBLY HAS TO COMPLY WITH CORRESPONDING EMC- AND SAFETY-REGULATIONS.

INPUT CHARACTERISTICS

VOLTAGE：

90~264 VAC FULL RANGE

FREQUENCY：

47 ~ 63HZ

INPUT CURRENT：

6A（RMS）FOR 230VAC, 12A（RMS）FOR 115VAC

INRUSH CURRENT：

15A MAX. FOR 115 VAC PER MODULE, 30A MAX. FOR 230 VAC PER MODULE

POWER FACTOR CORRECTION：

PFC CAN REACH THE TARGET OF 98% AT 110VAC, FULL LOAD

EMI：

IEC61000-3-2, FCC, CISPR 22(EN 55022)

EMS：

EN 61000-4-2 ESD, EN61000-4-4 EFT, EN61000-4-5 SURGE

SAFETY：

TO MEET UL, CUL, TUV

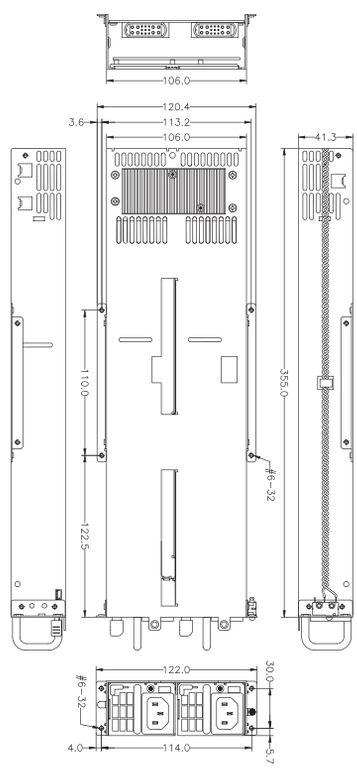

E143756

Micro Redundant

PMBus Optional

80 PLUS SILVER

M1U2-5650V4H
M1U2-5750V4H
M1U2-5651V4H
M1U2-5751V4H

INPUT CHARACTERISTICS

VOLTAGE :

90~264 VAC FULL RANGE

FREQUENCY :

47 ~ 63HZ

INPUT CURRENT :

WATTAGE	115V	230V
650W	10A	5A
750W	12A	6A

INRUSH CURRENT :

15/30A @ 115V/230VAC

POWER FACTOR CORRECTION :

PFC CAN REACH THE TARGET OF 98% AT 110VAC, FULL LOAD

EMI :

IEC61000-3-2, FCC, CISPR 22(EN 55022)

EMS :

EN 61000-4-2 ESD, EN61000-4-4 EFT, EN61000-4-5 SURGE

SAFETY :

TO MEET UL&CUL, TUV, CCC

E143756

OUTPUT CHARACTERISTICS

MODEL	WATTAGE	OUTPUT					
		+5V	+12V	+3.3V	-5V	-12V	+5VSB
M1U2-5650V4H	650W	22A	54A	22A	X	0.5A	3A
M1U2-5750V4H	750W	22A	62A	22A	X	0.5A	3A
M1U2-5651V4H	650W	35A	54A	31A	X	0.5A	3A
M1U2-5751V4H	750W	35A	62A	31A	X	0.5A	3A
REGULATION LOAD		±5%	±5%	±5%	X	±5%	±5%
RIPPLE AND NOISE		50mV	120mV	50mV	X	120mV	50mV

REMARKS :
+5V AND +3.3V NOT EXCEED 150W : M1U2-5650V4H / M1U2-5750V4H
+5V AND +3.3V NOT EXCEED 210W : M1U2-5651V4H / M1U2-5751V4H

SPECIFICATION :

TEMPERATURE RANGE : OPERATING 0°C ~50°C · STORAGE -20°C ~80°C

HOLD UP TIME : 11mS MIN. AT FULL LOAD & 90 VAC INPUT VOLTAGE

EFFICIENCY : TYPICAL 85% AT 115V, 88% AT 230V, FULL LOAD (PER SET)

POWER GOOD SIGNAL : ON DELAY 100mS TO 500mS

OUTPUT PROTECTION : OPP / OVP / SCP

WARNING METHOD : LED, BUZZER, TTL SIGNAL

HOT-SWAPPABLE/HOT PLUGGABLE REDUNDANCY FUNCTION

DIMENSION : 355mm (D) x 106mm (W) x 41.3mm (H)

THE POWER-SUPPLY IS FOR CHASSIS-ASSEMBLY ONLY AND IS NOT ALLOWED TO BE OPERATED AS STAND-ALONE COMPONENT. FINAL ASSEMBLY HAS TO COMPLY WITH CORRESPONDING EMC- AND SAFETY-REGULATIONS.

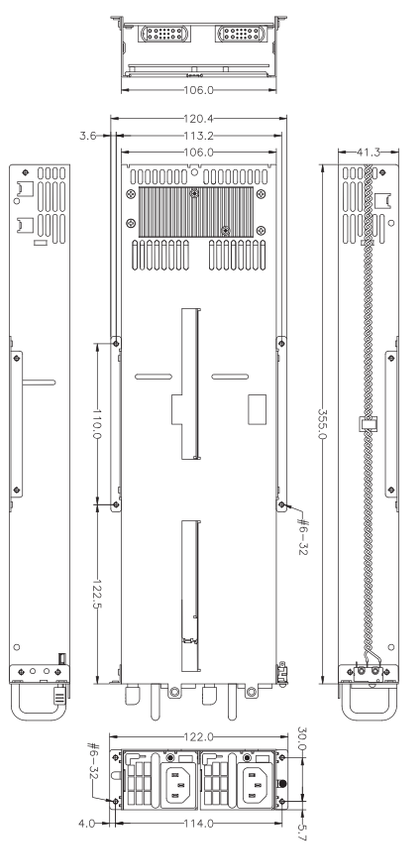

Micro Redundant PMBus Optional

M1K2-5A00V4H
M1K2-5C00V4H
M1K2-5A01V4H
M1K2-5C01V4H

INPUT CHARACTERISTICS

VOLTAGE：

90~264 VAC FULL RANGE

FREQUENCY：

47 ~ 63HZ

INPUT CURRENT：

15/7.5 AMPS MAXIMUM AT ANY LOW/HIGH RANGE INPUT VOLTAGE

INRUSH CURRENT：

15/30 AMPS @115/230VAC

POWER FACTOR CORRECTION：

PFC CAN REACH THE TARGET OF 95% AT 110V , FULL LOAD

EMI：

IEC61000-3-2, FCC, CISPR 22(EN 55022)

EMS：

EN 61000-4-2 ESD, EN61000-4-4 EFT, EN61000-4-5 SURGE

SAFETY：

TO MEET UL&CUL, TUV

E143756

OUTPUT CHARACTERISTICS

MODEL	WATTAGE	OUTPUT					
		+5V	+12V	+3.3V	-5V	-12V	+5VSB
M1K2-5A00V4H	1000W	22A	83A	22A	X	0.5A	3A
M1K2-5C00V4H	1200W	22A	100A	22A	X	0.5A	3A
M1K2-5A01V4H	1000W	36A	83A	31A	X	0.5A	3A
M1K2-5C01V4H	1200W	36A	100A	31A	X	0.5A	3A
REGULATION LOAD		±5%	±5%	±5%	X	±5%	±5%
RIPPLE AND NOISE		50mV	120mV	50mV	X	120mV	50mV

REMARKS：
POWER MODULE TOTAL OUTPUT POWER OF +5V AND +3.3V NOT EXCEED 150W (M1K2-5A00V4H / M1K25C00V4H) 210W (M1K2-5A01V4H / M1K2-5C01V4H)

SPECIFICATION：

TEMPERATURE RANGE：OPERATING 0℃ ~50℃ · STORAGE -20℃ ~80℃

HOLD UP TIME：10mS MIN. AT FULL LOAD & 115 VAC INPUT VOLTAGE

EFFICIENCY：TYPICAL 83% AT 115V, TYPICAL 86% AT 230V, FULL LOAD (PER SET)

POWER GOOD SIGNAL：ON DELAY 100mS TO 500mS

OUTPUT PROTECTION： OPP / OVP / SCP

WARNING METHOD： LED, BUZZER, TTL SIGNAL

HOT-SWAPPABLE/HOT PLUGGABLE REDUNDANCY FUNCTION

DIMENSION：400mm (D) x 106mm (W) x 41.3mm (H)

THE POWER-SUPPLY IS FOR CHASSIS-ASSEMBLY ONLY AND IS NOT ALLOWED TO BE OPERATED AS STAND-ALONE COMPONENT. FINAL ASSEMBLY HAS TO COMPLY WITH CORRESPONDING EMC- AND SAFETY-REGULATIONS.

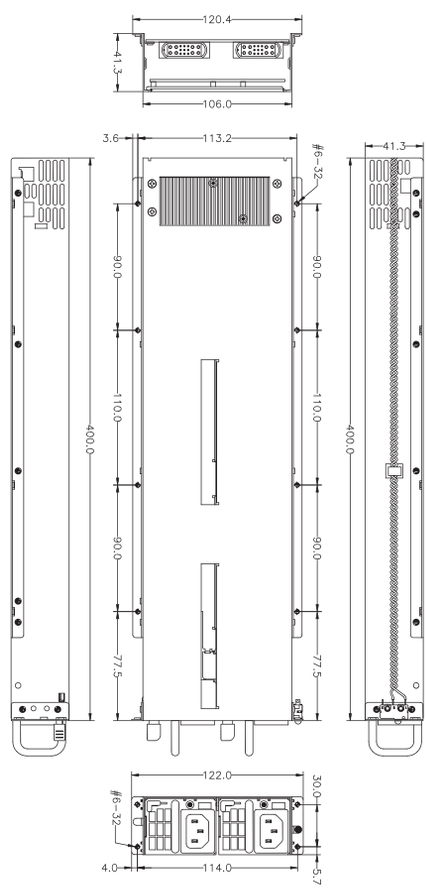

MICRO REDUNDANT

M1P2-5300V4H
M1P2-5420V4H
M1P2-5500V4H

OUTPUT CHARACTERISTICS

MODEL	WATTAGE	OUTPUT					
		+5V	+12V	+3.3V	-5V	-12V	+5VSB
M1P2-5300V4H	300W	20A	25A	20A	X	0.5A	3.5A
M1P2-5420V4H	420W	32A	35A	25A	X	0.5A	3.5A
M1P2-5500V4H	500W	32A	41A	25A	X	0.5A	3.5A
REGULATION LOAD		±5%	±5%	±5%	X	±10%	±5%
RIPPLE AND NOISE		50mV	120mV	50mV	X	120mV	50mV

REMARKS：
+5V AND 3.5V TOTAL MAX 140W/170W/170W

SPECIFICATION：

TEMPERATURE RANGE：OPERATING：0°C ~ 40°C , STORAGE：-20°C ~ 80°C

HOLD UP TIME：16 ms MINIMUM AT FULL LOAD IN REGULATION LIMIT AT 90 VAC INPUT VOLTAGE

EFFICIENCY：>80% TYPICAL AT 230 VAC FULL LOAD

POWER GOOD SIGNAL：ON DELAY 100 ms TO 500 ms, OFF DELAY 1 ms

OUTPUT PROTECTION：OPP / OVP / OCP / SCP

REMOTE ON/OFF CONTROL

FAULTY ALARM METHODS：LED, BUZZER, TTL SIGNAL

HOT-SWAPPABLE/HOT PLUGGABLE REDUNDANCY FUNCTION

ISOLATION：BUILT-IN THE POWER MODULE

REMOTE SENSING DESIGN

DIMENSION：230mm (D) x 176mm (W) x 41.8mm (H)

THE POWER-SUPPLY IS FOR CHASSIS-ASSEMBLY ONLY AND IS NOT ALLOWED TO BE OPERATED AS STAND-ALONE COMPONENT. FINAL ASSEMBLY HAS TO COMPLY WITH CORRESPONDING EMC- AND SAFETY-REGULATIONS.

INPUT CHARACTERISTICS

VOLTAGE：

90~264 VAC FULL RANGE

FREQUENCY：

47 ~ 63HZ

INPUT CURRENT：

5 / 3 AMPS MAXIMUM AT ANY LOW/HIGH RANGE INPUT VOLTAGE (300W)

7 / 3 AMPS MAXIMUM AT ANY LOW/HIGH RANGE INPUT VOLTAGE (420W)

8 / 4 AMPS MAXIMUM AT ANY LOW/HIGH RANGE INPUT VOLTAGE (500W)

INRUSH CURRENT：

40/60A @ 115/230VAC (25°C)

POWER FACTOR CORRECTION：

PFC CAN REACH THE TARGET OF 95% @ 230V, FULL LOAD, FOLLOWING THE STANDARD OF IEC 1000-3-2

EMI：

IEC61000-3-2, FCC, CISPR 22(EN 55022)

EMS：

EN 61000-4-2 ESD, EN61000-4-4 EFT, EN61000-4-5 SURGE

SAFETY：

TO MEET UL, CUL, TUV, CCC

E143756

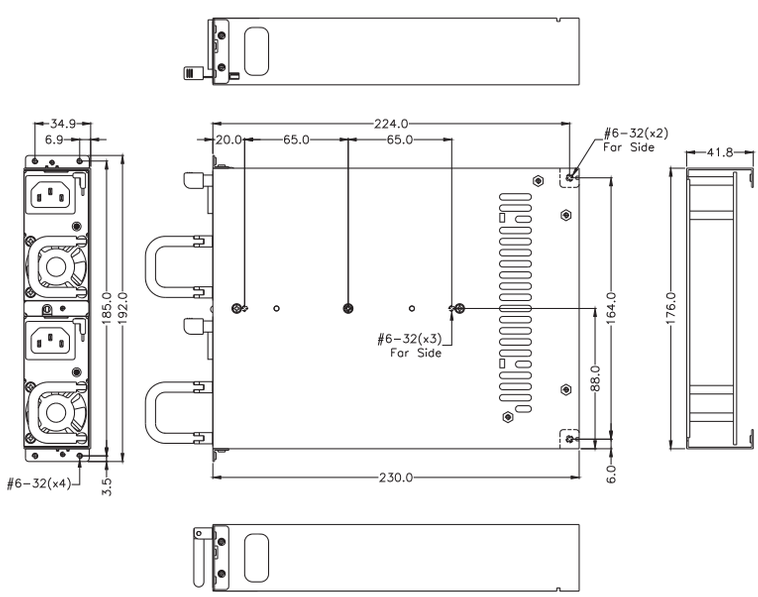

R1S2-5120V0H

OUTPUT CHARACTERISTICS

MODEL	WATTAGE	OUTPUT					
		+5V	+12V	+3.3V	-5V	-12V	+5VSB
R1S2-5120V0H	120W	10A	10A	10A	X	0.3A	3.0A
REGULATION LOAD		±5%	±5%	±5%	X	±5%	±5%
RIPPLE AND NOISE		50mV	120mV	50mV	X	120mV	50mV

REMARKS：
POWER MODULE TOTAL OUTPUT POWER OF +5V AND +3.3V NOT EXCEED 80W;
POWER MODULE TOTAL OUTPUT POWER NOT EXCEED 120W

SPECIFICATION：

TEMPERATURE RANGE：OPERATING 0℃～ 50℃ , STORAGE -20℃ ~80℃

HOLD UP TIME：WHEN POWER SHUTDOWN ALL DC OUTPUT MUST BE MAINTAIN 17MSEC IN REGULATION LIMIT AT NORMAL INPUT VOLTAGE

EFFICIENCY：TYPICAL 85% AT 230V, 50% OF FULL LOAD

LEAKAGE CURRENT：3.5 mA. MAX. AT NOMINAL VOLTAGE 250VAC

POWER GOOD SIGNAL：ON DELAY 100mS TO 700mS · OFF DELAY 1mS

OUTPUT PROTECTION：OPP / OVP / SCP

WARNING METHOD：AUDIO ALARM(BUZZER SOUND, RESETABLE), FALUT LED, TTL

DIMENSION：150mm (D) × 176mm (W) × 41.8mm (H)

THE POWER-SUPPLY IS FOR CHASSIS-ASSEMBLY ONLY AND IS NOT ALLOWED TO BE OPERATED AS STAND-ALONE COMPONENT. FINAL ASSEMBLY HAS TO COMPLY WITH CORRESPONDING EMC- AND SAFETY-REGULATIONS.

INPUT CHARACTERISTICS

VOLTAGE：

90~264 VAC FULL RANGE

FREQUENCY：

47 ～ 63HZ

INPUT CURRENT：

2/1 AMPS MAXIMUM AT ANY LOW/HIGH RANGE INPUT VOLTAGE

INRUSH CURRENT：

35/70 AMPS @115/230VAC

POWER FACTOR CORRECTION：

PFC CAN REACH THE TARGET OF 95% @ 110V, FULL LOAD, FOLLOWING THE STANDARD OF IEC 61000-3-2

EMI：

IEC61000-3-2, FCC, CISPR 22(EN 55022)

EMS：

EN 61000-4-2 ESD, EN61000-4-4 EFT, EN61000-4-5 SURGE

SAFETY：

TO MEET UL, CUL, TUV

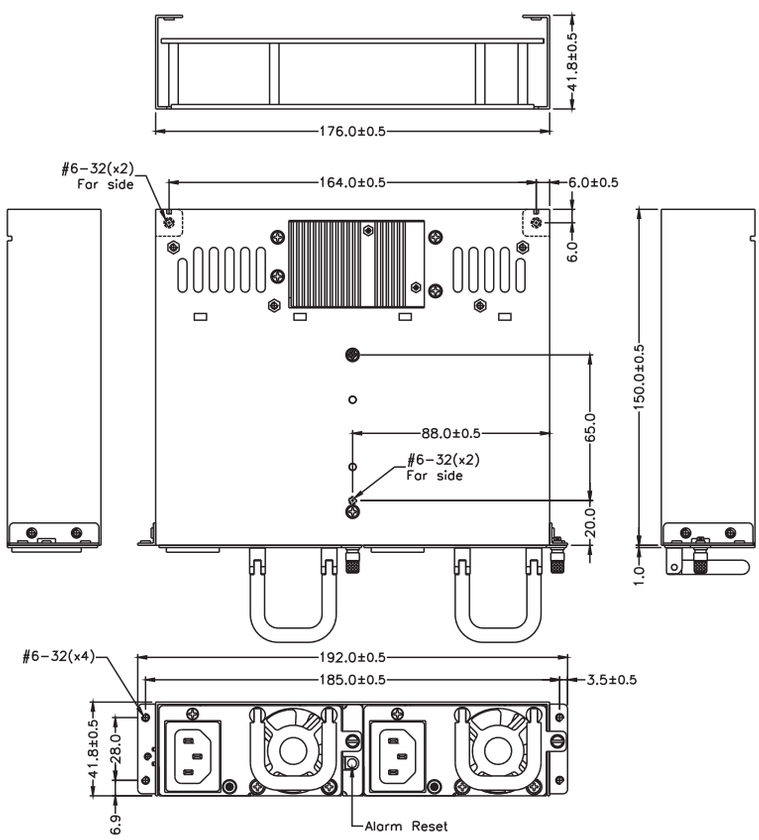

E143756

R1S2-5180V4H
R1S2-5300V4H
R1S2-5380V4H

INPUT CHARACTERISTICS

VOLTAGE：

90~264 VAC FULL RANGE

FREQUENCY：

47 ~ 63HZ

INPUT CURRENT：

WATTAGE	115V	230V
180W	3A	1.5A
300W	4.5	2A
380W	5.5A	2.5A

INRUSH CURRENT：

15/30 AMPS @115/230VAC

POWER FACTOR CORRECTION：

PFC CAN REACH THE TARGET OF 95% AT 115/230VAC, FULL LOAD

EMI：

IEC61000-3-2, FCC, CISPR 22(EN 55022)

EMS：

EN 61000-4-2 ESD, EN61000-4-4 EFT, EN61000-4-5 SURGE

SAFETY：

TO MEET UL&CUL, TUV

E143756

OUTPUT CHARACTERISTICS

MODEL	WATTAGE	OUTPUT					
		+5V	+12V	+3.3V	-5V	-12V	+5VSB
R1S2-5180V4H	180W	14A	14A	12A	X	0.3A	2.5A
R1S2-5300V4H	300W	20A	24A	20A	X	0.5A	2.5A
R1S2-5380V4H	380W	20A	30A	20A	X	0.5A	2.5A
REGULATION LOAD		±5%	±5%	±5%	X	±10%	±5%
RIPPLE AND NOISE		50mV	120mV	50mV	X	120mV	50mV

REMARKS：
+5V AND +3.3V TOTAL OUTPUT MAX：140W
R1S2-5180V4H：+5V AND +3.3V TOTAL 70W

SPECIFICATION：

TEMPERATURE RANGE：OPERATING 0℃ ~40℃ , STORAGE -20℃ ~80℃

HOLD UP TIME：WHEN POWER SHUTDOWN DC OUTPUT 5V MUST BE MAINTAIN 16ms IN REGULATION LIMIT AT NORMAL INPUT VOLTAGE

EFFICIENCY：78% ±2% TYPICAL AT FULL LOAD 230V (180W) , 84% TYPICAL · AT FULL LOAD 115VAC (300W,380W)

LEAKAGE CURRENT：3.5mA MAX. AT NOMINAL VOLTAGE 250VAC

POWER GOOD SIGNAL：ON DELAY 100mS TO 550mS · OFF DELAY 1Ms

OUTPUT PROTECTION： OPP / OVP / SCP

WARNING METHOD：AUDIO ALARM(BUZZER SOUND, RESETABLE), FAULT LED, TTL

HOT-SWAPPABLE/HOT PLUGGABLE REDUNDANCY FUNCTION

DIMENSION：230(D)×176(W)×41.8(H) mm

THE POWER-SUPPLY IS FOR CHASSIS-ASSEMBLY ONLY AND IS NOT ALLOWED TO BE OPERATED AS STAND-ALONE COMPONENT. FINAL ASSEMBLY HAS TO COMPLY WITH CORRESPONDING EMC- AND SAFETY-REGULATIONS.

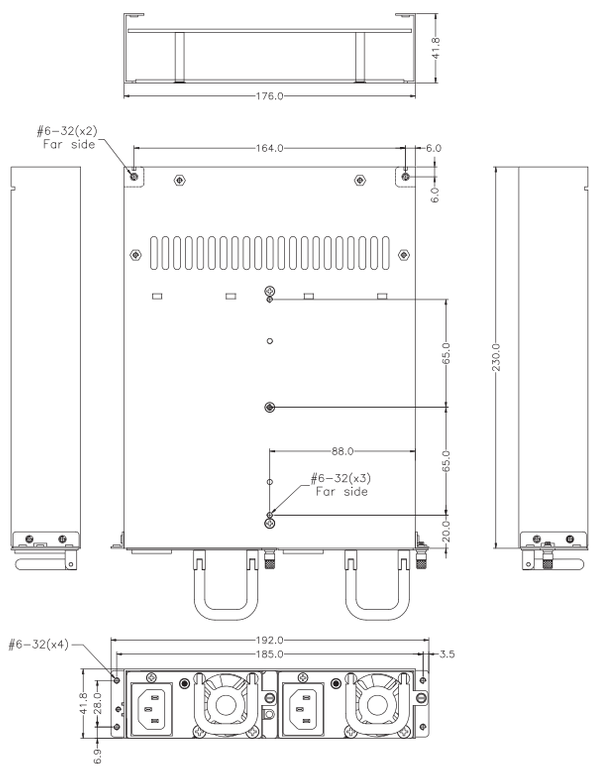

PMBus Optional

OUTPUT CHARACTERISTICS

MODEL	WATTAGE	OUTPUT					
		+5V	+12V	+3.3V	-5V	-12V	+5VSB
G1W2-5760V3H	760W	32A	62A	32A	X	0.8A	3.5A
REGULATION LOAD		±5%	±5%	±5%	X	±5%	±5%
RIPPLE AND NOISE		50mV	120mV	50mV	X	120mV	50mV

REMARKS：
+5V AND +3.3V TOTAL OUTPUT MAX：190W; TOTAL OUTPUT MAX：760W

G1W2-5760V3H

SPECIFICATION：

TEMPERATURE RANGE：OPERATING：0°C ~ 40°C , STORAGE：-20°C ~ 80°C

HOLD UP TIME：16 ms MINIMUM AT FULL LOAD & NORMAL INPUT VOLTAGE

EFFICIENCY：>80% TYPICAL AT 230 VAC FULL LOAD

POWER GOOD SIGNAL：ON DELAY 100 ms TO 500 ms, OFF DELAY 1 ms

OUTPUT PROTECTION：OPP / OVP / OCP / SCP

FAULTY ALARM METHODS：LED, BUZZER, TTL SIGNAL

HOT-SWAPPABLE/HOT PLUGGABLE REDUNDANCY FUNCTION

ISOLATION：BUILT-IN THE POWER MODULE

LEAKAGE CURRENT：3.5 mA. MAX. AT NOMINAL VOLTAGE 250VAC

REMOTE SENSING DESIGN

DIMENSION：330mm (D) x 206mm (W) x 41.5mm (H)

THE POWER-SUPPLY IS FOR CHASSIS-ASSEMBLY ONLY AND IS NOT ALLOWED TO BE OPERATED AS STAND-ALONE COMPONENT. FINAL ASSEMBLY HAS TO COMPLY WITH CORRESPONDING EMC- AND SAFETY-REGULATIONS.

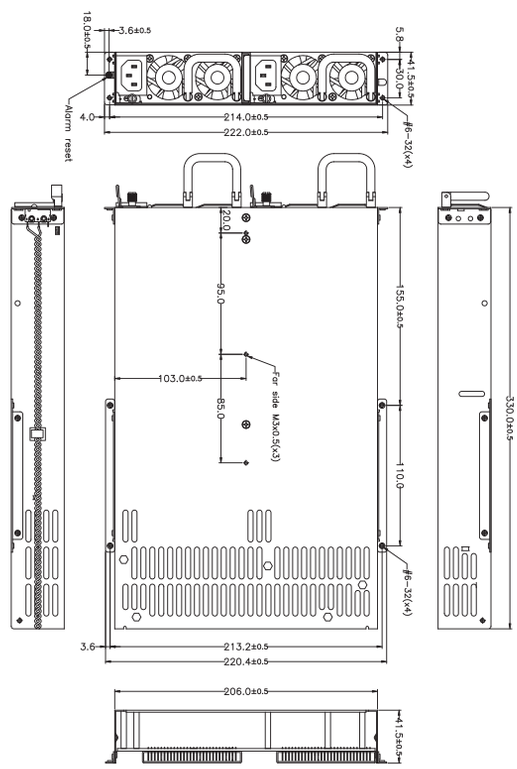

INPUT CHARACTERISTICS

VOLTAGE：

90~264 VAC FULL RANGE

FREQUENCY：

47 ~ 63HZ

INPUT CURRENT：

11/5.5A MAX AT ANY LOW/HIGH INPUT VOLTAGE

INRUSH CURRENT：

60/80 AMPS @ 115/230VAC

POWER FACTOR CORRECTION：

PFC CAN REACH THE TARGET OF 95% @ 115V, FULL LOAD, FOLLOWING THE STANDARD OF IEC 1000-3-2

EMI：

IEC61000-3-2, FCC, CISPR 22(EN 55022)

EMS：

EN 61000-4-2 ESD, EN61000-4-4 EFT, EN61000-4-5 SURGE

SAFETY：

TO MEET UL, CUL, TUV

E143756

OUTPUT CHARACTERISTICS

MODEL	WATTAGE	OUTPUT					
		+5V	+12V	+3.3V	-5V	-12V	+5VSB
RP1U-5240V	240W	20A	20A	20A	X	0.3A	2.5A
REGULATION LOAD		±5%	±5%	±5%	X	±10%	±5%
RIPPLE AND NOISE		50mV	120mV	50mV	X	120mV	50mV

REMARKS：
THE OUTPUT CURRENT OF+5V & +3.3V NOT EXCEED 150 WATTS

RP1U-5240V

SPECIFICATION：

TEMPERATURE RANGE：OPERATING 0℃ ~50℃ , STORAGE –20℃ ~80℃

HOLD UP TIME：16 ms MINIMUM AT FULL LOAD & NORMAL INPUT VOLTAGE

EFFICIENCY：TYPICAL 78%±2 @ 230V FULL LOAD; EFFICIENCY CALCULATION：WHEN CALCULATING OUTPUT POWER, INTERNAL FAN CURRENT SHALL BE INCLUDED WITH 12V OUTPUT.

POWER GOOD SIGNALON DELAY 100 ms TO 600 ms, OFF DELAY 1 ms

OUTPUT PROTECTION：OPP / OVP / SCP

LEAKAGE CURRENT：3.5mA MAX. AT NOMINAL VOLTAGE 264VAC

DIMENSION：270mm (D) x 100mm (W) x 40.5mm (H)

THE POWER-SUPPLY IS FOR CHASSIS-ASSEMBLY ONLY AND IS NOT ALLOWED TO BE OPERATED AS STAND-ALONE COMPONENT. FINAL ASSEMBLY HAS TO COMPLY WITH CORRESPONDING EMC- AND SAFETY-REGULATIONS.

INPUT CHARACTERISTICS

VOLTAGE：

90~264 VAC FULL RANGE

FREQUENCY：

47 ~ 63HZ

INPUT CURRENT：

4/2A @ ANY LOW/HIGH RANGE INPUT VOLTAGE

INRUSH CURRENT：

35/70A MAX. @ 115/230 VAC

POWER FACTOR CORRECTION：

PFC CAN REACH THE TARGET OF 95% AT 115VAC 90%@230VAC, FULL LOAD

EMI：

IEC61000-3-2, FCC, CISPR 22(EN 55022)

EMS：

EN 61000-4-2 ESD, EN61000-4-4 EFT, EN61000-4-5 SURGE

SAFETY：

TO MEET UL&CUL, TUV, CCC

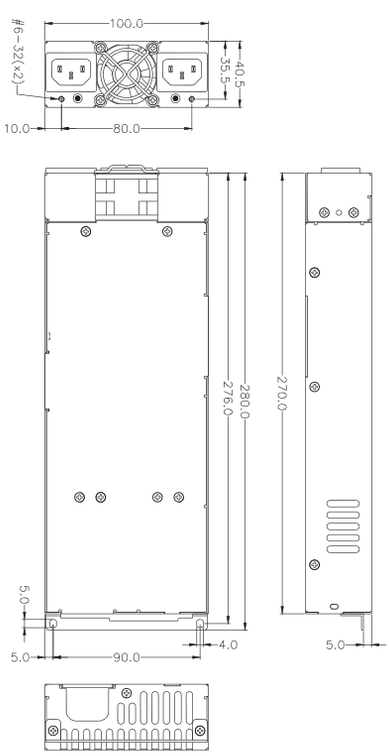

E143756

PMBus Optional

M1V2-5800V4V
M1V2-5801V4V

OUTPUT CHARACTERISTICS

MODEL	WATTAGE	OUTPUT					
		+5V	+12V	+3.3V	-5V	-12V	+5VSB
M1V2-5800V4V	800W	22A	66A	22A	X	0.5A	3A
M1V2-5801V4V	800W	35A	66A	31A	X	0.5A	3A
REGULATION LOAD		±5%	±5%	±5%	X	±5%	±5%
RIPPLE AND NOISE		50mV	120mV	50mV	X	120mV	50mV

REMARKS：
POWER MODULE TOTAL OUTPUT POWER OF +5V AND +3.3V NOT EXCEED 150W (MIV2-5800V4V); +5V AND +3.3V NOT EXCEED 210W (MIV2-5801V4V)

SPECIFICATION：

TEMPERATURE RANGE：OPERATING 0℃～ 50℃ · STORAGE-20℃～ 80℃

HOLD UP TIME：11mS MIN. AT FULL LOAD & 115 VAC INPUT VOLTAGE

EFFICIENCY：TYPICAL 85% AT 115V, TYPICAL 88% AT 230V, FULL LOAD (PER SET)

OUTPUT PROTECTION：OPP / OVP / SCP

WARNING METHOD： LED, BUZZER, TTL SIGNAL

HOT-SWAPPABLE/HOT PLUGGABLE REDUNDANCY FUNCTION

REMOTE SENSING DESIGN

DIMENSION：400mm (D) X 54.5mm (W) X 84.6mm (H)

THE POWER-SUPPLY IS FOR CHASSIS-ASSEMBLY ONLY AND IS NOT ALLOWED TO BE OPERATED AS STAND-ALONE COMPONENT. FINAL ASSEMBLY HAS TO COMPLY WITH CORRESPONDING EMC- AND SAFETY-REGULATIONS.

INPUT CHARACTERISTICS

VOLTAGE：

90~264 VAC FULL RANGE

FREQUENCY：

47 ～ 63HZ

INPUT CURRENT：

12/6A MAX AT ANY LOW/HIGH INPUT VOLTAGE

INRUSH CURRENT：

15/30A @ 115/230VAC

POWER FACTOR CORRECTION：

POWER FACTOR CORRECTIONPFC CAN REACH THE TARGET OF 95% AT 115/230VAC, FULL LOAD

EMI：

IEC61000-3-2, FCC, CISPR 22(EN 55022)

EMS：

EN 61000-4-2 ESD, EN61000-4-4 EFT, EN61000-4-5 SURGE

SAFETY：

TO MEET UL&CUL, TUV, CCC

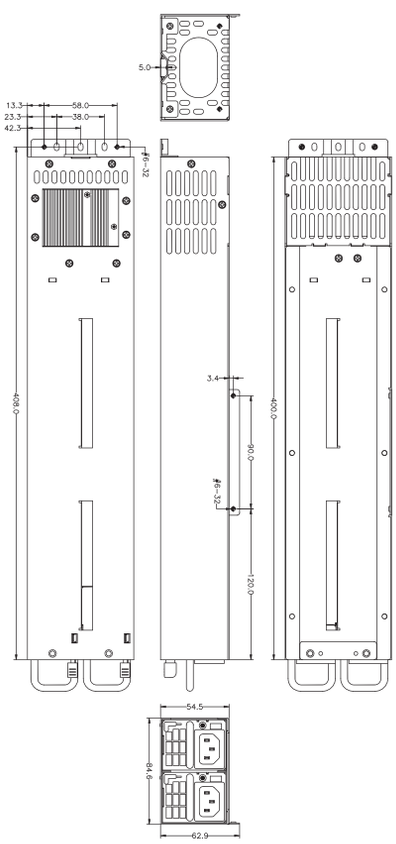

E143756

2U REDUNDANT

M1V2-5807V4D

OUTPUT CHARACTERISTICS

MODEL	WATTAGE	OUTPUT					
		+5V1 +5V2	+12V1 +12V2	+3.3V1 +3.3V2	-5V -5V	-12V1 -12V2	+5VSB1 +5VSB2
M1V2-5807V4D	800W	20A	32A	20A	X	0.5A	2A
REGULATION LOAD		±5%	±5%	±5%	X	±5%	±5%
RIPPLE AND NOISE		50mV	120m	50v	X	120mV	50mV

REMARKS：
TOTAL MAX OUTPUT OF +5V1 AND +3.3V1 NOT EXCEED 135W
TOTAL MAX OUTPUT OF +12V1, +5V1, +3.3V1, -12V1, +5VSB1 NOT EXCEED 400W
TOTAL MAX OUTPUT OF +5V2 AND +3.3V2 NOT EXCEED 135W
TOTAL MAX OUTPUT OF +12V2, +5V2, +3.3V2, -12V2, +5VSB2 NOT EXCEED 400W
TOTAL MAX OUTPUT OF +5VSB1 AND +5VSB2 NOT EXCEED 15W
TOTAL MAX OUTPUT NO EXCEED 800W

SPECIFICATION：

TEMPERATURE RANGE：OPERATING 0℃～ 50℃ · STORAGE -20℃～ 80℃

HOLD UP TIME：11mS MIN. AT FULL LOAD & 115 VAC INPUT VOLTAGE

EFFICIENCY：TYPICAL 85% AT 115V, TYPICAL 88% AT 230V, FULL LOAD (PER SET)

OUTPUT PROTECTION：OPP / OVP / SCP / OCP

FAULTY ALARM METHODS：LED, BUZZER, TTL SIGNAL

HOT-SWAPPABLE/HOT PLUGGABLE REDUNDANCY FUNCTION

LEAKAGE CURRENT：INPUT LEAKAGE CURRENT FROM LINE TO GROUND WILL BE LESS THAN 3.5MA RMS. MEASUREMENT WILL BE MADE AT 240 VAC AND 60HZ.

DIMENSION：450(D) X 54.5(W) X 84.6(H) mm

THE POWER-SUPPLY IS FOR CHASSIS-ASSEMBLY ONLY AND IS NOT ALLOWED TO BE OPERATED AS STAND-ALONE COMPONENT. FINAL ASSEMBLY HAS TO COMPLY WITH CORRESPONDING EMC- AND SAFETY-REGULATIONS.

INPUT CHARACTERISTICS

VOLTAGE：

90~264 VAC FULL RANGE

FREQUENCY：

47 ～ 63HZ

INPUT CURRENT：

12/6A MAX AT ANY LOW/HIGH INPUT VOLTAGE

INRUSH CURRENT：

15/30A @ 115/230VAC

POWER FACTOR CORRECTION：

PFC CAN REACH THE TARGET OF 95% @ 115V, FULL LOAD, FOLLOWING THE STANDARD OF IEC 61000-3-2

EMI：

IEC61000-3-2, FCC, CISPR 22(EN 55022)

EMS：

EN 61000-4-2 ESD, EN6100-4-4 EFT, EN61000-4-5 SURGE

SAFETY：

TO MEET UL&CUL, TUV, CCC

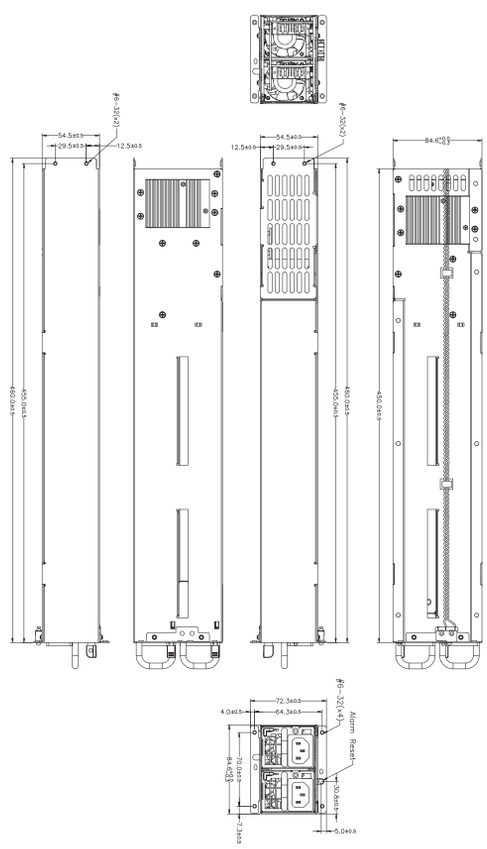

PMBus Optional

M1U2-5650V4V
M1U2-5750V4V
M1U2-5651V4V
M1U2-5751V4V

INPUT CHARACTERISTICS

VOLTAGE：

90~264 VAC FULL RANGE

FREQUENCY：

47 ~ 63HZ

INPUT CURRENT：

WATTAGE	115V	230V
650W	10A	5A
750W	12A	6A

INRUSH CURRENT：

15/30 AMPS @ 115/230VAC

POWER FACTOR CORRECTION：

PFC CAN REACH THE TARGET OF 98% AT 110V, FULL LOAD

EMI：

IEC61000-3-2, FCC, CISPR 22(EN 55022)

EMS：

EN 61000-4-2 ESD, EN61000-4-4 EFT, EN61000-4-5 SURGE

SAFETY：

TO MEET UL&CUL, TUV, CCC

E143756

OUTPUT CHARACTERISTICS

MODEL	WATTAGE	OUTPUT					
		+5V	+12V	+3.3V	-5V	-12V	+5VSB
M1U2-5650V4V	650W	22A	54A	22A	X	0.5A	3A
M1U2-5750V4V	750W	22A	62A	22A	X	0.5A	3A
M1U2-5651V4V	650W	35A	54A	31A	X	0.5A	3A
M1U2-5751V4V	750W	35A	62A	31A	X	0.5A	3A
REGULATION LOAD		±5%	±5%	±5%	X	±5%	±5%
RIPPLE AND NOISE		50mV	120mV	50mV	X	120mV	50mV

REMARKS：
POWER MODULE TOTAL OUTPUT POWER OF +5V AND +3.3V NOT EXCEED 150W (M1U2-5650V4V / M1U2-5750V4V) 210W (M1U2-5651V4V / M1U2-5751V4V)

SPECIFICATION：

TEMPERATURE RANGE:OPERATING 0℃ ~50℃ · STORAGE -20℃ ~80℃

HOLD UP TIME：11mS MIN. AT FULL LOAD & 115 VAC INPUT VOLTAGE

EFFICIENCY：TYPICAL 85% @ 115V, 88% @ 230V, FULL LOAD (PER SET)

POWER GOOD SIGNAL：ON DELAY 100mS TO 500mS

OUTPUT PROTECTION：OPP / OVP / SCP

WARNING METHOD： LED, BUZZER, TTL SIGNAL

HOT-SWAPPABLE/HOT PLUGGABLE REDUNDANCY FUNCTION

REMOTE SENSING DESIGN

DIMENSION：400mm (D) x 54.5mm (W) x 84.6mm (H)

THE POWER-SUPPLY IS FOR CHASSIS-ASSEMBLY ONLY AND IS NOT ALLOWED TO BE OPERATED AS STAND-ALONE COMPONENT. FINAL ASSEMBLY HAS TO COMPLY WITH CORRESPONDING EMC- AND SAFETY-REGULATIONS.

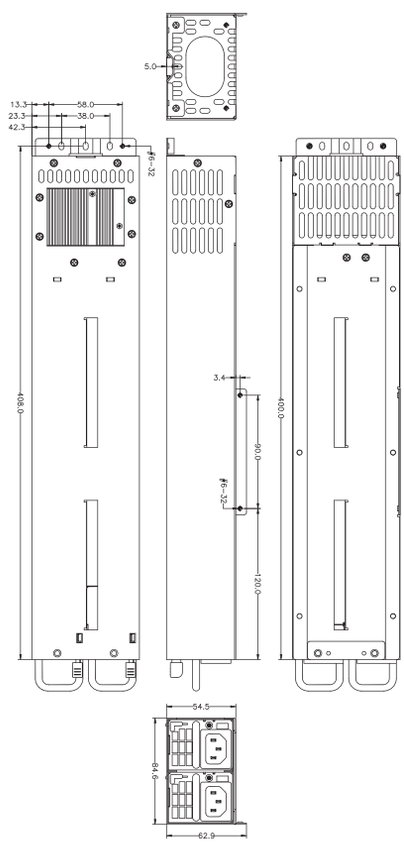

M1K2-5A00V4V
M1K2-5C00V4V
M1K2-5A01V4V
M1K2-5C01V4V

INPUT CHARACTERISTICS

VOLTAGE：

90~264 VAC FULL RANGE

FREQUENCY：

47 ~ 63HZ

INPUT CURRENT：

7.5A（RMS）FOR 230VAC, 15A（RMS）FOR 115VAC

INRUSH CURRENT：

15A MAX. FOR 115 VAC PER MODULE, 30A MAX. FOR 230 VAC PER MODULE

POWER FACTOR CORRECTION：

PFC CAN REACH THE TARGET OF 98% AT 110V, FULL LOAD

EMI：

IEC61000-3-2, FCC, CISPR 22(EN 55022)

EMS：

EN 61000-4-2 ESD, EN61000-4-4 EFT, EN61000-4-5 SURGE

SAFETY：

TO MEET UL&CUL, TUV, CCC

E143756

OUTPUT CHARACTERISTICS

MODEL	WATTAGE	OUTPUT					
		+5V	+12V	+3.3V	-5V	-12V	+5VSB
M1K2-5A00V4V	1000W	22A	83A	22A	X	0.5A	3A
M1K2-5C00V4V	1200W	22A	100A	22A	X	0.5A	3A
M1K2-5A01V4V	1000W	36A	83A	31A	X	0.5A	3A
M1K2-5C01V4V	1200W	36A	100A	31A	X	0.5A	3A
REGULATION LOAD		±5%	±5%	±5%	X	±5%	±5%
RIPPLE AND NOISE		50mV	120mV	50mV	X	120mV	50mV

REMARKS：
POWER MODULE TOTAL OUTPUT POWER OF +5V AND +3.3V NOT EXCEED 150W (M1K2-5A00V4V / M1K2-5C00V4V) 210W (M1K2-5A01V4V / M1K2-5C01V4V)

SPECIFICATION：

TEMPERATURE RANGE：OPERATING 0℃ ~50℃ · STORAGE -20℃ ~80℃

HOLD UP TIME：10mS MIN. AT FULL LOAD & 115 VAC INPUT VOLTAGE

EFFICIENCY：TYPICAL 83% AT 115V, TYPICAL 86% AT 230V, FULL LOAD (PER SET)

POWER GOOD SIGNAL：ON DELAY 100mS TO 500mS

OUTPUT PROTECTION：OPP / OVP / SCP

WARNING METHOD：LED, BUZZER, TTL SIGNAL

HOT-SWAPPABLE/HOT PLUGGABLE REDUNDANCY FUNCTION

DIMENSION：425mm (D) x 54.5mm(W) x 84.6mm (H)

THE POWER-SUPPLY IS FOR CHASSIS-ASSEMBLY ONLY AND IS NOT ALLOWED TO BE OPERATED AS STAND-ALONE COMPONENT. FINAL ASSEMBLY HAS TO COMPLY WITH CORRESPONDING EMC- AND SAFETY-REGULATIONS.

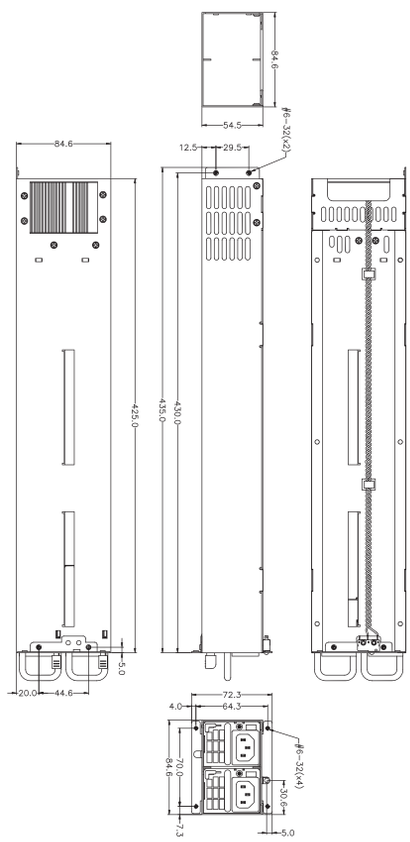

M1K2-2C00V4D

OUTPUT CHARACTERISTICS

MODEL	WATTAGE	OUTPUT					
		+5V	+12V1 +12V2	+3.3V	-5V	-12V	+5VSB1 +5VSB2
M1K2-2C00V4D	1200W	X	42	X	X	X	2
REGULATION LOAD		X	±5%	X	X	X	±5%
RIPPLE AND NOISE		X	120mV	X	X	X	50mV

REMARKS：
TOTAL OUTPUT POWER NOT EXCEED： 1200W (MAX)
5VSB1, 5VSB2 TOTAL OUTPUT MAX：15W

SPECIFICATION：

TEMPERATURE RANGE：OPERATING 0℃ ~50℃ · STORAGE -20℃ ~80℃

HOLD UP TIME：17mS MIN. AT FULL LOAD & 115 VAC INPUT VOLTAGE

EFFICIENCY：TYPICAL 83% AT 115V, TYPICAL 86% AT 230V, FULL LOAD (PER SET)

POWER GOOD SIGNAL：ON DELAY 100mS TO 600mS

OUTPUT PROTECTION：OPP / OVP / SCP / OCP

WARNING METHOD：LED, BUZZER, TTL SIGNAL

HOT-SWAPPABLE/HOT PLUGGABLE REDUNDANCY FUNCTION

DIMENSION：450mm (D) x 54.5mm (W) x 84.6mm (H)

THE POWER-SUPPLY IS FOR CHASSIS-ASSEMBLY ONLY AND IS NOT ALLOWED TO BE OPERATED AS STAND-ALONE COMPONENT. FINAL ASSEMBLY HAS TO COMPLY WITH CORRESPONDING EMC- AND SAFETY-REGULATIONS.

INPUT CHARACTERISTICS

VOLTAGE：

90~264 VAC FULL RANGE

FREQUENCY：

47 ~ 63HZ

INPUT CURRENT：

7.5A（RMS）FOR 230VAC, 15A（RMS）FOR 115VAC

INRUSH CURRENT：

15A MAX. FOR 115 VAC PER MODULE, 30A MAX. FOR 230 VAC PER MODULE

POWER FACTOR CORRECTION：

PFC CAN REACH THE TARGET OF 95% AT 110V, FULL LOAD

EMI：

IEC61000-3-2, FCC, CISPR 22(EN 55022)

EMS：

EN 61000-4-2 ESD, EN61000-4-4 EFT, EN61000-4-5 SURGE

SAFETY：

TO MEET UL&CUL, TUV, CCC

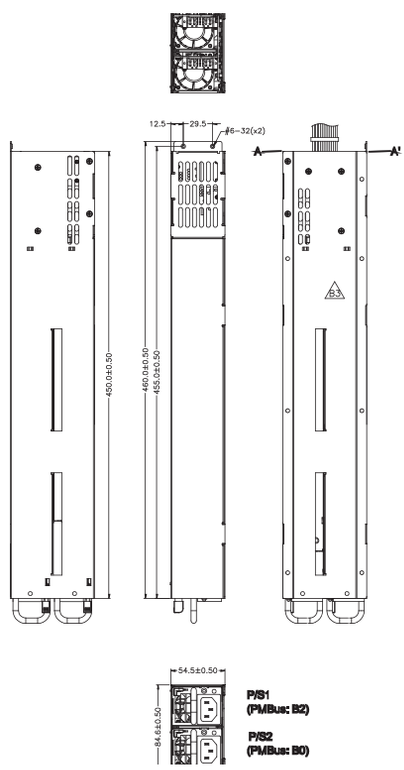

M1K2-2C00V4Q

OUTPUT CHARACTERISTICS

MODEL	WATTAGE	OUTPUT					
		+5V	+12V1 ~+12V4	+3.3V	-5V	-12V	+5VSB1 ~+5VSB4
M1K2-2C00V4Q	1200W	X	25A	X	X	X	1A
REGULATION LOAD		X	±5%	X	X	X	±5%
RIPPLE AND NOISE		X	120mV	X	X	X	50mV

REMARKS：
+5VSB1,+5VSB2,+5VSB3,+5VSB4 TOTAL MAX：15W
TOTAL OUTPUT POWER NOT EXCEED：1200W (MAX)

SPECIFICATION：

TEMPERATURE RANGE：OPERATING 0℃ ~ 50℃ , STORAGE –20℃ ~80℃

POWER SUPPLY EFFICIENCY TYPICAL 83% AT 115V,12V/100A,5VSB/0.1A(PES SET)

POWER SUPPLY EFFICIENCY TYPICAL 86% AT 230V · 12V/100A,5VSB/0.1A(PES SET)

POWER GOOD SIGNAL：ON DELAY 100 mS TO 600 mS

HOLD UP TIME：WHEN POWER SHUTDOWN DC OUTPUT 12V MUST BE MAINTAIN 10MSEC IN REGULATION LIMIT AT 115 VAC INPUT VOLTAGE AND 1000W OUTPUT LOAD

LEAKAGE CURRENT：3.5mA MAX. AT FULL LOAD 240VAC AND 60HZ

OUTPUT PROTECTION：OPP / OVP / OCP / SCP

DIMENSION：450(D) × 54.5(W) × 84.6(H) MM

THE POWER-SUPPLY IS FOR CHASSIS-ASSEMBLY ONLY AND IS NOT ALLOWED TO BE OPERATED AS STAND-ALONE COMPONENT. FINAL ASSEMBLY HAS TO COMPLY WITH CORRESPONDING EMC- AND SAFETY-REGULATIONS.

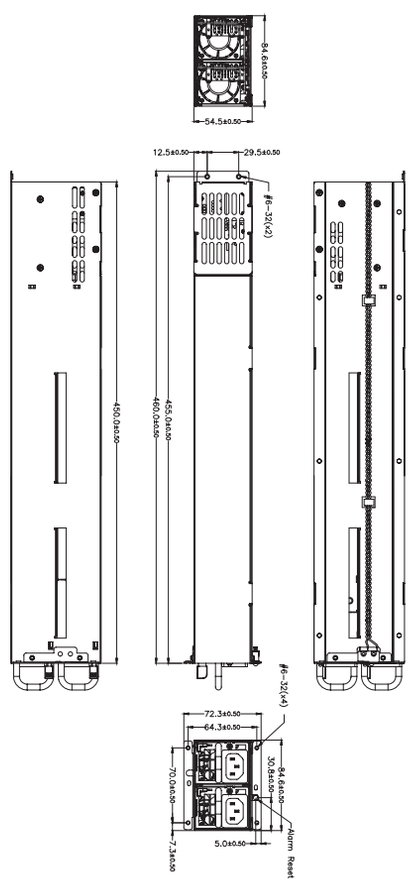

INPUT CHARACTERISTICS

VOLTAGE：

90 - 264 VAC FULL RANGE

FREQUENCY：

47 ~ 63HZ

INPUT CURRENT (PER POWER MODULE)：

15/8A FOR 115/230VAC

INRUSH CURRENT (PER POWER MODULE)：

15/30A MAX. FOR 115/230VAC (25℃)

EMI：

IEC61000-3-2, FCC, CISPR 22(EN 55022)

EMS：

EN 61000-4-2 ESD, EN61000-4-4 EFT, EN61000-4-5 SURGE

SAFETY：

TO MEET UL, CUL, TUV, CCC

E143756

OUTPUT CHARACTERISTICS

MODEL	WATTAGE	OUTPUT					
		+5V	+12V	+3.3V	-5V	-12V	+5VSB
M1H2-5AD0V0V	1400W	36A	116A	31A	X	0.5A	3A
REGULATION LOAD		±5%	±5%	±5%	X	±10%	±5%
RIPPLE AND NOISE		50mV	120mV	50mV	X	120mV	50mV

REMARKS：
+5V AND +3.3V NOT EXCEED 210W; TOTAL POWER NOT EXCEED 1000W AT 90~264V, 1200W AT 115~264V, 1400W AT 180~264V

M1H2-5AD0V0V

SPECIFICATION：

TEMPERATURE RANGE：OPERATING 0℃ ~ 50℃ · STORAGE -20℃ ~ 80℃

HOLD UP TIME：TEST AT 1000W OUTPUT AND INPUT >115VAC, 11mS AT 80% LOAD

EFFICIENCY：TYPICAL 83% AT 115V, MAX LOAD (PER SET)
TYPICAL 86% AT 230V, MAX LOAD (PER SET)

POWER GOOD SIGNAL：ON DELAY 100mS TO 500mS

OUTPUT PROTECTION：OPP / OVP / OCP / SCP

FAULTY ALARM METHODS：LED, BUZZER, TTL SIGNAL

HOT-SWAPPABLE/HOT PLUGGABLE REDUNDANCY FUNCTION

ISOLATION：BUILT-IN THE POWER MODULE

LEAKAGE CURRENT：3.5 mA. MAX. AT NOMINAL VOLTAGE 240VAC

REMOTE ON/OFF CONTROL

DIMENSION：450mm (D) x 54.5mm (W) x 84.6mm (H)

THE POWER-SUPPLY IS FOR CHASSIS-ASSEMBLY ONLY AND IS NOT ALLOWED TO BE OPERATED AS STAND-ALONE COMPONENT. FINAL ASSEMBLY HAS TO COMPLY WITH CORRESPONDING EMC- AND SAFETY-REGULATIONS.

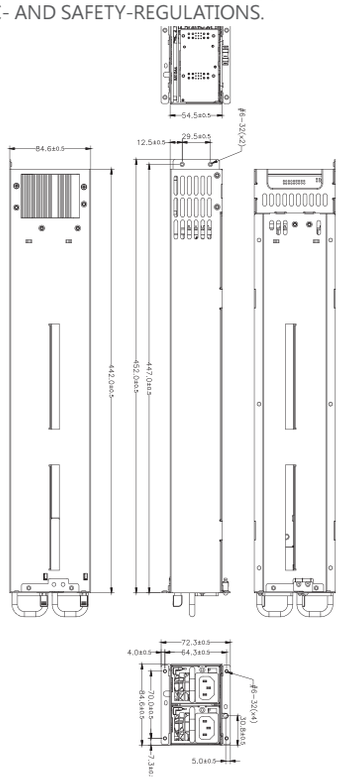

INPUT CHARACTERISTICS

VOLTAGE：

90~264 VAC FULL RANGE

FREQUENCY：

47 ~ 63HZ

INPUT CURRENT：

15/10A MAX AT ANY LOW/HIGH INPUT VOLTAGE

INRUSH CURRENT：

15/30 AMPS @ 115/230 VAC

POWER FACTOR CORRECTION：

PFC CAN REACH THE TARGET OF 95% @ 115V AND 90% @230V, FULL LOAD, FOLLOWING THE STANDARD OF IEC 1000-3-2

EMI：

IEC61000-3-2, FCC, CISPR 22(EN 55022)

EMS：

EN 61000-4-2 ESD, EN61000-4-4 EFT, EN61000-4-5 SURGE

SAFETY：

TO MEET UL&CUL, TUV, CCC

E143756

OUTPUT CHARACTERISTICS

MODEL	WATTAGE	OUTPUT					
		+5V	+12V1 ~+12V2	+3.3V	-5V	-12V	+5VSB ~+5VSB2
M1K2-2A07V4D	1400W	X	42A	X	X	X	1.5A
REGULATION LOAD		X	±5%	X	X	X	±5%
RIPPLE AND NOISE		X	120mV	X	X	X	50mV

REMARKS：
TOTAL OUTPUT POWER NOT EXCEED：1000W (MAX).

M1K2-2A07V4D

SPECIFICATION：

TEMPERATURE RANGE：OPERATING 0℃ ~ 50℃ , STORAGE –20℃ ~80℃

POWER SUPPLY EFFICIENCY TYPICAL 83% AT 115V,12V/83A,5VSB/0.1A(PER SET)

POWER SUPPLY EFFICIENCY TYPICAL 86% AT 230V · 12V/83A,5VSB/0.1A(PER SET)

POWER GOOD SIGNAL：ON DELAY 100 mS TO 500 mS

HOLD UP TIME：WHEN POWER SHUTDOWN DC OUTPUT 12V MUST BE MAINTAIN 17MSEC IN REGULATION LIMIT AT 115 VAC INPUT VOLTAGE AND 1000W OUTPUT LOAD

OUTPUT PROTECTION：OCP

DIMENSION：485(D) × 54.5(W) × 84.6(H) MM

THE POWER-SUPPLY IS FOR CHASSIS-ASSEMBLY ONLY AND IS NOT ALLOWED TO BE OPERATED AS STAND-ALONE COMPONENT. FINAL ASSEMBLY HAS TO COMPLY WITH CORRESPONDING EMC- AND SAFETY-REGULATIONS.

INPUT CHARACTERISTICS

VOLTAGE：

90 - 264 VAC FULL RANGE

FREQUENCY：

47 ~ 63HZ

INPUT CURRENT (PER POWER MODULE)：

15/7.5 FOR 115/230VAC

INRUSH CURRENT (PER POWER MODULE)：

15/30A MAX. FOR 115/230VAC (25℃)

POWER FACTOR CORRECTION：

PFC CAN REACH THE TARGET OF 95% @ 115V, FULL LOAD, FOLLOWING THE STANDARD OF IEC 61000-3-2

EMI：

IEC61000-3-2, FCC, CISPR 22(EN 55022)

EMS：

EN 61000-4-2 ESD, EN61000-4-4 EFT, EN61000-4-5 SURGE

SAFETY：

TO MEET UL, CUL, TUV

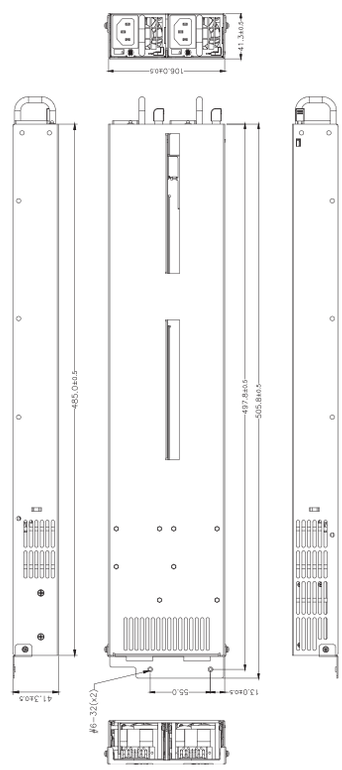

PSS2-5A00V3V

OUTPUT CHARACTERISTICS

MODEL	WATTAGE	OUTPUT					
		+5V	+12V	+3.3V	-5V	-12V	+5VSB
PSS2-5A00V3V	1000W	22A	83A	22A	X	0.5A	4A
REGULATION LOAD		±5%	±5%	±5%	X	±5%	±5%
RIPPLE AND NOISE		50mV	120mV	50mV	X	120mV	50mV

REMARKS：
POWER MODULE TOTAL OUTPUT POWER OF +5V & +3.3V NOT EXCEED 150W

SPECIFICATION：

TEMPERATURE RANGE：OPERATING：0°C ~ 50°C ; STORAGE： -20°C ~ 80°C

HOLD UP TIME：5V MUST MAINTAIN 10 mS IN REGULATION LIMIT AT 90V INPUT VOLTAGE

EFFICIENCY：TYPICAL 83% AT 115V, TYPICAL 86% AT 230V, FULL LOAD (PER SET)

POWER GOOD SIGNAL：ON DELAY 100 ms TO 500 ms

OUTPUT PROTECTION：OPP / OVP / SCP

FAULTY ALARM METHODS：LED, BUZZER, TTL SIGNAL

HOT-SWAPPABLE/HOT PLUGGABLE REDUNDANCY FUNCTION

ISOLATION：BUILT-IN THE POWER MODULE

REMOTE SENSING DESIGN

DIMENSION：385mm (D) x 65mm (W) x 84mm (H)

THE POWER-SUPPLY IS FOR CHASSIS-ASSEMBLY ONLY AND IS NOT ALLOWED TO BE OPERATED AS STAND-ALONE COMPONENT. FINAL ASSEMBLY HAS TO COMPLY WITH CORRESPONDING EMC- AND SAFETY-REGULATIONS.

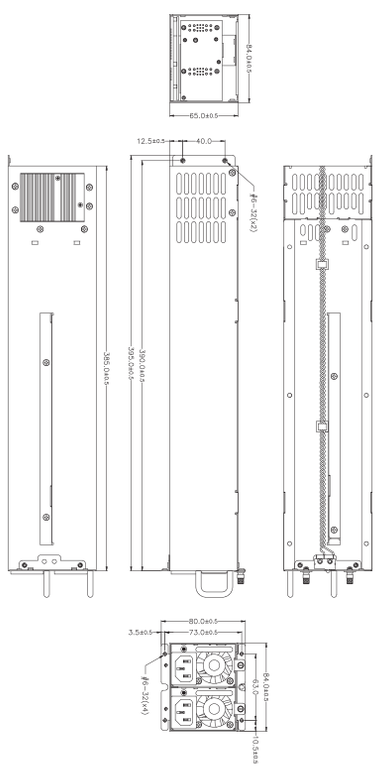

INPUT CHARACTERISTICS

VOLTAGE：

90~264 VAC FULL RANGE

FREQUENCY：

47 ~ 63HZ

INPUT CURRENT：

15A/7.5A @ ANY LOW/HIGH RANGE INPUT VOLTAGE

INRUSH CURRENT：

15/30AMPS @ 115/230 VAC

POWER FACTOR CORRECTION：

PFC CAN REACH THE TARGET OF 95% @ 115V, FULL LOAD, FOLLOWING THE STANDARD OF IEC 61000-3-2

EMI：

IEC61000-3-2, FCC, CISPR 22(EN 55022)

EMS：

EN 61000-4-2 ESD, EN61000-4-4 EFT, EN61000-4-5 SURGE

SAFETY：

TO MEET UL&CUL, TUV

E143756

OUTPUT CHARACTERISTICS

MODEL	WATTAGE	OUTPUT					
		+5V	+12V	+3.3V	-5V	-12V	+5VSB
R1S2-5120V0V	120W	10A	10A	10A	X	0.3A	3.0A
REGULATION LOAD		±5%	±5%	±5%	X	±5%	±5%
RIPPLE AND NOISE		50mV	120mV	50mV	X	120mV	50mV

REMARKS：
POWER MODULE TOTAL OUTPUT POWER OF +5V AND +3.3V NOT EXCEED 80W;
POWER MODULE TOTAL OUTPUT POWER NOT EXCEED 120W

R1S2-5120V0V

SPECIFICATION：

TEMPERATURE RANGE：OPERATING 0℃ ~ 50℃ , STORAGE -20℃ ~80℃

HOLD UP TIME：WHEN POWER SHUTDOWN ALL DC OUTPUT MUST BE MAINTAIN 17MSEC IN REGULATION LIMIT AT NORMAL INPUT VOLTAGE

EFFICIENCY：TYPICAL 85% AT 230V, 50% OF FULL LOAD (PER SET)

LEAKAGE CURRENT：3.5 MA. MAX. AT NOMINAL VOLTAGE 250VAC

POWER GOOD SIGNAL：ON DELAY 100mS TO 700mS

OUTPUT PROTECTION：OPP / OVP / SCP

WARNING METHOD：AUDIO ALARM(BUZZER SOUND, RESETABLE), FALUT LED, TTL

DIMENSION：150mm (D) × 85mm (W) × 84mm (H)

THE POWER-SUPPLY IS FOR CHASSIS-ASSEMBLY ONLY AND IS NOT ALLOWED TO BE OPERATED AS STAND-ALONE COMPONENT. FINAL ASSEMBLY HAS TO COMPLY WITH CORRESPONDING EMC- AND SAFETY-REGULATIONS.

INPUT CHARACTERISTICS

VOLTAGE：

90~264 VAC FULL RANGE

FREQUENCY：

47 ~ 63HZ

INPUT CURRENT：

2/1 AMPS MAXIMUM AT ANY LOW/HIGH RANGE INPUT VOLTAGE

INRUSH CURRENT：

35/70 AMPS @115/230VAC

POWER FACTOR CORRECTION：

PFC CAN REACH THE TARGET OF 95% @ 115V, FULL LOAD, FOLLOWING THE STANDARD OF IEC 61000-3-2

EMI：

IEC61000-3-2, FCC, CISPR 22(EN 55022)

EMS：

EN 61000-4-2 ESD, EN61000-4-4 EFT, EN61000-4-5 SURGE

SAFETY：

TO MEET UL&CUL, TUV

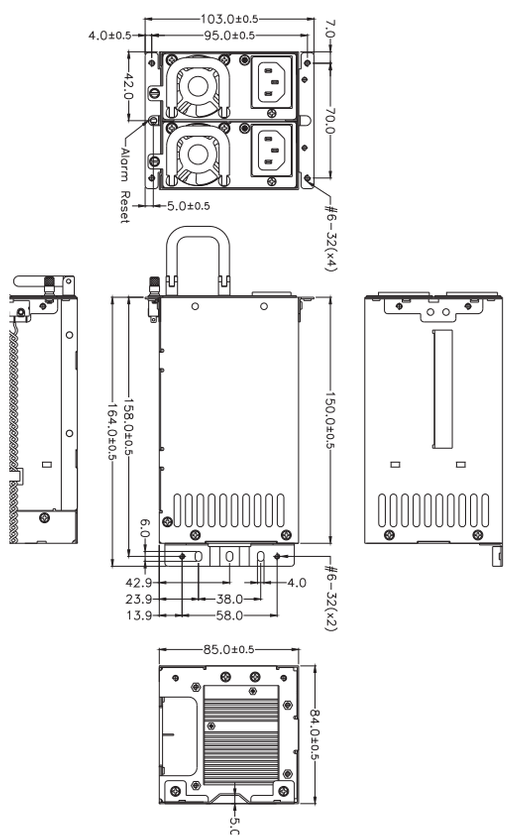

E143756

2U REDUNDANT

R1S2-5300V4V
R1S2-5380V4V

OUTPUT CHARACTERISTICS

MODEL	WATTAGE	OUTPUT					
		+5V	+12V	+3.3V	-5V	-12V	+5VSB
R1S2-5300V4V	300W	20	24	20	X	0.5	2.5
R1S2-5380V4V	380W	20	30	20	X	0.5	2.5
REGULATION LOAD		±5%	±5%	±5%	X	±10%	±5%
RIPPLE AND NOISE		50mV	120mV	50mV	X	120mV	50mV

REMARKS：
+5V AND +3.3V TOTAL OUTPUT MAX：140W

SPECIFICATION：

TEMPERATURE RANGE：OPERATING 0℃～ 40℃ , STORAGE -20℃ ~80℃

HOLD UP TIME：WHEN POWER SHUTDOWN DC OUTPUT 5V MUST BE MAINTAIN 16MSEC IN REGULATION LIMIT AT NORMAL INPUT VOLTAGE

EFFICIENCY：84% TYPICAL · AT FULL LOAD 115VAC

POWER GOOD SIGNAL：ON DELAY 100mS TO 550mS · OFF DELAY 1Ms

OUTPUT PROTECTION：OPP / OVP / SCP

FAULTY ALARM METHODS：LED, BUZZER, TTL SIGNAL

HOT-SWAPPABLE/HOT PLUGGABLE REDUNDANCY FUNCTION

ISOLATION：BUILT-IN THE POWER MODULE

LEAKAGE CURRENT：3.5 MA. MAX. AT NOMINAL VOLTAGE 250VAC

REMOTE SENSING DESIGN

DIMENSION：207mm (D) × 85mm (W) × 84mm (H)

THE POWER-SUPPLY IS FOR CHASSIS-ASSEMBLY ONLY AND IS NOT ALLOWED TO BE OPERATED AS STAND-ALONE COMPONENT. FINAL ASSEMBLY HAS TO COMPLY WITH CORRESPONDING EMC- AND SAFETY-REGULATIONS.

INPUT CHARACTERISTICS

VOLTAGE：

90~264 VAC FULL RANGE

FREQUENCY：

47 ～ 63HZ

INPUT CURRENT：

WATTAGE	115V	230V
300W	4.5	2
380W	5.5	2.5

INRUSH CURRENT：

15/30 AMPS @115/230VAC

POWER FACTOR CORRECTION：

PFC CAN REACH THE TARGET OF 95% @ 115V, FULL LOAD, FOLLOWING THE STANDARD OF IEC 61000-3-2

EMI：

IEC61000-3-2, FCC, CISPR 22(EN 55022)

EMS：

EN 61000-4-2 ESD, EN61000-4-4 EFT, EN61000-4-5 SURGE

SAFETY：

TO MEET UL, CUL, TUV, CCC

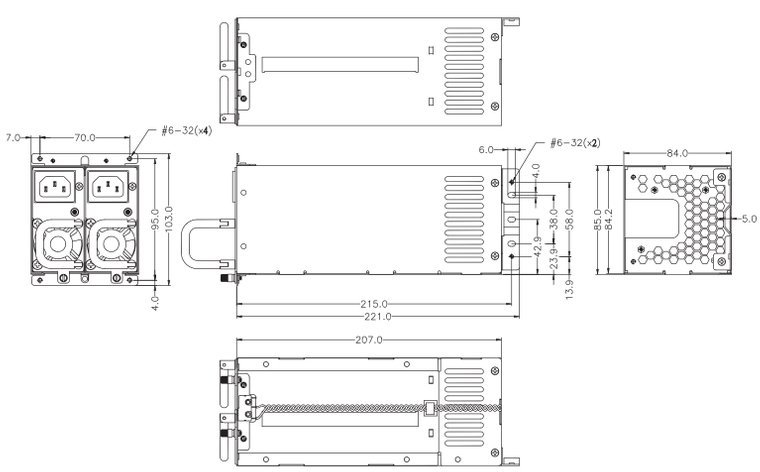

E143756

R1S2-5507V4V

OUTPUT CHARACTERISTICS

MODEL	WATTAGE	OUTPUT					
		+5V	+12V	+3.3V	-5V	-12V	+5VSB
R1S2-5507V4V	500W	20	37.5	20	X	0.5	2.5
REGULATION LOAD		±5%	±5%	±5%	X	±10%	±5%
RIPPLE AND NOISE		50mV	120mV	50mV	X	120mV	50mV

REMARKS：
+5V AND +3.3V TOTAL OUTPUT MAX：140W
TOTAL OUTPUT MAX ：500W

INPUT CHARACTERISTICS

VOLTAGE：

110 ~ 240 VAC (WITH ± 10% TOLERANCE)

FREQUENCY：

47 ~ 63HZ

INPUT CURRENT：

15 / 30 AMPS @115/230 VAC (AT 25 DEGREES AMBIENT COLD START FOR EACH POWER UNIT)

INRUSH CURRENT：

60/80 AMPS @115/230VAC

POWER FACTOR CORRECTION：

PFC CAN REACH THE TARGET OF 95% @ 115V, FULL LOAD, FOLLOWING THE STANDARD OF IEC 61000-3-2

EMI：

IEC61000-3-2, FCC, CISPR 22(EN 55022)

EMS：

EN 61000-4-2 ESD, EN61000-4-4 EFT, EN61000-4-5 SURGE

SAFETY：

TO MEET UL, CUL, TUV, CCC

SPECIFICATION：

TEMPERATURE RANGE：OPERATING 0℃ ~ 40℃ , STORAGE -20℃ ~80℃

HOLD UP TIME：WHEN POWER SHUTDOWN DC OUTPUT 5V MUST BE MAINTAIN 16MSEC IN REGULATION LIMIT AT NORMAL INPUT VOLTAGE

EFFICIENCY：82% TYPICAL · AT FULL LOAD 115VAC

POWER GOOD SIGNAL：ON DELAY 100mS TO 500mS · OFF DELAY 1ms

OUTPUT PROTECTION：OPP / OVP / SCP

FAULTY ALARM METHODS：LED, BUZZER, TTL SIGNAL

HOT-SWAPPABLE/HOT PLUGGABLE REDUNDANCY FUNCTION

ISOLATION：BUILT-IN THE POWER MODULE

LEAKAGE CURRENT：3.5 MA. MAX. AT NOMINAL VOLTAGE 250VAC

REMOTE ON/OFF CONTROL

DIMENSION：217mm (D) x 85mm (W) x 84mm (H)

THE POWER-SUPPLY IS FOR CHASSIS-ASSEMBLY ONLY AND IS NOT ALLOWED TO BE OPERATED AS STAND-ALONE COMPONENT. FINAL ASSEMBLY HAS TO COMPLY WITH CORRESPONDING EMC- AND SAFETY-REGULATIONS.

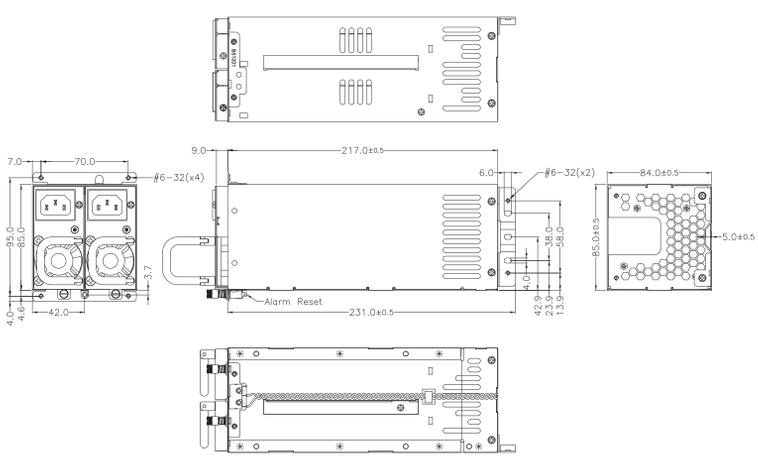

PMBus Optional

80 PLUS SILVER

M1P2-5300V4V
M1P2-5420V4V
M1P2-5500V4V

2U REDUNDANT

INPUT CHARACTERISTICS

VOLTAGE：

90V ~ 264VAC (WITH ± 10% TOLERANCE)

FREQUENCY：

47 ~ 63HZ

INPUT CURRENT：

5/3 MAX AT ANY LOW/HIGH INPUT VOLTAGE (300W) ; 8/4A MAX AT ANY LOW/HIGH INPUT VOLTAGE(420W.500W)

INRUSH CURRENT：

40/60A @ 115/230VAC (25℃)

POWER FACTOR CORRECTION：

PFC CAN REACH THE TARGET OF 95% @ 115V, FULL LOAD, FOLLOWING THE STANDARD OF IEC 1000-3-2

EMI：

IEC61000-3-2, FCC, CISPR 22(EN 55022)

EMS：

EN 61000-4-2 ESD, EN6100-4-4 EFT, EN61000-4-5 SURGE

SAFETY：

TO MEET UL, CUL, TUV, CCC

E143756

OUTPUT CHARACTERISTICS

MODEL	WATTAGE	OUTPUT					
		+5V	+12V	+3.3V	-5V	-12V	+5VSB
M1P2-5300V4V	300W	20A	25A	20A	X	0.5A	3.5A
M1P2-5420V4V	420W	32A	35A	25A	X	0.5A	3.5A
M1P2-5500V4V	500W	32A	41A	25A	X	0.5A	3.5A
REGULATION LOAD		±5%	±5%	±5%	X	±10%	±5%
RIPPLE AND NOISE		50mV	120mV	50mV	X	120mV	50mV

REMARKS：
+5V AND +3.3V TOTAL OUTPUT MAX ：140W / 170W / 170W ; TOTAL OUTPUT MAX 300W / 420W / 500W

SPECIFICATION：

TEMPERATURE RANGE：OPERATING：0℃ --- 40℃ , STORAGE：-20℃ --- 80℃

HOLD UP TIME：16 ms MINIMUM AT FULL LOAD & NORMAL INPUT VOLTAGE

EFFICIENCY：>80% TYPICAL AT 230 VAC FULL LOAD

POWER GOOD SIGNAL：ON DELAY 100 ms TO 500 ms, OFF DELAY 1 ms

OUTPUT PROTECTION：OPP / OVP / OCP / SCP

FAULTY ALARM METHODS：LED, BUZZER, TTL SIGNAL

HOT-SWAPPABLE/HOT PLUGGABLE REDUNDANCY FUNCTION

ISOLATION：BUILT-IN THE POWER MODULE

REMOTE SENSING DESIGN

DIMENSION：217mm (D) x 85mm (W) x 84mm (H)

THE POWER-SUPPLY IS FOR CHASSIS-ASSEMBLY ONLY AND IS NOT ALLOWED TO BE OPERATED AS STAND-ALONE COMPONENT. FINAL ASSEMBLY HAS TO COMPLY WITH CORRESPONDING EMC- AND SAFETY-REGULATIONS.

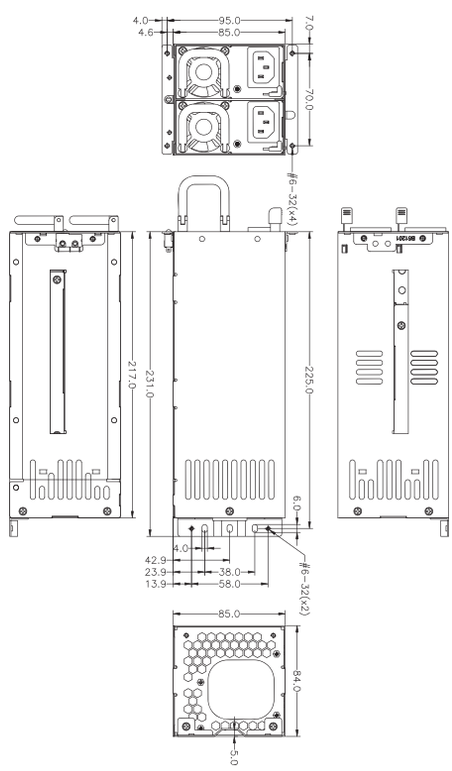

M1D2-5300V0V
M1D2-5400V0V
M1D2-5500G0V

INPUT CHARACTERISTICS

VOLTAGE：

90V ~ 264VAC (WITH ± 10% TOLERANCE)

FREQUENCY：

47 ~ 63HZ

INPUT CURRENT：

WATTAGE	115V	230V
300W	6	3
400W	7	3
500W	8	4

INRUSH CURRENT：

15/30A @115/230VAC

POWER FACTOR CORRECTION：

PFC CAN REACH THE TARGET OF 95% @ 115V, FULL LOAD, FOLLOWING THE STANDARD OF IEC 1000-3-2

EMI：

IEC61000-3-2, FCC, CISPR 22(EN 55022)

EMS：

EN 61000-4-2 ESD, EN6100-4-4 EFT, EN61000-4-5 SURGE

SAFETY：

TO MEET UL, CUL, TUV

E143756

OUTPUT CHARACTERISTICS

MODEL	WATTAGE	OUTPUT					
		+5V	+12V	+3.3V	-5V	-12V	+5VSB
M1D2-5300V0V	300W	22A	25A	22A	X	0.5A	3A
M1D2-5400V0V	400W	22A	33A	22A	X	0.5A	3A
M1D2-5500G0V	500W	22A	41A	22A	X	0.5A	3A
REGULATION LOAD		±5%	±5%	±5%	X	±5%	±5%
RIPPLE AND NOISE		50mV	120mV	50mV	X	120mV	50mV

REMARKS：
1. TOTAL MAX OUTPUT OF +5V AND +3.3V NOT EXCEED 150W.
2. POWER MODULE TOTAL OUTPUT POWER NOT EXCEED 300W/400W/500W

SPECIFICATION：

TEMPERATURE RANGE：OPERATING 0℃ ~ 50℃ , STORAGE -20℃ ~80℃

HOLD UP TIME：8mS MINIMUM AT 80% MAX. LOAD & NOMINAL INPUT VOLTAGE

EFFICIENCY：TYPICAL 88% AT 230V, FULL LOAD (PER SET)

INPUT LEAKAGE CURRENT FROM LINE TO GROUND WILL BE LESS THAN 3.5MA RMS. MEASUREMENT WILL BE MADE AT 240 VAC AND 60HZ.

OUTPUT PROTECTION：OPP / OVP / SCP / OCP

REMOTE ON/OFF CONTROL

BALANCE LOAD SHARING DESIGN

HOT-SWAPPABLE/HOT PLUGGABLE REDUNDANCY FUNCTION

ISOLATION：BUILT-IN THE POWER MODULE

FAULTY ALARM METHODS：LED, BUZZER, TTL SIGNAL

DIMENSION：170(D) × 101.2(W) × 84(H) mm

THE POWER-SUPPLY IS FOR CHASSIS-ASSEMBLY ONLY AND IS NOT ALLOWED TO BE OPERATED AS STAND-ALONE COMPONENT. FINAL ASSEMBLY HAS TO COMPLY WITH CORRESPONDING EMC- AND SAFETY-REGULATIONS.

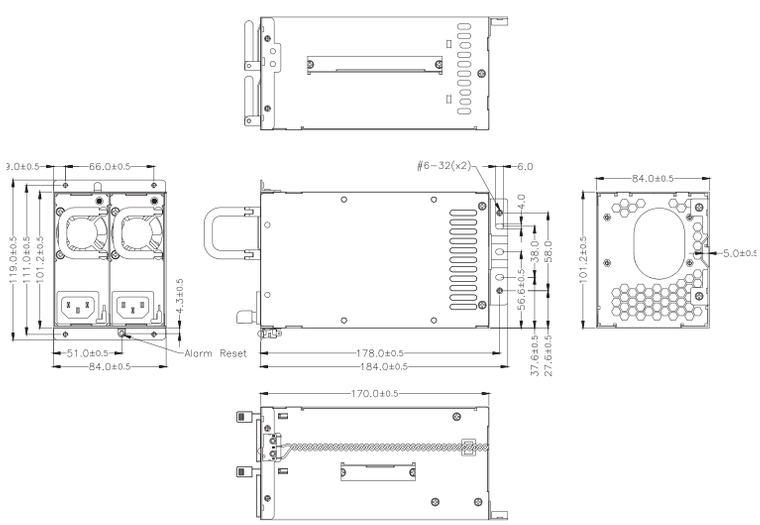

2U REDUNDANT

M1D2-5600V0V
M1D2-5700V0V
M1D2-5800V0V

OUTPUT CHARACTERISTICS

MODEL	WATTAGE	OUTPUT					
		+5V	+12V	+3.3V	-5V	-12V	+5VSB
M1D2-5600V0V	600W	36A	50A	31A	X	0.5A	3A
M1D2-5700V0V	700W	36A	58A	31A	X	0.5A	3A
M1D2-5800V0V	800W	36A	66A	31A	X	0.5A	3A
REGULATION LOAD		±5%	±5%	±5%	X	±5%	±5%
RIPPLE AND NOISE		50mV	120mV	50mV	X	120mV	50mV

REMARKS：
1. TOTAL MAX OUTPUT OF +5V AND +3.3V NOT EXCEED210W.
2. POWER MODULE TOTAL OUTPUT POWER NOT EXCEED 600W/700W/800W

SPECIFICATION：

TEMPERATURE RANGE：OPERATING 0℃ ~ 50℃ , STORAGE -20℃ ~80℃

HOLD UP TIME：11ms MINIMUM AT 80% MAX. LOAD & NOMINAL INPUT VOLTAGE

EFFICIENCY：(PER SET)：POWER SUPPLY EFFICIENCY TYPICAL 85 % AT 115V · FULL LOAD / POWER SUPPLY EFFICIENCY TYPICAL 88 % AT 230V · FULL LOAD.

INPUT LEAKAGE CURRENT FROM LINE TO GROUND WILL BE LESS THAN 3.5MA RMS. MEASUREMENT WILL BE MADE AT 240 VAC AND 60HZ.

OUTPUT PROTECTION：OPP / OVP / SCP / OCP

WARNING METHOD：AUDIO ALARM (BUZZER SOUND, RESETABLE), FALUT LED, TTL

DIMENSION：200(D) × 101.2(W) × 84(H) mm

THE POWER-SUPPLY IS FOR CHASSIS-ASSEMBLY ONLY AND IS NOT ALLOWED TO BE OPERATED AS STAND-ALONE COMPONENT. FINAL ASSEMBLY HAS TO COMPLY WITH CORRESPONDING EMC- AND SAFETY-REGULATIONS.

INPUT CHARACTERISTICS

VOLTAGE：

90 ~ 264VAC FULL RANGE

FREQUENCY：

47 ~ 63HZ

INPUT CURRENT：

WATTAGE	115V	230V
600	10	5
700	11	5.5
800	12	6

15/30A @115/230VAC

INRUSH CURRENT：

15/30A @ 115/230VAC (25℃)

POWER FACTOR CORRECTION：

PFC CAN REACH THE TARGET OF 95% @ 230V, FULL LOAD, FOLLOWING THE STANDARD OF IEC 1000-3-2

EMI：

IEC61000-3-2, FCC, CISPR 22(EN 55022)

EMS：

EN 61000-4-2 ESD, EN6100-4-4 EFT, EN61000-4-5 SURGE

SAFETY：

TO MEET UL, CUL, TUV

E143756

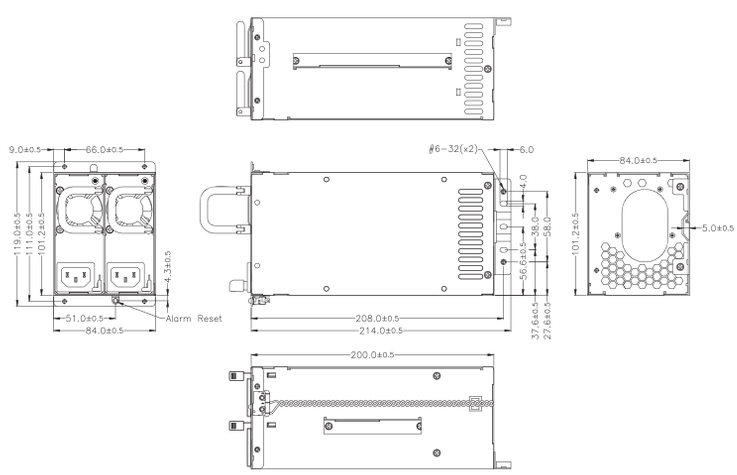

M1W2-5600G0V
M1W2-5700G0V

OUTPUT CHARACTERISTICS

MODEL	WATTAGE	OUTPUT					
		+5V	+12V	+3.3V	-5V	-12V	+5VSB
M1W2-5600G0V	600W	32A	50A	25A	X	0.8A	3A
M1W2-5700G0V	700W	36A	58A	25A	X	0.8A	3A
RIPPLE AND NOISE		50mV	50mV	50mV	X	120mV	50mV

REMARKS：
+5V AND +3.3V TOTAL OUTPUT MAX 170W/190W; TOTAL OUTPUT MAX:600W/700W

INPUT CHARACTERISTICS

VOLTAGE：

90 ~ 264VAC FULL RANGE

FREQUENCY：

47 ~ 63HZ

INPUT CURRENT：

8/4A MAX AT ANY LOW/HIGH INPUT VOLTAGE (600W)

9.5/5A MAX AT ANY LOW/HIGH INPUT VOLTAGE (700W)

INRUSH CURRENT：

60A MAX. FOR 115 VAC PER MODULE ; 80A MAX. FOR 230 VAC PER MODULE

POWER FACTOR CORRECTION：

PFC CAN REACH THE TARGET OF 95% @ 115V AND 90% @230V, FULL LOAD, FOLLOWING THE STANDARD OF IEC 1000-3-2

EMI：

IEC61000-3-2, FCC, CISPR 22(EN 55022)

EMS：

EN 61000-4-2 ESD, EN61000-4-4 EFT, EN61000-4-5 SURGE

SAFETY：

TO MEET UL&CUL, TUV, CCC

E143756

SPECIFICATION：

TEMPERATURE RANGE：OPERATING 0℃ ~ 50℃ · STORAGE -20℃ ~ 80℃

HOLD UP TIME：16mS MIN. AT FULL LOAD & 115 VAC INPUT VOLTAGE (TESTED AT 90% OF MAXIMUM LOAD AND OVER 100-240VAC INPUT)

EFFICIENCY：TYPICAL >86% AT 230V, 20%~100% MAX LOAD

POWER GOOD SIGNAL：ON DELAY 100mS TO 500mS · OFF DELAY 1mS

OUTPUT PROTECTION：OPP / OVP / OCP / SCP

FAULTY ALARM METHODS：LED, BUZZER, TTL SIGNAL

HOT-SWAPPABLE/HOT PLUGGABLE REDUNDANCY FUNCTION

ISOLATION：BUILT-IN THE POWER MODULE

LEAKAGE CURRENT：3.5 mA. MAX. AT NOMINAL VOLTAGE 250VAC

REMOTE ON/OFF CONTROL

DIMENSION：300mm (D) x 101.2mm (W) x 84mm (H)

THE POWER-SUPPLY IS FOR CHASSIS-ASSEMBLY ONLY AND IS NOT ALLOWED TO BE OPERATED AS STAND-ALONE COMPONENT. FINAL ASSEMBLY HAS TO COMPLY WITH CORRESPONDING EMC- AND SAFETY-REGULATIONS.

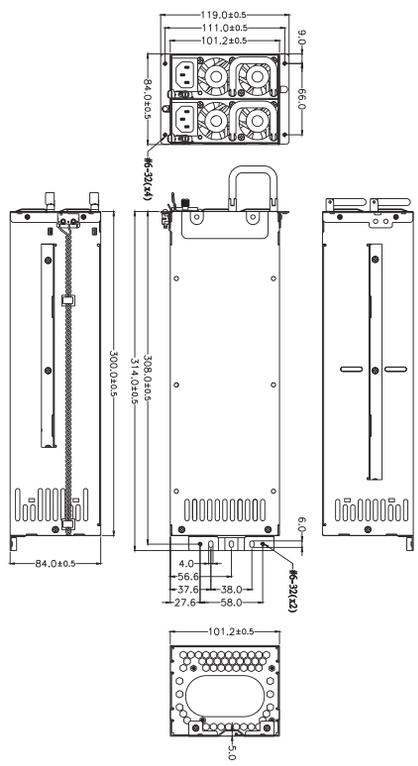

2U REDUNDANT

M1W2-5700K0V

OUTPUT CHARACTERISTICS

MODEL	WATTAGE	OUTPUT					
		+5V	+12V	+3.3V	-5V	-12V	+5VSB
M1W2-5700K0V	700W	36A	58A	25A	X	0.8A	3A
RIPPLE AND NOISE		50mV	50mV	50mV	X	120mV	50mV

REMARKS：
+5V AND +3.3V TOTAL OUTPUT MAX 170W/190W; TOTAL OUTPUT MAX：700W

SPECIFICATION：

TEMPERATURE RANGE：OPERATING 0℃～ 50℃ · STORAGE -20℃～ 80℃

HOLD UP TIME：16mS MIN. AT FULL LOAD & 115 VAC INPUT VOLTAGE (TESTED AT 90% OF MAXIMUM LOAD AND OVER 100-240VAC INPUT)

EFFICIENCY：TYPICAL >86% AT 230V, 20%~100% MAX LOAD

POWER GOOD SIGNAL：ON DELAY 100mS TO 500mS · OFF DELAY 1mS

OUTPUT PROTECTION：OPP / OVP / OCP / SCP

FAULTY ALARM METHODS：LED, BUZZER, TTL SIGNAL

HOT-SWAPPABLE/HOT PLUGGABLE REDUNDANCY FUNCTION

ISOLATION：BUILT-IN THE POWER MODULE

LEAKAGE CURRENT：3.5 mA. MAX. AT NOMINAL VOLTAGE 250VAC

REMOTE ON/OFF CONTROL

DIMENSION：300mm (D) x 101.2mm (W) x 84mm (H)

THE POWER-SUPPLY IS FOR CHASSIS-ASSEMBLY ONLY AND IS NOT ALLOWED TO BE OPERATED AS STAND-ALONE COMPONENT. FINAL ASSEMBLY HAS TO COMPLY WITH CORRESPONDING EMC- AND SAFETY-REGULATIONS.

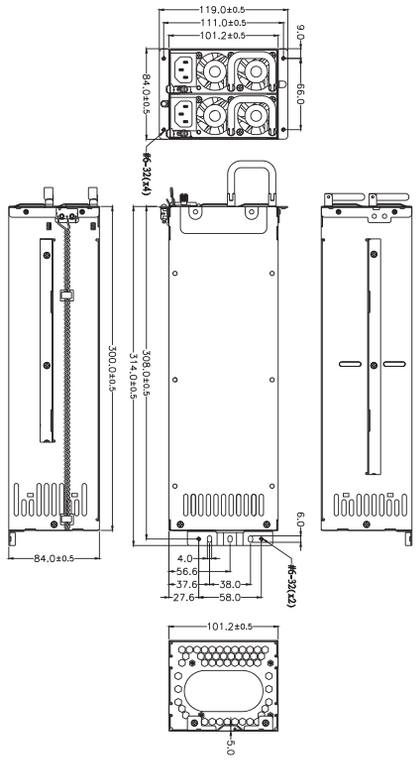

INPUT CHARACTERISTICS

VOLTAGE：

90 ～ 264VAC FULL RANGE

FREQUENCY：

47 ～ 63HZ

INPUT CURRENT：

9.5/5A MAX AT ANY LOW/HIGH INPUT VOLTAGE (700W)

INRUSH CURRENT：

60A MAX. FOR 115 VAC PER MODULE ; 80A MAX. FOR 230 VAC PER MODULE

POWER FACTOR CORRECTION：

PFC CAN REACH THE TARGET OF 95% @ 115V AND 90% @230V, FULL LOAD, FOLLOWING THE STANDARD OF IEC 1000-3-2

EMI：

IEC61000-3-2, FCC, CISPR 22(EN 55022)

EMS：

EN 61000-4-2 ESD, EN61000-4-4 EFT, EN61000-4-5 SURGE

SAFETY：

TO MEET UL&CUL, TUV, CCC

E143756

PMBus Optional

M1W2-5810V3V
M1W2-5910V3V
M1W2-5A10V3V
M1W2-5E00V3V
M1W2-5E01V3V

INPUT CHARACTERISTICS

VOLTAGE :

90V ~ 264VAC (WITH ± 10% TOLERANCE)

FREQUENCY :

47 ~ 63HZ

INPUT CURRENT :

WATTAGE	115V	230V
810W	12A	6A
910W	14A	7A
1010W	15A	7.5A
1400W	15A	10A

INRUSH CURRENT :

15/30 AMPS @ 115/230VAC

POWER FACTOR CORRECTION :

PFC CAN REACH THE TARGET OF 95% AT 115/230VAC, FULL LOAD

EMI :

IEC61000-3-2, FCC, CISPR 22(EN 55022)

EMS :

EN 61000-4-2 ESD, EN61000-4-4 EFT, EN61000-4-5 SURGE

SAFETY :

TO MEET UL, CUL, TUV, CCC

E143756

OUTPUT CHARACTERISTICS

MODEL	WATTAGE	OUTPUT					
		+5V	+12V	+3.3V	-5V	-12V	+5VSB
M1W2-5810V3V	810W	24A	66A	24A	X	1.5A	4A
M1W2-5910V3V	910W	24A	75A	24A	X	1.5A	4A
M1W2-5A10V3V	1010W	24A	83A	24A	X	1.5A	4A
M1W2-5E00V3V	1400W	24A	116A	24A	X	1.5A	4A
M1W2-5E01V3V	1400W	35A	116A	31A	X	0.5A	4A
REGULATION LOAD		±5%	±5%	±5%	X	±5%	±5%
RIPPLE AND NOISE		50mV	120mV	50mV	X	120mV	50mV

REMARKS :
+5V AND +3.3V TOTAL OUTPUT MAX : 135W / 210W

SPECIFICATION :

TEMPERATURE RANGE : OPERATING 0℃ ~50℃ , STORAGE –20℃ ~80℃

EFFICIENCY : TYPICAL 84% AT 115VAC, 86% AT 230V, FULL LOAD (PER SET)

POWER GOOD SIGNAL : ON DELAY 100 mS TO 500 mS

OUTPUT PROTECTION : OPP / OVP / OCP / SCP

WARNING METHOD : LED, BUZZER, TTL SIGNAL

HOT-SWAPPABLE/HOT PLUGGABLE REDUNDANCY FUNCTION

ISOLATION : BUILT-IN THE POWER MODULE

REMOTE SENSING DESIGN

DIMENSION : 300mm (D) x 101.2mm (W) x 84mm (H)
M1W2-5E01V3V : 320mm (D) x 101.2mm (W) x 84mm (H)

THE POWER-SUPPLY IS FOR CHASSIS-ASSEMBLY ONLY AND IS NOT ALLOWED TO BE OPERATED AS STAND-ALONE COMPONENT. FINAL ASSEMBLY HAS TO COMPLY WITH CORRESPONDING EMC- AND SAFETY-REGULATIONS.

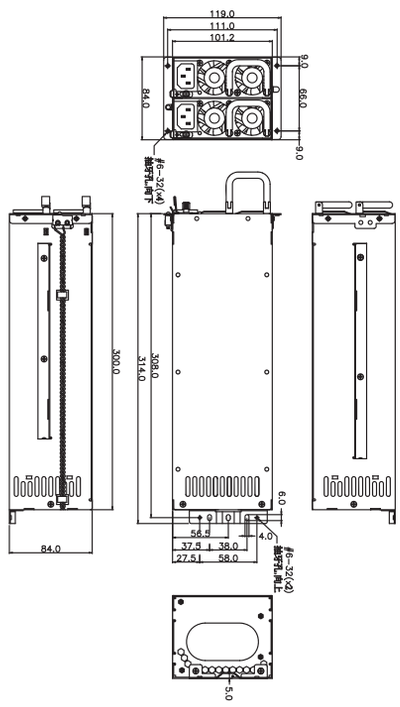

M1W2-5911V3V

OUTPUT CHARACTERISTICS

MODEL	WATTAGE	OUTPUT					
		+5V	+12V	+3.3V	-5V	-12V	+5VSB
M1W2-5911V3V	910W	35A	75A	31A	X	0.5A	4A
REGULATION LOAD		±5%	±5%	±5%	X	±5%	±5%
RIPPLE AND NOISE		50mV	120mV	50mV	X	120mV	50mV

REMARKS :
POWER MODULE TOTAL OUTPUT POWER OF +5V AND +3.3V NOT EXCEED 210W.
POWER MODULE TOTAL OUTPUT POWER NOT EXCEED 910W.

SPECIFICATION :

TEMPERATURE RANGE : OPERATING 0°C ~ 50°C , STORAGE –20°C ~ 80°C

HOLD UP TIME : WHEN POWER SHUTDOWN DC OUTPUT 12V MUST BE MAINTAIN 16MSEC IN REGULATION LIMIT AT 90 VAC INPUT VOLTAGE.

EFFICIENCY : TYPICAL 84% AT 115VAC, 86% AT 230V, FULL LOAD (PER SET)

POWER GOOD SIGNAL : ON DELAY 100 mS TO 500 mS

OUTPUT PROTECTION : OPP / OVP / OCP / SCP

FAULTY ALARM METHODS : LED, BUZZER, TTL SIGNAL

HOT-SWAPPABLE/HOT PLUGGABLE REDUNDANCY FUNCTION

ISOLATION : BUILT-IN THE POWER MODULE

REMOTE SENSING DESIGN

DIMENSION : 320 (D) x 101.2 (W) x 84 (H) mm

THE POWER-SUPPLY IS FOR CHASSIS-ASSEMBLY ONLY AND IS NOT ALLOWED TO BE OPERATED AS STAND-ALONE COMPONENT. FINAL ASSEMBLY HAS TO COMPLY WITH CORRESPONDING EMC- AND SAFETY-REGULATIONS.

INPUT CHARACTERISTICS

VOLTAGE :

90 ~ 264 VAC FULL RANGE.

FREQUENCY :

47 ~ 63HZ

INPUT CURRENT :

14/7 AMPS MAXIMUM AT ANY LOW/HIGH RANGE INPUT VOLTAGE

INRUSH CURRENT :

15/30 AMPS @ 115/230VAC

POWER FACTOR CORRECTION :

PFC CAN REACH THE TARGET OF 95% @ 115V, FULL LOAD, FOLLOWING THE STANDARD OF IEC 61000-3-2

EMI :

IEC61000-3-2, FCC, CISPR 22(EN 55022)

EMS :

EN 61000-4-2 ESD, EN61000-4-4 EFT, EN61000-4-5 SURGE

SAFETY :

TO MEET UL, CUL, TUV

E143756

M1W2-7AG0VFV

OUTPUT CHARACTERISTICS

MODEL	WATTAGE	OUTPUT					
		+5V1 +5V2 +5V3	+12V	+3.3V	-5V	-12V	+5VSB
M1W2-7AG0VFV	1700W	36A 25A 25A	141A	31A	X	0.5A	4A
REGULATION LOAD		±5%	±5%	±5%	X	±10%	±5%
RIPPLE AND NOISE		50mV	120mV	50mV	X	120mV	50mV

REMARKS :
+5V1 AND +3.3V MAX. POWER:210W; +5V2 AND +5V3 MAX. POWER:250W;
1000W AT 90-264
1200W AT 115-264
1700W AT 180-264

SPECIFICATION :

TEMPERATURE RANGE : OPERATING 0℃ ~ 50℃ · STORAGE -20℃ ~ 80℃

HOLD UP TIME : 9mS MIN. AT FULL LOAD & 115 VAC INPUT VOLTAGE (TESTED AT 90% OF MAXIMUM LOAD AND OVER 100-240VAC INPUT)(PER SET)

EFFICIENCY : THE MAXIMUM POWER SUPPLY SYSTEM EFFICIENCY SHALL BE 82%, MEASURED AT NOMINAL INPUT VOLTAGE 115V@ 12V/100A, 5VSB/0.1A. 84%, MEASURED AT NOMINAL INPUT VOLTAGE 230V@ 12V/142A, 5VSB/0.1A.

POWER GOOD SIGNAL : ON DELAY 100mS TO 500mS · OFF DELAY 1mS

OUTPUT PROTECTION : OPP / OVP / OCP / SCP

FAULTY ALARM METHODS : LED, BUZZER, TTL SIGNAL

HOT-SWAPPABLE/HOT PLUGGABLE REDUNDANCY FUNCTION

ISOLATION : BUILT-IN THE POWER MODULE

LEAKAGE CURRENT : 3.5 mA. MAX. AT NOMINAL VOLTAGE 250VAC

REMOTE ON/OFF CONTROL

DIMENSION : 310mm (D) x 101.2mm (W) x 84mm (H)

THE POWER-SUPPLY IS FOR CHASSIS-ASSEMBLY ONLY AND IS NOT ALLOWED TO BE OPERATED AS STAND-ALONE COMPONENT. FINAL ASSEMBLY HAS TO COMPLY WITH CORRESPONDING EMC- AND SAFETY-REGULATIONS.

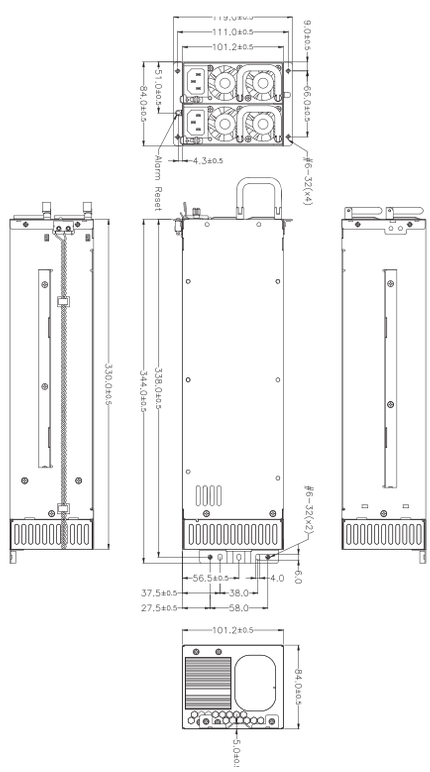

INPUT CHARACTERISTICS

VOLTAGE :

90V ~ 264VAC (WITH ± 10% TOLERANCE)

FREQUENCY :

47 ~ 63HZ

INPUT CURRENT :

15/12A MAX AT ANY LOW/HIGH INPUT VOLTAGE

INRUSH CURRENT :

15A MAX. FOR 115 VAC PER MODULE ; 30A MAX. FOR 230 VAC PER MODULE

POWER FACTOR CORRECTION :

PFC CAN REACH THE TARGET OF 95% @ 115V AND 90% @230V, FULL LOAD, FOLLOWING THE STANDARD OF IEC 1000-3-2

EMI :

IEC61000-3-2, FCC, CISPR 22(EN 55022)

EMS :

EN 61000-4-2 ESD, EN6100-4-4 EFT, EN61000-4-5 SURGE

SAFETY :

UL&CUL, TUV, CCC

E143756

PMBus Optional

80 PLUS SILVER 80 PLUS GOLD

G1W2-5660V3V
G1W2-5760V3V
G1W2-5860V3V
G1W2-5960V3V

OUTPUT CHARACTERISTICS

MODEL	WATTAGE	OUTPUT					
		+5V	+12V	+3.3V	-5V	-12V	+5VSB
G1W2-5660V3V	660W	25A	55A	25A	X	0.8A	3.5A
G1W2-5760V3V	760W	32A	62A	32A	X	0.8A	3.5A
G1W2-5860V3V	860W	32A	70A	32A	X	0.8A	3.5A
G1W2-5960V3V	960W	32A	78A	32A	X	0.8A	3.5A
REGULATION LOAD		±5%	±5%	±5%	X	±5%	±5%
RIPPLE AND NOISE		50mV	120mV	50mV	X	120mV	50mV

REMARKS :
* +5V AND +3.3V TOTAL OUTPUT MAX : 190W

SPECIFICATION :

TEMPERATURE RANGE : OPERATING : 0°C ~40°C , STORAGE : -20°C ~80°C

HOLD UP TIME : 16 ms MINIMUM AT FULL LOAD & NORMAL INPUT VOLTAGE

EFFICIENCY : >80% TYPICAL AT 230 VAC FULL LOAD

POWER GOOD SIGNAL : ON DELAY 100 ms TO 500 ms, OFF DELAY 1 ms

OUTPUT PROTECTION : OPP / OVP / OCP / SCP

WARNING METHOD : LED, BUZZER, TTL SIGNAL

HOT-SWAPPABLE/HOT PLUGGABLE REDUNDANCY FUNCTION

REMOTE SENSING DESIGN

DIMENSION : 300mm (D) x 101.2mm (W) x 84mm (H)

THE POWER-SUPPLY IS FOR CHASSIS-ASSEMBLY ONLY AND IS NOT ALLOWED TO BE OPERATED AS STAND-ALONE COMPONENT. FINAL ASSEMBLY HAS TO COMPLY WITH CORRESPONDING EMC- AND SAFETY-REGULATIONS.

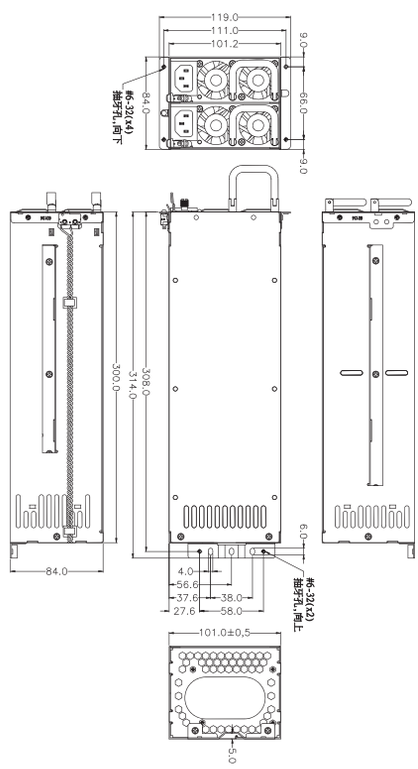

INPUT CHARACTERISTICS

VOLTAGE :

90V ~ 264VAC (WITH ± 10% TOLERANCE)

FREQUENCY :

47 ~ 63HZ

INPUT CURRENT :

WATTAGE	115V	230V
660W	10A	5A
760W	11A	5.5A
880W	13A	6.5A
960W	14A	7A

INRUSH CURRENT :

60/80 AMPS @ 115/230VAC

POWER FACTOR CORRECTION :

PFC CAN REACH THE TARGET OF 95% AT 115/230VAC, FULL LOAD

EMI :

IEC61000-3-2, FCC, CISPR 22(EN 55022)

EMS :

EN 61000-4-2 ESD, EN61000-4-4 EFT, EN61000-4-5 SURGE

SAFETY :

TO MEET UL, CUL, TUV, CCC

E143756

PMBus Optional

G1W2-5760V2V
G1W2-5860V2V
G1W2-5A10V2V
G1W2-5C00V2V

INPUT CHARACTERISTICS

VOLTAGE：

90 ~ 264VAC FULL RANGE

FREQUENCY：

47 ~ 63HZ

INPUT CURRENT：

WATTAGE	115V	230V
760W	11A	5.5A
860W	13A	6.5A
1010W	15A	7A
1200W	15A	7A

INRUSH CURRENT：

40/60 AMPS @ 115/230VAC

POWER FACTOR CORRECTION：

PFC CAN REACH THE TARGET OF 95% @ 115V, FULL LOAD, FOLLOWING THE STANDARD OF IEC 1000-3-2

EMI：

IEC61000-3-2, FCC, CISPR 22(EN 55022)

EMS：

EN 61000-4-2 ESD, EN61000-4-4 EFT, EN61000-4-5 SURGE

SAFETY：

TO MEET UL, CUL, TUV, CCC

E143756

OUTPUT CHARACTERISTICS

MODEL	WATTAGE	OUTPUT					
		+5V	+12V	+3.3V	-5V	-12V	+5VSB
G1W2-5760V2V	760W	32A	62A	32A	X	0.8A	3.5A
G1W2-5860V2V	860W	32A	70A	32A	X	0.8A	3.5A
G1W2-5A10V2V	1010W	32A	83A	32A	X	0.8A	3.5A
G1W2-5C00V2V	1200W	36A	98A	36A	X	0.8A	3.5A
REGULATION LOAD		±5%	±5%	±5%	X	±5%	±5%
RIPPLE AND NOISE		50mV	120mV	50mV	X	120mV	50mV

REMARKS：
* +5V AND +3.3V TOTAL OUTPUT MAX：190W; TOTAL POWER 860W MAX.

SPECIFICATION：

TEMPERATURE RANGE：OPERATING：0℃ ~40℃ , STORAGE：-20℃ ~80℃

HOLD UP TIME：16 ms MINIMUM AT FULL LOAD & NORMAL INPUT VOLTAGE

EFFICIENCY：>85% TYPICAL AT 230 VAC FULL LOAD

POWER GOOD SIGNAL：ON DELAY 100 ms TO 500 ms, OFF DELAY 1 ms

OUTPUT PROTECTION：OPP / OVP / OCP / SCP

FAULTY ALARM METHODS：LED, BUZZER, TTL SIGNAL

HOT-SWAPPABLE/HOT PLUGGABLE REDUNDANCY FUNCTION

ISOLATION：BUILT-IN THE POWER MODULE

REMOTE ON/OFF CONTROL

LEAKAGE CURRENT:INPUT LEAKAGE CURRENT FROM LINE GROUND BE LESS THAN 3.5mA RMS. MEASUREMENT MADE AT 240 VAC AND 60HZ

DIMENSION：300mm (D) x 101.2mm (W) x 84mm (H)

THE POWER-SUPPLY IS FOR CHASSIS-ASSEMBLY ONLY AND IS NOT ALLOWED TO BE OPERATED AS STAND-ALONE COMPONENT. FINAL ASSEMBLY HAS TO COMPLY WITH CORRESPONDING EMC- AND SAFETY-REGULATIONS.

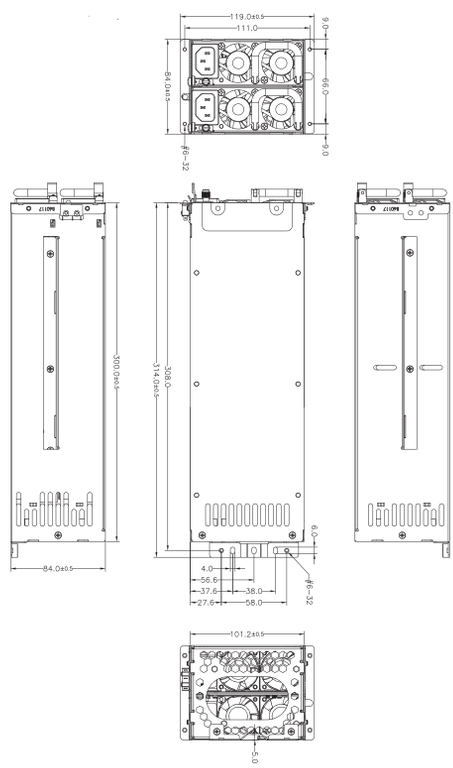

2U REDUNDANT

G1W2-5A10V3V
G1W2-5C00V3V

OUTPUT CHARACTERISTICS

MODEL	WATTAGE	OUTPUT					
		+5V	+12V	+3.3V	-5V	-12V	+5VSB
G1W2-5A10V3V	1010W	32A	83A	32A	X	0.8A	3.5A
G1W2-5C00V3V	1200W	36A	98A	36A	X	0.8A	3.5A
REGULATION LOAD		±5%	±5%	±5%	X	±5%	±5%
RIPPLE AND NOISE		50mV	120mV	50mV	X	120mV	50mV

REMARKS :
+5V AND +3.3V TOTAL OUTPUT MAX : 190W (G1W2-5A10V3V) 210W (G1W2-5C00V3V)
TOTEL OUTPUT MAX. 1010W/1200W

INPUT CHARACTERISTICS

VOLTAGE :

90 ~ 264VAC FULL RANGE
200 ~ 264VAC (OUTPUT : 1200W)

FREQUENCY :

47 ~ 63HZ

INPUT CURRENT :

15/7A MAX AT ANY LOW/HIGH INPUT VOLTAGE

INRUSH CURRENT :

60/80 AMPS @ 115/230VAC

POWER FACTOR CORRECTION :

PFC CAN REACH THE TARGET OF 95% AT 115V, FULL LOAD

EMI :

IEC61000-3-2, FCC, CISPR 22(EN 55022)

EMS :

EN 61000-4-2 ESD, EN61000-4-4 EFT, EN61000-4-5 SURGE

SAFETY :

TO MEET UL, CUL, TUV, CCC

E143756

SPECIFICATION :

TEMPERATURE RANGE : OPERATING : 0℃ ~40℃ , STORAGE : -20℃ ~80℃

HOLD UP TIME : 16 ms MINIMUM AT FULL LOAD & NORMAL INPUT VOLTAGE (G1W2-5A10V3V)
12 ms MINIMUM AT FULL LOAD & NORMAL INPUT VOLTAGE (G1W2-5C00V3V)

EFFICIENCY : >80% TYPICAL AT 230 VAC FULL LOAD

POWER GOOD SIGNAL : ON DELAY 100 ms TO 500 ms, OFF DELAY 1 ms

OUTPUT PROTECTION : OPP / OVP / OCP / SCP

WARNING METHOD : LED, BUZZER, TTL SIGNAL

HOT-SWAPPABLE/HOT PLUGGABLE REDUNDANCY FUNCTION

ISOLATION : BUILT-IN THE POWER MODULE

REMOTE SENSING DESIGN

DIMENSION : 300mm (D) x 101.2mm (W) x 84mm (H)

THE POWER-SUPPLY IS FOR CHASSIS-ASSEMBLY ONLY AND IS NOT ALLOWED TO BE OPERATED AS STAND-ALONE COMPONENT. FINAL ASSEMBLY HAS TO COMPLY WITH CORRESPONDING EMC- AND SAFETY-REGULATIONS.

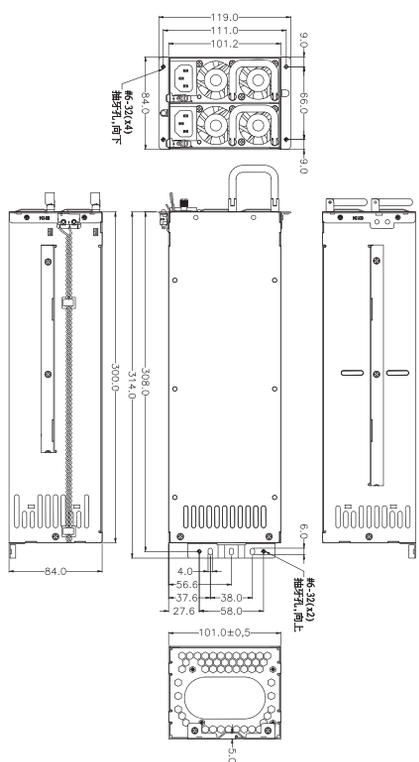

G1W2-5AE0G2V

OUTPUT CHARACTERISTICS

MODEL	WATTAGE	OUTPUT					
		+5V	+12V	+3.3V	-5V	-12V	+5VSB
G1W2-5AE0G2V	1500W	36A	124A	36A	X	0.8A	3.5A
REGULATION LOAD		±5%	±5%	±5%	X	±5%	±5%
RIPPLE AND NOISE		50mV	120mV	50mV	X	120mV	50mV

REMARKS：
* +5V AND +3.3V TOTAL OUTPUT MAX：190W; TOTAL POWER 1500W MAX.
115VAC ONLY：1200W

INPUT CHARACTERISTICS

VOLTAGE：

90 ~ 264VAC FULL RANGE

FREQUENCY：

47 ~ 63HZ

INPUT CURRENT：

15/7.5A MAX AT ANY LOW/HIGH INPUT VOLTAGE

INRUSH CURRENT：

40/60 AMPS @ 115/230VAC

POWER FACTOR CORRECTION：

PFC CAN REACH THE TARGET OF 95% @ 115V, FULL LOAD, FOLLOWING THE STANDARD OF IEC 1000-3-2

EMI：

IEC61000-3-2, FCC, CISPR 22(EN 55022)

EMS：

EN 61000-4-2 ESD, EN61000-4-4 EFT, EN61000-4-5 SURGE

SAFETY：

TO MEET UL, CUL, TUV, CCC

SPECIFICATION：

TEMPERATURE RANGE：OPERATING：0°C ~40°C , STORAGE：-20°C ~80°C

HOLD UP TIME：16 ms MINIMUM AT FULL LOAD & NORMAL INPUT VOLTAGE

EFFICIENCY：>80% TYPICAL AT 230 VAC FULL LOAD

POWER GOOD SIGNAL：ON DELAY 100 ms TO 500 ms, OFF DELAY 1 ms

OUTPUT PROTECTION：OPP / OVP / OCP / SCP

FAULTY ALARM METHODS：LED, BUZZER, TTL SIGNAL

HOT-SWAPPABLE/HOT PLUGGABLE REDUNDANCY FUNCTION

ISOLATION：BUILT-IN THE POWER MODULE

REMOTE SENSING DESIGN

DIMENSION：300mm (D) x 101.2mm (W) x 84mm (H)

THE POWER-SUPPLY IS FOR CHASSIS-ASSEMBLY ONLY AND IS NOT ALLOWED TO BE OPERATED AS STAND-ALONE COMPONENT. FINAL ASSEMBLY HAS TO COMPLY WITH CORRESPONDING EMC- AND SAFETY-REGULATIONS.

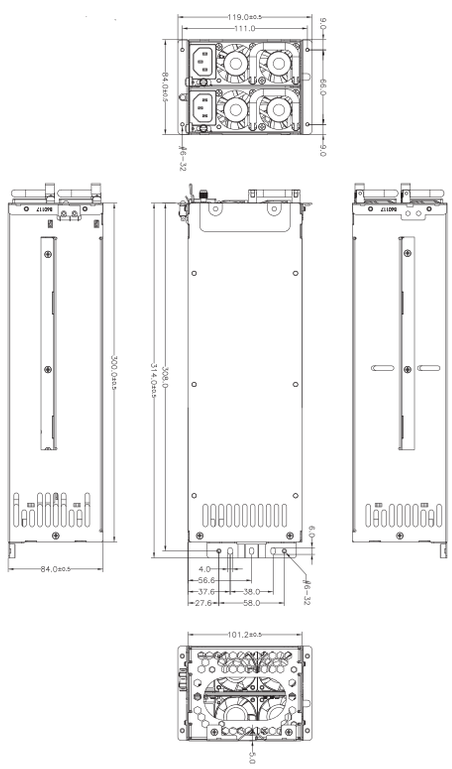

OUTPUT CHARACTERISTICS

MODEL	WATTAGE	OUTPUT					
		+5V	+12V	+3.3V	-5V	-12V	+5VSB
MTW2-5960V2V	960W	32	77	36	X	0.8	3.5
REGULATION LOAD		±5%	±5%	±5%	X	±5%	±5%
RIPPLE AND NOISE		50mV	120mV	50mV	X	120mV	50mV

REMARKS：
+5V AND +3.3V TOTAL OUTPUT MAX：200W; TOTAL OUTPUT MAX：960W

MTW2-5960V2V

SPECIFICATION：

TEMPERATURE RANGE：OPERATING 0℃ ~45℃ , STORAGE -20℃ ~80℃

HOLD UP TIME：16mS IN REGULATOIN LIMIT AT 90VAC INPUT VOLTAGE

EFFICIENCY：TYPICAL >80% AT 25℃ 115VAC FULL LOAD

POWER GOOD SIGNAL：ON DELAY 100mS TO 500mS

OUTPUT PROTECTION：OPP / OVP / OCP / SCP

FAULTY ALARM METHODS：LED, BUZZER, TTL SIGNAL

HOT-SWAPPABLE/HOT PLUGGABLE REDUNDANCY FUNCTION

ISOLATION：BUILT-IN THE POWER MODULE

REMOTE ON/OFF CONTROL

COOLING：TWO 38mm DC FANS (EACH MODULE)

DIMENSION：300mm (D) x 101mm (W) x 84mm (H)

THE POWER-SUPPLY IS FOR CHASSIS-ASSEMBLY ONLY AND IS NOT ALLOWED TO BE OPERATED AS STAND-ALONE COMPONENT. FINAL ASSEMBLY HAS TO COMPLY WITH CORRESPONDING EMC- AND SAFETY-REGULATIONS.

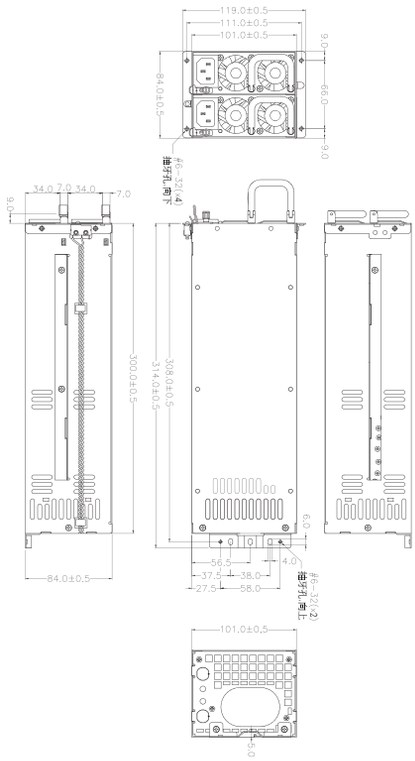

INPUT CHARACTERISTICS

VOLTAGE：

90 ~ 264VAC FULL RANGE

FREQUENCY：

47 ~ 63HZ

INPUT CURRENT：

15/8AMPS MAXIMUM AT ANY LOW/HIGH RANGE INPUT VOLTAGE

INRUSH CURRENT：

40/60 AMPS @ 115/230VAC

POWER FACTOR CORRECTION：

PFC CAN REACH THE TARGET OF 95% @ 115V, FULL LOAD, FOLLOWING THE STANDARD OF IEC 1000-3-2

EMI：

IEC61000-3-2, FCC, CISPR 22(EN 55022)

EMS：

EN 61000-4-2 ESD, EN61000-4-4 EFT, EN61000-4-5 SURGE

SAFETY：

TO MEET UL, CUL, TUV, CCC

E143756

OUTPUT CHARACTERISTICS

MODEL	WATTAGE	OUTPUT					
		+5V	+12V	+3.3V	-5V	-12V	+5VSB
MTW2-5AD0V2V	1400W	50	100	12	X	0.8	3
REGULATION LOAD		±5%	±5%	±5%	X	±5%	±5%
RIPPLE AND NOISE		50mV	120mV	50mV	X	120mV	50mV

REMARKS：
+5V AND +3.3V TOTAL OUTPUT MAX：310W; TOTAL OUTPUT MAX：1400W

MTW2-5AD0B2V

SPECIFICATION：

TEMPERATURE RANGE：OPERATING 0℃ ~50℃ , STORAGE -20℃ ~80℃

HOLD UP TIME：10mS IN REGULATOIN LIMIT AT 90VAC INPUT VOLTAGE

EFFICIENCY：TYPICAL >82% AT 25℃ 230VAC FULL LOAD

POWER GOOD SIGNAL：ON DELAY 100mS TO 500mS

OUTPUT PROTECTION：OPP / OVP / OCP / SCP

FAULTY ALARM METHODS：LED, BUZZER, TTL SIGNAL

HOT-SWAPPABLE/HOT PLUGGABLE REDUNDANCY FUNCTION

ISOLATION：BUILT-IN THE POWER MODULE

REMOTE ON/OFF CONTROL

COOLING：TWO 38mm DC FANS (EACH MODULE)

DIMENSION：300mm (D) x 101mm (W) x 84mm (H)

THE POWER-SUPPLY IS FOR CHASSIS-ASSEMBLY ONLY AND IS NOT ALLOWED TO BE OPERATED AS STAND-ALONE COMPONENT. FINAL ASSEMBLY HAS TO COMPLY WITH CORRESPONDING EMC- AND SAFETY-REGULATIONS.

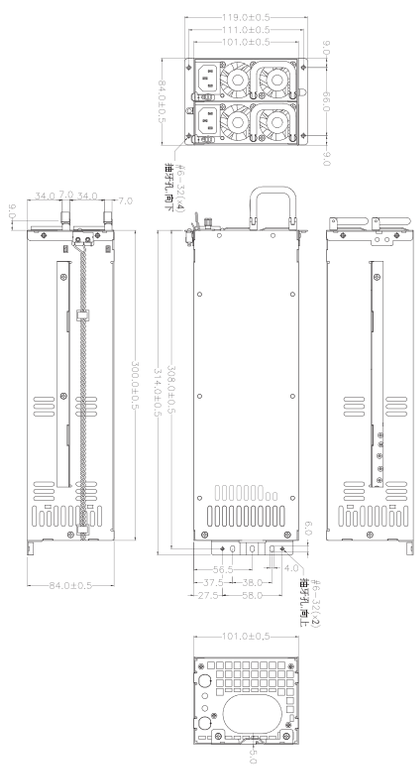

INPUT CHARACTERISTICS

VOLTAGE：

115 ~ 264VAC FULL RANGE (90V ONLY 1000W)

FREQUENCY：

47 ~ 63HZ

INPUT CURRENT：

15/10AMPS MAXIMUM AT ANY LOW/HIGH RANGE INPUT VOLTAGE

INRUSH CURRENT：

40/80 AMPS @ 115/230VAC

POWER FACTOR CORRECTION：

PFC CAN REACH THE TARGET OF 95% @ 115V, FULL LOAD, FOLLOWING THE STANDARD OF IEC 1000-3-2

EMI：

IEC61000-3-2, FCC, CISPR 22(EN 55022)

EMS：

EN 61000-4-2 ESD, EN61000-4-4 EFT, EN61000-4-5 SURGE

SAFETY：

TO MEET UL, CUL, TUV, CCC

E143756

R2K-5800V
R2K-5A00V
R2K-5C00V

INPUT CHARACTERISTICS

VOLTAGE：

100~240±10%VAC(OUTPUT 1000W);
200~240±10%VAC (OUTPUT 1200W)

FREQUENCY：

47 ~ 63HZ

INPUT CURRENT：

WATTAGE	115V	230V
800W	12A	6A
1000W	15A	7A
1200W	X	9A

INRUSH CURRENT：

WATTAGE	115V	230V
800W	18A	36A
1000W	25A	50A
1200W	X	50A

POWER FACTOR CORRECTION：

PFC CAN REACH THE TARGET OF 95% AT
115/230VAC, FULL LOAD

EMI：

IEC61000-3-2, FCC, CISPR 22(EN 55022)

EMS：

EN 61000-4-2 ESD, EN61000-4-4 EFT, EN61000-4-5 SURGE

SAFETY：

TO MEET UL&CUL, TUV, CCC

E143756

OUTPUT CHARACTERISTICS

MODEL	WATTAGE	OUTPUT					
		+5V	+12V	+3.3V	-5V	-12V	+5VSB
R2K-5800V4V	800W	32A	65A	32A	X	0.5A	3.5A
R2K-5A00V4V	1000W	32A	83A	32A	X	0.5A	3.5A
R2K-5C00V4V	1200W	32A	100A	32A	X	0.5A	3.5A
REGULATION LOAD		±5%	±5%	±5%	X	±5%	±5%
RIPPLE AND NOISE		50mV	120mV	50mV	X	120mV	50mV

REMARKS：
+5V AND +3.3V TOTAL OUTPUT 190W

SPECIFICATION：

TEMPERATURE RANGE：OPERATING 0°C ~40°C ,STORAGE -20°C ~80°C

HOLD UP TIME：POWER SHUTDOWN DC OUTPUT 5V MUST BE MAINTAIN 16mSEC IN REGULATION LITMIT AT NORMAL INPUT VOLTAGE

EFFICIENCY： TYPICAL 86% MAX @ 230V (ANY DIFFERENCE EITHER ON THE DC OUTPUT CABLE(I.E., LENGTH, WIRE GAUGE) OR ON THE ACCURATE OF INSTRUMENTS WILL CONCLUDE DIFFERENT TEST RESULT.

POWER GOOD SIGNAL： ON DELAY 100 ms TO 500 ms, OFF DELAY 1 ms

OUTPUT PROTECTION：OPP / OVP / OCP / SCP

WARNING METHOD： LED, BUZZER, TTL SIGNAL

HOT-SWAPPABLE/HOT PLUGGABLE REDUNDANCY FUNCTION

LEAKAGE CURRENT 3.5mA MAX. AT NOMINAL VOLTAGE 250VAC

REMOTE ON/OFF CONTROL

DIMENSION：340mm (D) x 101mm (W) x 82mm (H)

THE POWER-SUPPLY IS FOR CHASSIS-ASSEMBLY ONLY AND IS NOT ALLOWED TO BE OPERATED AS STAND-ALONE COMPONENT. FINAL ASSEMBLY HAS TO COMPLY WITH CORRESPONDING EMC- AND SAFETY-REGULATIONS.

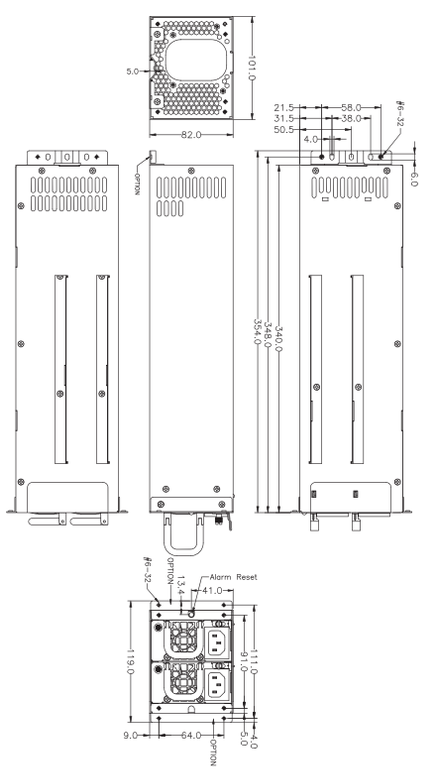

R2K-5800V4D

OUTPUT CHARACTERISTICS

MODEL	WATTAGE	OUTPUT					
		+5V	+12V	+3.3V	-5V	-12V	+5VSB
R2K-5800V4D	800W	32A	65A	32A	X	0.5A	3.5A
REGULATION LOAD		±5%	±5%	±5%	X	±5%	±5%
RIPPLE AND NOISE		50mV	120mV	50mV	X	120mV	50mV

REMARK：
+5V AND +3.3V TOTAL OUTPUT 190W

INPUT CHARACTERISTICS

VOLTAGE：

90 ~ 264VAC FULL RANGE

FREQUENCY：

47~63HZ

INPUT CURRENT：

WATTAGE	115V	230V
800W	12A	6A

INRUSH CURRENT：

WATTAGE	115V	230V
800W	18A	36A

POWER FACTOR CORRECTION：

PFC CAN REACH THE TARGET OF 95% @ 230V, FULL LOAD, FOLLOWING THE STANDARD OF IEC 61000-3-2

EMI：

IEC61000-3-2, FCC, CISPR 22(EN 55022)

EMS：

EN 61000-4-2 ESD, EN61000-4-4 EFT, EN61000-4-5 SURGE

SAFETY：

TO MEET, UL, CUL, TUV, CCC

E143756

SPECIFICATION：

TEMPERATURE RANGE：OPERATING 0℃ ~ 40℃ ,STORAGE -20℃ ~ 80℃

HOLD UP TIME：POWER SHUTDOWN DC OUTPUT 5V MUST BE MAINTAIN 16mSEC IN REGULATION LITMIT AT NORMAL INPUT VOLTAGE

EFFICIENCY：TYPICAL 86% MAX @ 230V (ANY DIFFERENCE EITHER ON THE DC OUTPUT CABLE(I.E., LENGTH, WIRE GAUGE) OR ON THE ACCURATE OF INSTRUMENTS WILL CONCLUDE DIFFERENT TEST RESULT.

POWER GOOD SIGNAL：ON DELAY 100 ms TO 500 ms, OFF DELAY 1 ms

OUTPUT PROTECTION：OPP / OVP / OCP / SCP

FAULTY ALARM METHODS：LED, BUZZER, TTL SIGNAL

HOT-SWAPPABLE/HOT PLUGGABLE REDUNDANCY FUNCTION

LEAKAGE CURRENT：3.5mA. MAX. AT NOMINAL VOLTAGE 250VAC

REMOTE ON/OFF CONTROL

DIMENSION：397mm (D) x 101mm (W) x 82mm (H)

THE POWER-SUPPLY IS FOR CHASSIS-ASSEMBLY ONLY AND IS NOT ALLOWED TO BE OPERATED AS STAND-ALONE COMPONENT. FINAL ASSEMBLY HAS TO COMPLY WITH CORRESPONDING EMC- AND SAFETY-REGULATIONS

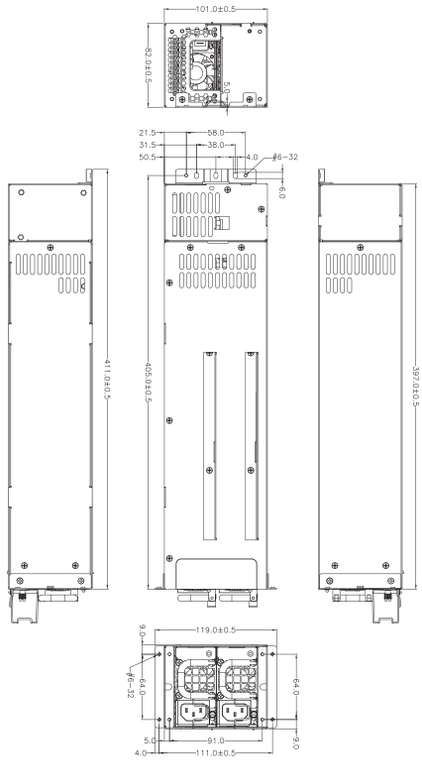

2U REDUNDANT

PMBus Optional

80 PLUS GOLD

PRP-5560G0V

OUTPUT CHARACTERISTICS

MODEL	WATTAGE	OUTPUT					
		+5V	+12V	+3.3V	-5V	-12V	+5VSB
PRP-5560G0V	560W	20A	46A	20A	X	0.5A	3.5A
REGULATION LOAD		±5%	±5%	±5%	X	±5%	±5%
RIPPLE AND NOISE		50mV	120mV	50mV	X	120mV	50mV

REMARK：
+5V AND +3.3V TOTAL OUTPUT 140W

SPECIFICATION：

TEMPERATURE RANGE：OPERATING 0℃ ~ 40℃ ,STORAGE -20℃ ~ 80℃

HOLD UP TIME：POWER SHUTDOWN DC OUTPUT 5V MUST BE MAINTAIN 13mSEC IN REGULATION LITMIT AT NORMAL INPUT VOLTAGE

EFFICIENCY：TYPICAL 86% MAX @ 230V (ANY DIFFERENCE EITHER ON THE DC OUTPUT CABLE(I.E., LENGTH, WIRE GAUGE) OR ON THE ACCURATE OF INSTRUMENTS WILL CONCLUDE DIFFERENT TEST RESULT.

OUTPUT PROTECTION：OPP / OVP / OCP / SCP

FAULTY ALARM METHODS：LED, BUZZER, TTL SIGNAL

HOT-SWAPPABLE/HOT PLUGGABLE REDUNDANCY FUNCTION

LEAKAGE CURRENT：3.5mA. MAX. AT NOMINAL VOLTAGE 250VAC

REMOTE ON/OFF CONTROL

DIMENSION：217mm (D) x 85mm (W) x 84mm (H)

THE POWER-SUPPLY IS FOR CHASSIS-ASSEMBLY ONLY AND IS NOT ALLOWED TO BE OPERATED AS STAND-ALONE COMPONENT. FINAL ASSEMBLY HAS TO COMPLY WITH CORRESPONDING EMC- AND SAFETY-REGULATIONS

INPUT CHARACTERISTICS

VOLTAGE：

90 ~ 264VAC FULL RANGE

FREQUENCY：

47~63HZ

INPUT CURRENT：

WATTAGE	115V	230V
560W	8.5A	4.5A

INRUSH CURRENT：

WATTAGE	115V	230V
560W	35A	80A

POWER FACTOR CORRECTION：

PFC CAN REACH THE TARGET OF 95% @ 230V, FULL LOAD, FOLLOWING THE STANDARD OF IEC 61000-3-2

EMI：

IEC61000-3-2, FCC, CISPR 22(EN 55022)

EMS：

EN 61000-4-2 ESD, EN61000-4-4 EFT, EN61000-4-5 SURGE

SAFETY：

TO MEET, UL, CUL, TUV, CCC

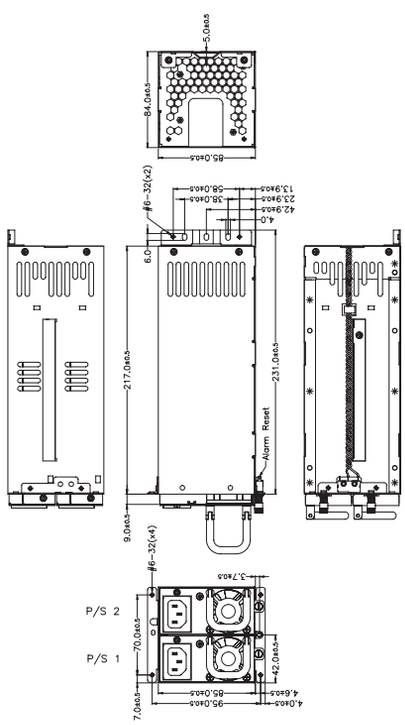

E143756

S1Z2-5800K2V
S1Z2-5700K2V
S1Z2-5600K2V

INPUT CHARACTERISTICS

VOLTAGE：

90 ~ 264VAC FULL RANGE

INPUT CURRENT：

WATTAGE	115V	230V
600W	11	5.5
700W	11	5.5
800W	12	6

INRUSH CURRENT：

15A MAX. FOR 115 VAC PER MODULE ; 30A MAX. FOR 230 VAC PER MODULE

POWER FACTOR CORRECTION：

PFC CAN UP TO THE TARGET OF 95% @230V, FULL LOAD, FOLLOWING THE STANDARD OF EN 61000-3-2

EMI：

IEC61000-3-2, FCC, CISPR 22(EN 55022)

EMS：

EN 61000-4-2 ESD, EN6100-4-4 EFT, EN61000-4-5 SURGE

SAFETY：

UL&CUL, TUV, CCC

OUTPUT CHARACTERISTICS

MODEL	WATTAGE	OUTPUT					
		+5V	+12V	+3.3V	-5V	-12V	+5VSB
S1Z2-5800K2V	800W	36A	66A	31A	X	0.5A	3A
S1Z2-5700K2V	700W	36A	58A	31A	X	0.5A	3A
S1Z2-5600K2V	600W	36A	50A	31A	X	0.5A	3A
REGULATION LOAD		±5%	±5%	±5%	X	±5%	±5%
RIPPLE AND NOISE		50mV	120mV	50mV	X	120mV	50mV

REMARKS：
+5V AND +3.3V MAX. POWER: 210W

SPECIFICATION：

TEMPERATURE RANGE：OPERATING 0℃ ~ 50℃ · STORAGE -20℃ ~ 80℃

HOLD UP TIME：10mS MIN. AT FULL LOAD (TESTED AT 80% OF MAXIMUM LOAD

EFFICIENCY：THE MAXIMUM POWER SUPPLY SYSTEM EFFICIENCY SHALL BE 88%, MEASURED AT NOMINAL INPUT VOLTAGE 230V@ FULL LOAD.

OUTPUT PROTECTION：OPP / OVP / OCP / SCP

FAULTY ALARM METHODS：LED, BUZZER, TTL SIGNAL

HOT-SWAPPABLE/HOT PLUGGABLE REDUNDANCY FUNCTION

ISOLATION：BUILT-IN THE POWER MODULE

LEAKAGE CURRENT：INPUT LEAKAGE CURRENT FROM LINE TO GROUND WILL BE LESS THAN 3.5mA RMS. MEASUREMENT WILL BE MADE AT 240 VAC AND 60HZ.

REMOTE ON/OFF CONTROL

DIMENSION：240mm (D) x 85mm (W) x 83mm (H)

THE POWER-SUPPLY IS FOR CHASSIS-ASSEMBLY ONLY AND IS NOT ALLOWED TO BE OPERATED AS STAND-ALONE COMPONENT. FINAL ASSEMBLY HAS TO COMPLY WITH CORRESPONDING EMC- AND SAFETY-REGULATIONS.

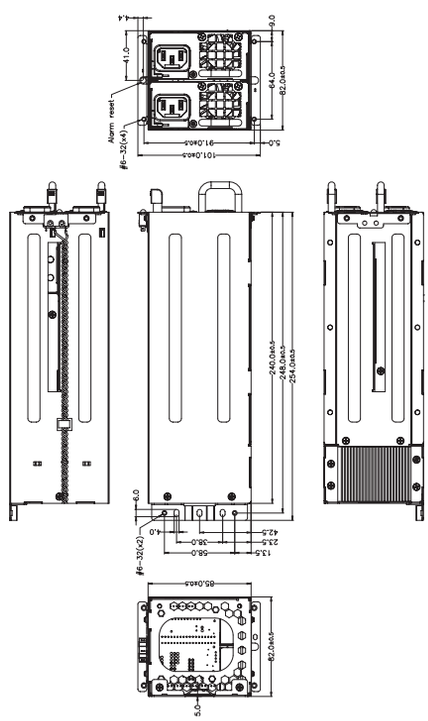

MRT-5320G0V
MRT-5450G0V

OUTPUT CHARACTERISTICS

MODEL	WATTAGE	OUTPUT					
		+5V	+12V	+3.3V	-5V	-12V	+5VSB
MRT-5320G0V	320W	25A	26A	20A	X	0.5A	3A
MRT-5450G0V	450W	25A	37A	20A	X	0.5A	3A
REGULATION LOAD		±5%	±7%	±5%	X	±10%	±5%
RIPPLE AND NOISE		50mV	120mV	50mV	X	120mV	50mV

REMARKS：
+5V AND +3.3V TOTAL OUTPUT CURRENT：150W
TOTAL POWER：320W/450W

SPECIFICATION：

TEMPERATURE RANGE ：OPERATING 0℃ ~ 50℃ , STORAGE –20℃ ~ 80℃

HOLD UP TIME：16 ms MINIMUM AT FULL LOAD & 90 VAC INPUT VOLTAGE

EFFICIENCY：THE MAXIMUM POWER SUPPLY SYSTEM EFFICIENCY SHALL BE 87.8%, MEASURED AT NOMINAL INPUT VOLTAGE 230 V AND FULL LOADING.

POWER GOOD SIGNAL：ON DELAY 100 ms TO 500 ms, OFF DELAY 1 ms

OUTPUT PROTECTION：OPP / OVP / OCP / SCP

FAULTY ALARM METHODS：LED, BUZZER, TTL SIGNAL

HOT-SWAPPABLE / HOT-PLUGGABLE REDUNDANCY FUNCTION

BALANCE LOAD SHARING DESIGN

REMOTE ON/OFF CONTROL

LEAKAGE CURRENT：3.5mA. RMS. MEASUREMENT WILL BE MADE AT 240VAC AND 60HZ.

ISOLATION：BUILT-IN IN THE POWER MODULE

DIMENSION：185mm (D) x 150mm (W) x 86mm (H)

THE POWER-SUPPLY IS FOR CHASSIS-ASSEMBLY ONLY AND IS NOT ALLOWED TO BE OPERATED AS STAND-ALONE COMPONENT. FINAL ASSEMBLY HAS TO COMPLY WITH CORRESPONDING EMC- AND SAFETY-REGULATIONS.

INPUT CHARACTERISTICS

VOLTAGE：

90 ~ 264VAC FULL RANGE

FREQUENCY：

47 ~ 63HZ

INPUT CURRENT：

5/3A @115/230VAC (320W)

7/3A @115/230VAC (450W)

INRUSH CURRENT：

25 / 50A @ 115 / 230 VAC

POWER FACTOR CORRECTION：

PFC CAN REACH THE TARGET OF 95% @ 115V, FULL LOAD, FOLLOWING THE STANDARD OF IEC 1000-3-2

EMI：

IEC61000-3-2, FCC, CISPR 22(EN 55022)

EMS：

EN 61000-4-2 ESD, EN61000-4-4 EFT, EN61000-4-5 SURGE

SAFETY：

TO MEET UL&CUL, TUV, CCC

E143756

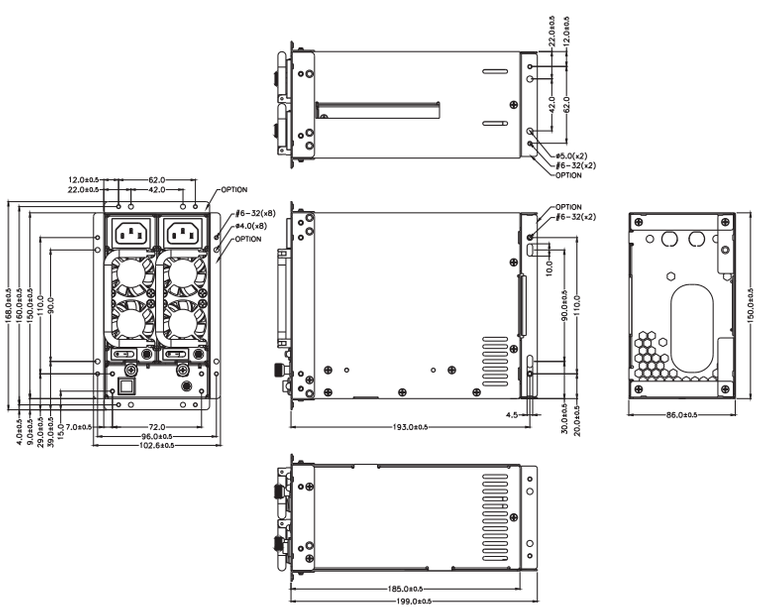

MRW-5450V4V
MRW-5500V4V
MRW-5600V4V

INPUT CHARACTERISTICS

VOLTAGE :

90 ~ 264VAC FULL RANGE

FREQUENCY :

47 ~ 63HZ

INPUT CURRENT :

WATTAGE	110V	220V
450W	7A	3A
500W	8A	4A
600W	9A	4A

INRUSH CURRENT :

25 / 50 AMPS @ 110 / 220 VAC

POWER FACTOR CORRECTION :

PFC CAN REACH THE TARGET OF 95% AT 115/230VAC, FULL LOAD

EMI :

IEC61000-3-2, FCC, CISPR 22(EN 55022)

EMS :

EN 61000-4-2 ESD, EN61000-4-4 EFT, EN61000-4-5 SURGE

SAFETY :

TO MEET UL&CUL, TUV, CCC

E143756

OUTPUT CHARACTERISTICS

MODEL	WATTAGE	OUTPUT					
		+5V	+12V	+3.3V	-5V	-12V	+5VSB
MRW-5450V4V	450W	25A	37A	25A	X	0.8A	3.5A
MRW-5500V4V	500W	25A	41A	25A	X	0.8A	3.5A
MRW-5600V4V	600W	25A	49A	25A	X	0.8A	3.5A
REGULATION LOAD		±5%	±5%	±5%	X	±5%	±5%
RIPPLE AND NOISE		50mV	120mV	50mV	X	120mV	50mV

REMARKS :
+5V AND +3.3V TOTAL MAX. POWER : 170W

SPECIFICATION :

TEMPERATURE RANGE : OPERATING 0°C ~50°C ; STORAGE TEMPERATURE : -20°C ~ 80°C

HOLD UP TIME : 16mS MINIMUM AT NOMINAL INPUT VOLTAGE

EFFICIENCY : TYPICAL >80% @ 115V, 25%~100% MAX LOAD

LEAKAGE CURRENT : 3.5mA MAX. AT NOMINAL VOLTAGE 250VAC

POWER GOOD SIGNAL : ON DELAY 100 ms TO 500 ms, OFF DELAY 1 ms

OUTPUT PROTECTION : OPP / OVP / OVP / SCP

HOT-SWAPPABLE / HOT-PLUGGABLE REDUNDANCY FUNCTION

I2C FEATURES (OPTIONAL)

DIMENSION : 185mm (D) x 150mm (W) x 86mm (H)

THE POWER-SUPPLY IS FOR CHASSIS-ASSEMBLY ONLY AND IS NOT ALLOWED TO BE OPERATED AS STAND-ALONE COMPONENT. FINAL ASSEMBLY HAS TO COMPLY WITH CORRESPONDING EMC- AND SAFETY-REGULATIONS.

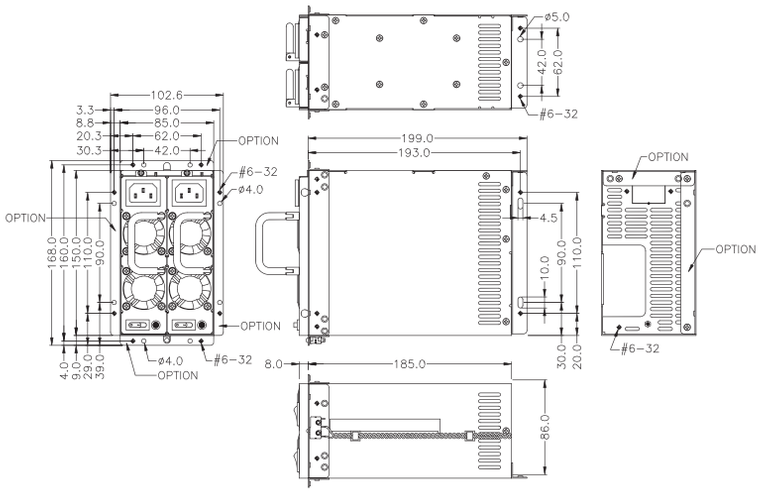

MINI REDUNDANT

OUTPUT CHARACTERISTICS

MODEL	WATTAGE	OUTPUT					
		+5V	+12V	+3.3V	-5V	-12V	+5VSB
MRG-5700V4V	700W	32A	57A	32A	X	0.8A	3.5A
MRG-5800V4V	800W	32A	65A	32A	X	X	3.5A
REGULATION LOAD		±5%	±5%	±5%	X	±5%	±5%
RIPPLE AND NOISE		50mV	120mV	50mV	100mV	50mV	50mV

REMARKS：
TOTAL OUTPUT OF +5V & +3.3V NOT EXCEED 190W

MRG-5700V4V
MRG-5800V4V

SPECIFICATION：

TEMPERATURE RANGE： OPERATING 0℃ ~40℃ , STORAGE –20℃ ~80℃

HOLD UP TIME：DC OUTPUT 12V MUST BE MAINTAIN 16 ms IN REGULATION LIMIT AT NORMAL INPUT VOLTAGE

EFFICIENCY：TYPICAL >80% AT 115V, 25%~100% MAX LOAD

POWER GOOD SIGNAL：ON DELAY 100 ms TO 500 ms, OFF DELAY 1 ms

OUTPUT PROTECTION：OPP / OVP / OCP / SCP

FAULTY ALARM METHODS：LED, BUZZER, TTL SIGNAL

HOT-SWAPPABLE / HOT-PLUGGABLE REDUNDANCY FUNCTION

REMOTE ON/OFF CONTROL

DIMENSION：200mm (D) x 150mm (W) x 86mm (H)

THE POWER-SUPPLY IS FOR CHASSIS-ASSEMBLY ONLY AND IS NOT ALLOWED TO BE OPERATED AS STAND-ALONE COMPONENT. FINAL ASSEMBLY HAS TO COMPLY WITH CORRESPONDING EMC- AND SAFETY-REGULATIONS.

INPUT CHARACTERISTICS

VOLTAGE：

90 ~ 264VAC FULL RANGE

FREQUENCY：

47 ~ 63HZ

INPUT CURRENT：

WATTAGE	110V	220V
700W	9A	5A
800W	11A	5A

INRUSH CURRENT：

35/40A @ 115V; 75/80A @230 VAC

POWER FACTOR CORRECTION：

PFC CAN REACH THE TARGET OF 95% AT 115/230VAC, FULL LOAD

EMI：

IEC61000-3-2, FCC, CISPR 22(EN 55022)

EMS：

EN 61000-4-2 ESD, EN61000-4-4 EFT, EN61000-4-5 SURGE

SAFETY：

TO MEET UL&CUL, TUV, CCC

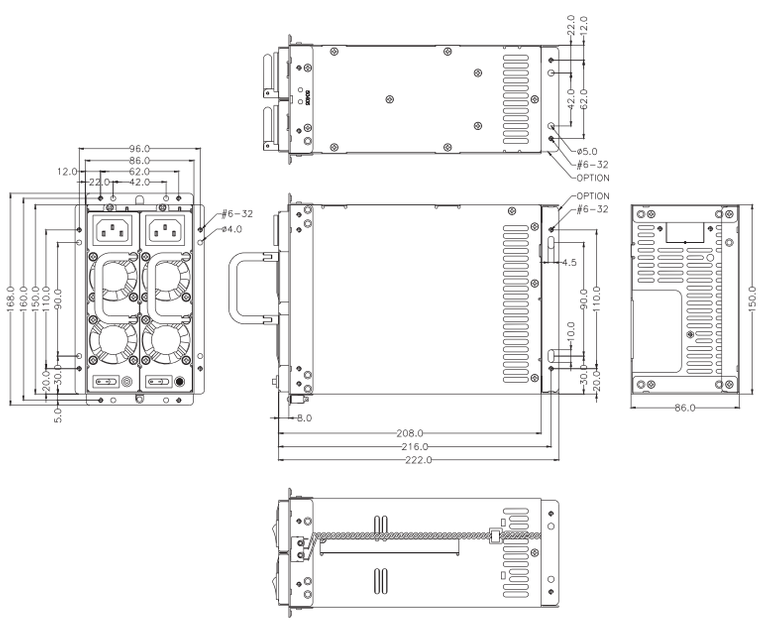

E143756

PMBus Optional

MRH2-5930V0H
MRH2-5AD0V0H

OUTPUT CHARACTERISTICS

MODEL	WATTAGE	OUTPUT					
		+5V	+12V	+3.3V	-5V	-12V	+5VSB
MRH2-5930V0H	930W	36A	77.5A	31A	X	0.5A	3A
MRH2-5AD0V0H	1400W	36A	116A	31A	X	0.5A	3A
REGULATION LOAD		±5%	±5%	±5%	X	±5%	±5%
RIPPLE AND NOISE		50mV	120mV	50mV	X	120mV	50mV

REMARKS：
* TOTAL MAX OUTPUT OF +5V AND +3.3V NOT EXCEED 210W
* POWER MODULE TOTAL OUTPUT POWER NOT EXCEED 1400W FOR 180~264VAC
* POWER MODULE TOTAL OUTPUT POWER NOT EXCEED 1200W FOR 103~132VAC

SPECIFICATION：

TEMPERATURE RANGE：OPERATING 0°C ~ 50°C ; STORAGE：-20°C ~ 80°C

HOLD UP TIME：12mS MINIMUM AT NOMINAL INPUT VOLTAGE (930W); TEST AT 1000W OUTPUT AND INPUT >115VAC 17mS (1400W)

EFFICIENCY：TYPICAL 82% @ 115V, TYPICAL 84% @ 230V (930W)
TYPICAL 84% @ 115V, TYPICAL 86% @ 230V (1400W)

LEAKAGE CURRENT：3.5 mA. MAX. AT NOMINAL VOLTAGE 240VAC

POWER GOOD SIGNAL：ON DELAY 100 ms TO 500 ms

OUTPUT PROTECTION：OPP / OVP / OVP / SCP

REMOTE ON/OFF CONTROL

DIMENSION：280mm (D) x 150mm (W) x 86mm (H)

THE POWER-SUPPLY IS FOR CHASSIS-ASSEMBLY ONLY AND IS NOT ALLOWED TO BE OPERATED AS STAND-ALONE COMPONENT. FINAL ASSEMBLY HAS TO COMPLY WITH CORRESPONDING EMC- AND SAFETY-REGULATIONS.

INPUT CHARACTERISTICS

VOLTAGE：

90~264 VAC FULL RANGE (930W)
180 ~ 264 VAC (1400W)
90 ~ 132 VAC FULL RANGE (1200W)

FREQUENCY：

47 ~ 63HZ

INPUT CURRENT：

WATTAGE	115V	230V
930W	14	7
1200W/1400W	15	10

INRUSH CURRENT：

15/30 AMPS @115/230VAC

POWER FACTOR CORRECTION：

PFC CAN REACH THE TARGET OF 95% @ 110V, FULL LOAD, FOLLOWING THE STANDARD OF IEC 1000-3-2

EMI：

IEC61000-3-2, FCC, CISPR 22(EN 55022)

EMS：

EN 61000-4-2 ESD, EN61000-4-4 EFT, EN61000-4-5 SURGE

SAFETY：

TO MEET UL&CUL, TUV, CCC

c UL us
E143756

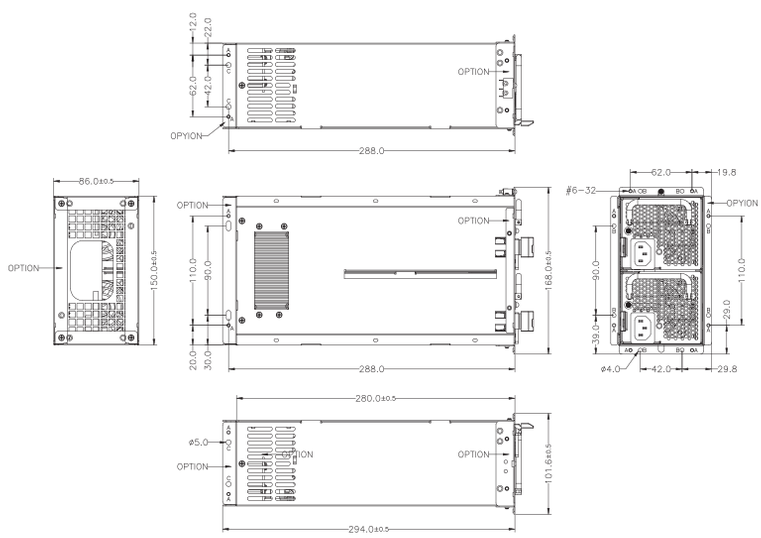

MINI REDUNDANT

M1Z3-5950V3V
M1Z3-5A45V3V

OUTPUT CHARACTERISTICS

MODEL	WATTAGE	OUTPUT					
		+5V	+12V	+3.3V	-5V	-12V	+5VSB
M1Z3-5950V3V	950W	43A	76A	43A	X	1A	5A
M1Z3-5A45V3V	1045W	43A	84A	43A	X	1A	5A
REGULATION LOAD		±5%	±5%	±5%	X	±5%	±5%
RIPPLE AND NOISE		70mV	120mV	70mV	X	120mV	70mV

SPECIFICATION：

TEMPERATURE RANGE：OPERATING 0℃ ~50℃ , STORAGE –20℃ ~80℃

HOLD UP TIME：16 ms MINIMUM AT FULL LOAD & NORMAL INPUT VOLTAGE

EFFICIENCY：78% TYPICAL @ FULL LOAD

POWER GOOD SIGNAL：ON DELAY 100 ms TO 500 ms, OFF DELAY 1 ms

OUTPUT PROTECTION：OPP / OVP / OCP / SCP

REMOTE ON/OFF CONTROL

WARNING METHOD：BUZZER, TTL

DIMENSION：265mm (D) x 101.2mm (W) x 125mm (H)

THE POWER-SUPPLY IS FOR CHASSIS-ASSEMBLY ONLY AND IS NOT ALLOWED TO BE OPERATED AS STAND-ALONE COMPONENT. FINAL ASSEMBLY HAS TO COMPLY WITH CORRESPONDING EMC- AND SAFETY-REGULATIONS.

INPUT CHARACTERISTICS

VOLTAGE：

90 ~ 264 VAC FULL RANGE.

FREQUENCY：

47 ~ 63HZ

INPUT CURRENT：

6A/6A (RMS) FOR 230 VAC, 15A/16A (RMS) FOR 115 VAC

INRUSH CURRENT：

35A MAX. FOR 115 VAC PER MODULE, 40A MAX. FOR 230 VAC PER MODULE

POWER FACTOR CORRECTION：

PFC CAN REACH THE TARGET OF 95% AT 115/230VAC, FULL LOAD

EMI：

IEC61000-3-2, FCC, CISPR 22(EN 55022)

EMS：

EN 61000-4-2 ESD, EN61000-4-4 EFT, EN61000-4-5 SURGE

SAFETY：

TO MEET UL&CUL, TUV, CCC

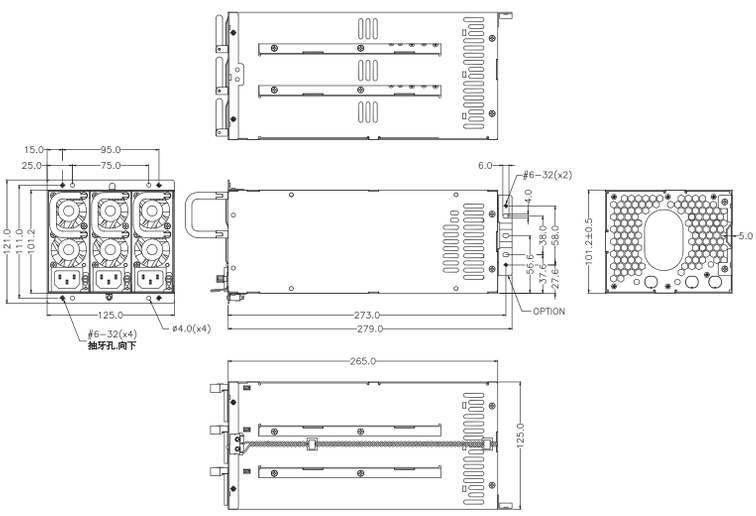

E143756

N+1 REDUNDANT

OUTPUT CHARACTERISTICS

MODEL	WATTAGE	OUTPUT					
		+5V	+12V	+3.3V	-5V	-12V	+5VSB
M1Z3-5950V3H	950W	43A	76A	43A	X	1A	5A
REGULATION LOAD		±5%	±5%	±5%	X	±5%	±5%
RIPPLE AND NOISE		70mV	120mV	70mV	X	120mV	70mV

M1Z3-5950V3H

SPECIFICATION：

TEMPERATURE RANGE：OPERATING 0℃ ~50℃ , STORAGE –20℃ ~80℃

HOLD UP TIME：16 ms MINIMUM AT FULL LOAD & NORMAL INPUT VOLTAGE

EFFICIENCY：78% TYPICAL @ FULL LOAD

REMOTE ON/OFF CONTROL

POWER GOOD SIGNAL：ON DELAY 100 ms TO 500 ms, OFF DELAY 1 ms

WARNING METHOD：BUZZER, TTL

DIMENSION：310mm (D) x 331mm (W) x 43mm (H)

THE POWER-SUPPLY IS FOR CHASSIS-ASSEMBLY ONLY AND IS NOT ALLOWED TO BE OPERATED AS STAND-ALONE COMPONENT. FINAL ASSEMBLY HAS TO COMPLY WITH CORRESPONDING EMC- AND SAFETY-REGULATIONS.

INPUT CHARACTERISTICS

VOLTAGE：

90 ~ 264 VAC FULL RANGE.

FREQUENCY：

47 ~ 63HZ

INPUT CURRENT：

6A (RMS) FOR 230 VAC, 15A (RMS) FOR 115 VAC

INRUSH CURRENT：

35A MAX. FOR 115 VAC PER MODULE, 40A MAX. FOR 230 VAC PER MODULE

POWER FACTOR CORRECTION：

PFC CAN REACH THE TARGET OF 95% AT 115/230VAC, FULL LOAD

EMI：

IEC61000-3-2, FCC, CISPR 22(EN 55022)

EMS：

EN 61000-4-2 ESD, EN61000-4-4 EFT, EN61000-4-5 SURGE

SAFETY：

TO MEET UL&CUL, TUV, CCC

E143756

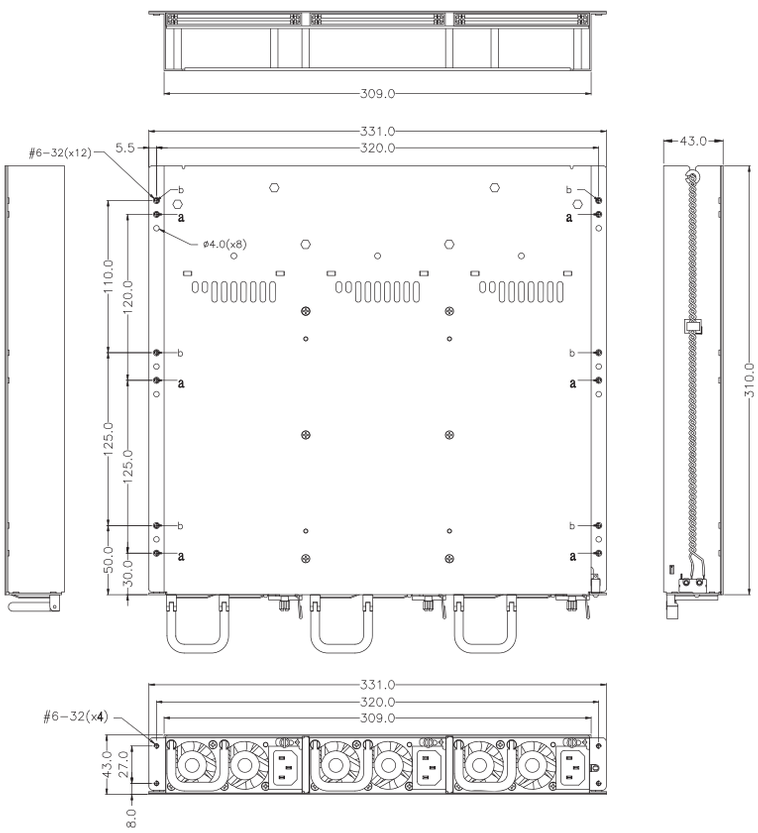

N+1 REDUNDANT

PMBus Optional

OUTPUT CHARACTERISTICS

MODEL	WATTAGE	OUTPUT					
		+5V	+12V	+3.3V	-5V	-12V	+5VSB
MTW3-5C50V3V	1250W	60A	95A	68A	X	1.2A	5A
MTW3-5H00V3V	1700W	60A	136A	68A	X	1.2A	5A
REGULATION LOAD		±5%	±5%	±5%	X	±5%	±5%
RIPPLE AND NOISE		50mV	120mV	50mV	X	120mV	50mV

REMARKS：
+5V AND +3.3V TOTAL OUTPUT MAX 380W

MTW3-5C50V3V
MTW3-5H00V3V

SPECIFICATION：

TEMPERATURE RANGE：OPERATING：0℃ ~ 45℃ , STORAGE：-20℃ ~ 80℃

HOLD UP TIME：16 ms MINIMUM AT FULL LOAD & NORMAL INPUT VOLTAGE

EFFICIENCY：TYPICAL >80% AT 115V, 30~100% MAX LOAD

POWER GOOD SIGNAL：ON DELAY 100 ms TO 500 ms, OFF DELAY 1 ms

OUTPUT PROTECTION：OPP / OVP / OCP / SCP

WARMING METHOD：BUZZER SOUND, TTL

REMOTE ON/OFF CONTROL

DIMENSION：300mm (D) x 101mm (W) x 125mm (H)

THE POWER-SUPPLY IS FOR CHASSIS-ASSEMBLY ONLY AND IS NOT ALLOWED TO BE OPERATED AS STAND-ALONE COMPONENT. FINAL ASSEMBLY HAS TO COMPLY WITH CORRESPONDING EMC- AND SAFETY-REGULATIONS.

INPUT CHARACTERISTICS

VOLTAGE：

90V ~ 264VAC (WITH ± 10% TOLERANCE)

FREQUENCY：

47 ~ 63HZ

INPUT CURRENT：

MTW3-5C50V3V
19A/8A MAX AT ANY LOW/HIGH INPUT VOLTAGE
MTW3-5H00V3V
27A/12A MAX AT ANY LOW/HIGH INPUT VOLTAGE

INRUSH CURRENT：

40A MAX. FOR 115 VAC PER MODULE; 60A MAX. FOR 230 VAC PER MODULE

POWER FACTOR CORRECTION：

PFC CAN REACH THE TARGET OF 95% @ 115V, FULL LOAD, FOLLOWING THE STANDARD OF IEC 61000-3-2

EMI：

IEC61000-3-2, FCC, CISPR 22(EN 55022)

EMS：

EN 61000-4-2 ESD, EN61000-4-4 EFT, EN61000-4-5 SURGE

SAFETY：

TO MEET UL, CUL, TUV

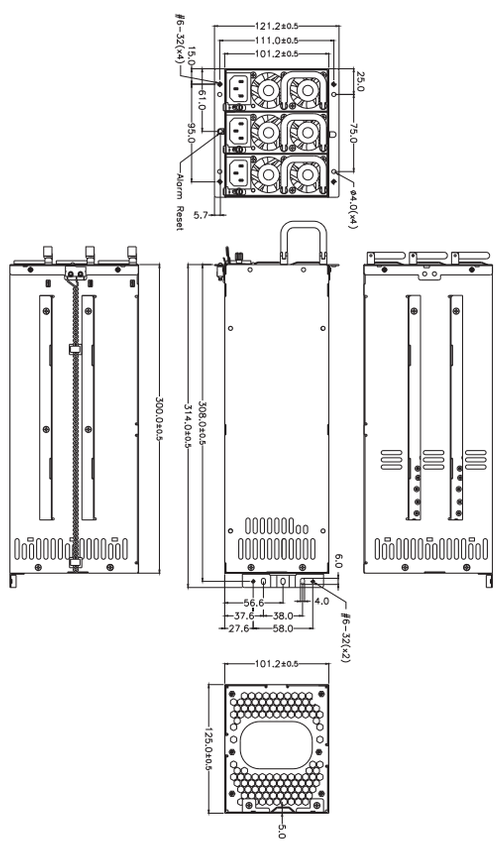

N+1 REDUNDANT

PMBus Optional

MTW4-5H80V3V

OUTPUT CHARACTERISTICS

MODEL	WATTAGE	OUTPUT					
		+5V	+12V	+3.3V	-5V	-12V	+5VSB
MTW4-5H80V3V	1780W	86A	135A	97A	X	1.6A	7A
REGULATION LOAD		±5%	±5%	±5%	X	±5%	±5%
RIPPLE AND NOISE		50mV	120mV	50mV	X	120mV	50mV

REMARKS：
+5V AND +3.3V TOTAL OUTPUT MAX 540W

SPECIFICATION：

TEMPERATURE RANGE：OPERATING：0℃ ~ 45℃ , STORAGE：-20℃ ~ 80℃

HOLD UP TIME：16 ms MINIMUM AT FULL LOAD & NORMAL INPUT VOLTAGE

EFFICIENCY：TYPICAL >80% AT 115V, 30~100% MAX LOAD

POWER GOOD SIGNAL：ON DELAY 100 ms TO 500 ms, OFF DELAY 1 ms

OUTPUT PROTECTION：OPP / OVP / OCP / SCP

WARMING METHOD：BUZZER SOUND, TTL

REMOTE ON/OFF CONTROL

DIMENSION：300mm (D) x 101.2mm (W) x 166mm (H)

THE POWER-SUPPLY IS FOR CHASSIS-ASSEMBLY ONLY AND IS NOT ALLOWED TO BE OPERATED AS STAND-ALONE COMPONENT. FINAL ASSEMBLY HAS TO COMPLY WITH CORRESPONDING EMC- AND SAFETY-REGULATIONS.

INPUT CHARACTERISTICS

VOLTAGE：

90V ~ 264VAC (WITH ± 10% TOLERANCE)

FREQUENCY：

47 ~ 63HZ

INPUT CURRENT：

27/12A MAX AT ANY LOW/HIGH INPUT VOLTAGE

INRUSH CURRENT：

40A MAX. FOR 115 VAC PER MODULE; 60A MAX. FOR 230 VAC PER MODULE

POWER FACTOR CORRECTION：

PFC CAN REACH THE TARGET OF 95% @ 115V, FULL LOAD, FOLLOWING THE STANDARD OF IEC 61000-3-2

EMI：

IEC61000-3-2, FCC, CISPR 22(EN 55022)

EMS：

EN 61000-4-2 ESD, EN61000-4-4 EFT, EN61000-4-5 SURGE

SAFETY：

TO MEET UL, CUL, TUV, CCC

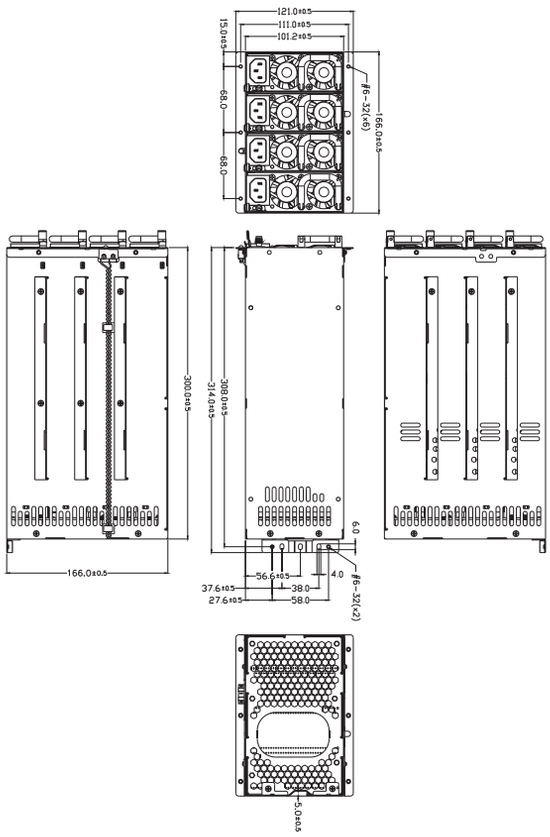

E143756

N+1 REDUNDANT

PMBus Optional

80 PLUS SILVER

R3G-5500V4V
R3G-5800V4V
R3G-5950V4V
R3G-5B40V4V

INPUT CHARACTERISTICS

VOLTAGE :

90~264VAC FULL RANGE

FREQUENCY :

47 ~ 63HZ

INPUT CURRENT :

WATTAGE	115V	230V
500W	8A	3A
800W	8A	3A
950W	8A	3A
1140W	9A	4A

INRUSH CURRENT :

35A/70A MAX. FOR 115/230 VAC POWER MODULE

POWER FACTOR CORRECTION :

PFC CAN REACH THE TARGET OF 95% AT 115/230VAC, FULL LOAD

EMI :

IEC61000-3-2, FCC, CISPR 22(EN 55022)

EMS :

EN 61000-4-2 ESD, EN61000-4-4 EFT, EN61000-4-5 SURGE

SAFETY :

TO MEET UL&CUL, TUV, CCC

E143756

OUTPUT CHARACTERISTICS

MODEL	WATTAGE	OUTPUT					
		+5V	+12V	+3.3V	-5V	-12V	+5VSB
R3G-5500V4V	500W	25A	40A	25A	X	0.8A	3.5A
R3G-5800V4V	800W	32A	63A	32A	X	1.2A	4A
R3G-5950V4V	950W	32A	76A	32A	X	1.2A	4A
R3G-5B40V4V	1140W	32A	90A	32A	X	1.2A	4A
REGULATION LOAD		±5%	±5%	±5%	X	±10%	±5%
RIPPLE AND NOISE		50mV	120mV	50mV	X	50mV	50mV

REMARKS :
THE OUTPUT CURRENT OF +5V AND +3.3V NOT EXCEED 170W / 190W / 190W

SPECIFICATION :

TEMPERATURE RANGE : OPERATING : 0°C ~ 40°C , STORAGE : -20°C ~ 80°C

HOLD UP TIME : 16 ms MINIMUM AT FULL LOAD & NORMAL INPUT VOLTAGE

EFFICIENCY : TYPICAL >80% AT 115V, 20~100% MAX LOAD

POWER GOOD SIGNAL : ON DELAY 100 ms TO 500 ms

OUTPUT PROTECTION : OPP / OVP / OCP / SCP

REMOTE ON/OFF CONTROL

LEAKAGE CURRENT : 3.5mA MAX. AT NOMINAL VOLTAGE 250VAC

DIMENSION : 276mm (D)×83mm (W)×127mm (H)

THE POWER-SUPPLY IS FOR CHASSIS-ASSEMBLY ONLY AND IS NOT ALLOWED TO BE OPERATED AS STAND-ALONE COMPONENT. FINAL ASSEMBLY HAS TO COMPLY WITH CORRESPONDING EMC- AND SAFETY-REGULATIONS.

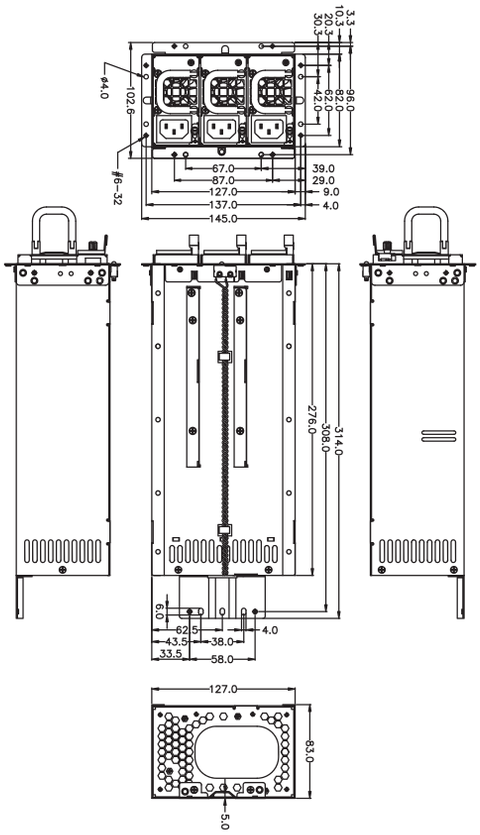

SPH2-5A00V4H
SPH2-5C00V4H

OUTPUT CHARACTERISTICS

MODEL	WATTAGE	OUTPUT					
		+5V	+12V	+3.3V	-5V	-12V	+5VSB
SPH2-5A00V4H	1000W	22A	83A	22A	X	0.5A	4A
SPH2-5C00V4H	1200W	22A	100A	22A	X	0.5A	4A
REGULATION LOAD		±5%	±5%	±5%	X	±5%	±5%
RIPPLE AND NOISE		50mV	120mV	50mV	X	120mV	50mV

REMARKS：
POWER MODULE TOTAL OUTPUT POWER OF +5V AND +3.3V NOT EXCEED 150W

INPUT CHARACTERISTICS

VOLTAGE：

90~264VAC FULL RANGE

FREQUENCY：

47 ~ 63HZ

INPUT CURRENT：

15/7.5 AMPS MAXIMUM AT ANY LOW/HIGH RANGE INPUT VOLTAGE

INRUSH CURRENT：

15/30 AMPS @ 115/230 VAC

POWER FACTOR CORRECTION：

PFC CAN REACH THE TARGET OF 95% @ 115V, FULL LOAD, FOLLOWING THE STANDARD OF IEC 61000-3-2

EMI：

IEC61000-3-2, FCC, CISPR 22(EN 55022)

EMS：

EN 61000-4-2 ESD, EN61000-4-4 EFT, EN61000-4-5 SURGE

SAFETY：

TO MEET UL&CUL, TUV, CCC

E143756

SPECIFICATION：

TEMPERATURE RANGE：OPERATING 0℃ ~ 50℃ , STORAGE -20℃ ~ 80℃

HOLD UP TIME：WHEN POWER SHUTDOWN DC OUTPUT 12V MUST BE MAINTAIN 10mS (SPH2-5A00V4H)/ 9mS (SPH2-SC00V4H) IN REGULATION LIMIT AT 90VAC INPUT VOLTAGE

EFFICIENCY：TYPICAL 83% AT115V, FULL LOAD. (PER SET)
TYPICAL 86% AT230V, FULL LOAD. (PER SET)

POWER GOOD SIGNAL：ON DELAY 100ms TO 500ms

OUTPUT PROTECTION：OPP / OVP / SCP

REMOTE ON / OFF CONTROL

BALANCE LOAD SHARING DESIGN

FAULTY ALARM METHODS：LED, BUZZER, TTL SIGNAL

DIMENSION： 404mm (D) x 127mm (W) x 49mm (H)

THE POWER-SUPPLY IS FOR CHASSIS-ASSEMBLY ONLY AND IS NOT ALLOWED TO BE OPERATED AS STAND-ALONE COMPONENT. FINAL ASSEMBLY HAS TO COMPLY WITH CORRESPONDING EMC- AND SAFETY-REGULATIONS.

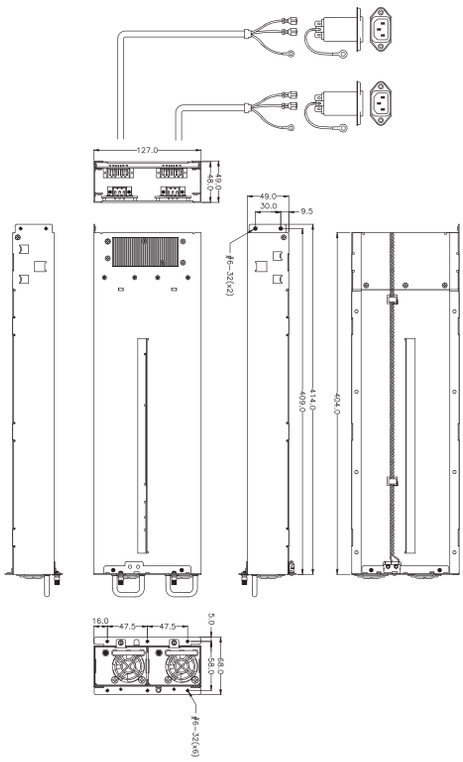

N+1 REDUNDANT

M1P4-6950V4H
M1P4-6D50V4H

OUTPUT CHARACTERISTICS

MODEL	WATTAGE	OUTPUT					
		+5V1 +5V2	+12V	+3.3V	-5V	-12V	+5VSB
M1P4-6950V4H	950W	32A	79A	25A	X	0.5A	5A
M1P4-6D50V4H	1350W	32A	112A	25A	X	0.5A	6A
REGULATION LOAD		±5%	±5%	±5%	X	±10%	±5%
RIPPLE AND NOISE		50mV	120mV	50mV	X	120mV	50mV

REMARKS：
+5V1, +5V2 AND +3.3V TOTAL OUTPUT MAX：350W; TOTAL OUTPUT MAX：950W/1350W

SPECIFICATION：

TEMPERATURE RANGE：OPERATING：0℃ ~ 40℃ , STORAGE：-20℃ ~ 80℃

HOLD UP TIME：16 ms MINIMUM AT FULL LOAD & NORMAL INPUT VOLTAGE

EFFICIENCY：80% TYPICAL AT 115VAC FULL LOAD

POWER GOOD SIGNAL：ON DELAY 100 ms TO 500 ms, OFF DELAY 1 ms

OUTPUT PROTECTION：OPP / OVP / OCP / SCP

REMOTE ON/OFF CONTROL

FAULTY ALARM METHODS：LED, BUZZER, TTL SIGNAL

HOT-SWAPPABLE/HOT PLUGGABLE REDUNDANCY FUNCTION

ISOLATION：BUILT-IN THE POWER MODULE

REMOTE SENSING DESIGN

DIMENSION：260mm (D) x 359mm (W) x 41.8mm (H)

THE POWER-SUPPLY IS FOR CHASSIS-ASSEMBLY ONLY AND IS NOT ALLOWED TO BE OPERATED AS STAND-ALONE COMPONENT. FINAL ASSEMBLY HAS TO COMPLY WITH CORRESPONDING EMC- AND SAFETY-REGULATIONS.

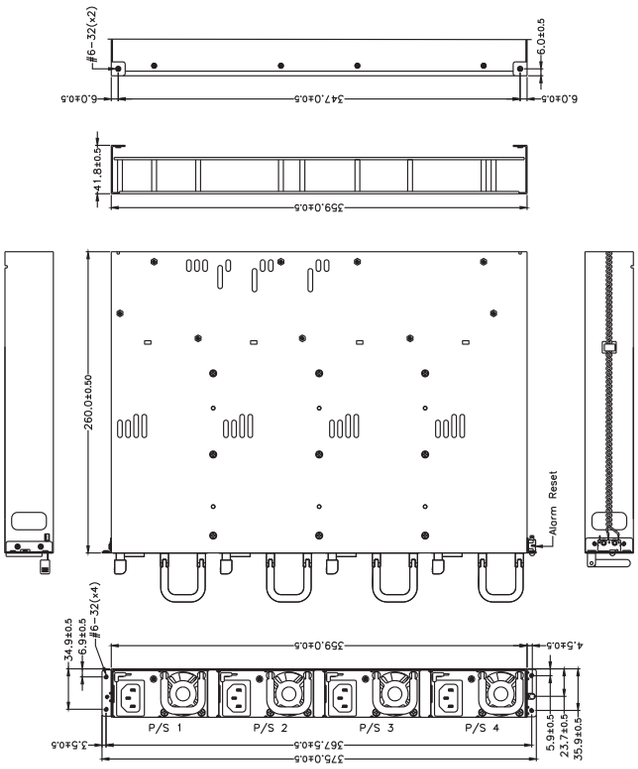

INPUT CHARACTERISTICS

VOLTAGE：

90~264VAC FULL RANGE

FREQUENCY：

47 ~ 63HZ

INPUT CURRENT：

15/8A MAX AT ANY LOW/HIGH INPUT VOLTAGE (950W)

21/10A MAX AT ANY LOW/HIGH INPUT VOLTAGE (1350W)

INRUSH CURRENT：

40/60A @ 115/230VAC (25℃)

POWER FACTOR CORRECTION：

PFC CAN REACH THE TARGET OF 95% @ 115V, FULL LOAD, FOLLOWING THE STANDARD OF IEC 61000-3-2

EMI：

IEC61000-3-2, FCC, CISPR 22(EN 55022)

EMS：

EN 61000-4-2 ESD, EN61000-4-4 EFT, EN61000-4-5 SURGE

SAFETY：

TO MEET UL, CUL, TUV, CCC

E143756

OUTPUT CHARACTERISTICS

MODEL	WATTAGE	OUTPUT					
		+5V	+12V	+3.3V	-5V	-12V	+5VSB
M1Z4-5A80V3H	1080W	64A	88A	64A	X	1.2A	6A
M1Z4-5C40V3H	1240W	64A	100A	64A	X	1.2A	6A
M1Z4-5D50V3H	1350W	64A	110A	64A	X	1.2A	6A
M1Z4-5E85V3H	1485W	64A	120A	64A	X	1.2A	6A
REGULATION LOAD		±5%	±5%	±5%	X	±5%	±5%
RIPPLE AND NOISE		70mV	120mV	70mV	X	120mV	70mV

M1Z4-5A80V3H
M1Z4-5C40V3H
M1Z4-5D50V3H
M1Z4-5E85V3H

INPUT CHARACTERISTICS

VOLTAGE：

90~264VAC FULL RANGE

FREQUENCY：

47 ~ 63HZ

INPUT CURRENT：

WATTAGE	115V	230V
1080W	16A	6A
1240W	19A	7A
1350W	20A	8A
1485W	22A	9A

INRUSH CURRENT：

35/40AMPS @ 115/230 VAC

POWER FACTOR CORRECTION：

POWER FACTOR CORRECTIONPFC CAN REACH THE TARGET OF 95% @ 115V, FULL LOAD,

FOLLOWING THE STANDARD OF IEC 61000-3-2

EMI：

IEC61000-3-2, FCC, CISPR 22(EN 55022)

EMS：

EN 61000-4-2 ESD, EN61000-4-4 EFT, EN61000-4-5 SURGE

SAFETY：

TO MEET UL&CUL, TUV, CCC

E143756

SPECIFICATION：

TEMPERATURE RANGE：OPERATING 0℃ ~50℃ , STORAGE –20℃ ~80℃

HOLD UP TIME：16 ms MINIMUM AT FULL LOAD & NORMAL INPUT VOLTAGE

EFFICIENCY：80% TYPICAL @ 115V FULL LOAD

POWER GOOD SIGNAL：ON DELAY 100 ms TO 500 ms, OFF DELAY 1 ms

OUTPUT PROTECTION:：OPP / OVP / OVP / SCP

WARNING METHOD：AUDIO ALARM, TTL

2 + 1, HOT-SWAPPABLE/HOT PLUGGABLE REDUNDANCY FUNCTION

N + 1 BALANCE LOAD SHARING DESIGN 5/12/3.3V CHANNEL

REMOTE SENSING DESIGN

DIMENSION：310mm (D) x 422mm (W) x 43mm (H)

THE POWER-SUPPLY IS FOR CHASSIS-ASSEMBLY ONLY AND IS NOT ALLOWED TO BE OPERATED AS STAND-ALONE COMPONENT. FINAL ASSEMBLY HAS TO COMPLY WITH CORRESPONDING EMC- AND SAFETY-REGULATIONS.

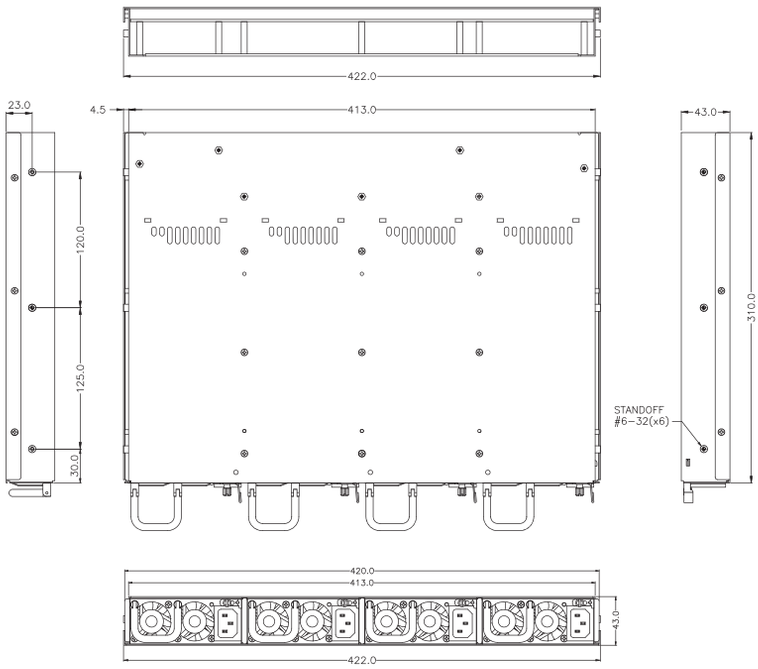

PMBus Optional

M1W4-5L80V3H
M1W4-5O50V3H
M1W4-5R20V3H
M1W4-5W40V3H
M1W4-5CH0V0H

INPUT CHARACTERISTICS

VOLTAGE：

90~264VAC FULL RANGE

FREQUENCY：

47 ~ 63HZ

INPUT CURRENT：

WATTAGE	115V	230V
2180W	30A	15A
2450W	42A	21A
2720W	45A	22.5A
3240W	45A	23A
3300W	45A	24A
3800W	X	26A

INRUSH CURRENT：

15/30 AMPS @ 115/230VAC

POWER FACTOR CORRECTION：

PFC CAN REACH THE TARGET OF 95% AT 115/230VAC, FULL LOAD

EMI：

IEC61000-3-2, FCC, CISPR 22(EN 55022)

EMS：

EN 61000-4-2 ESD, EN61000-4-4 EFT, EN61000-4-5 SURGE

SAFETY：

TO MEET UL&CUL, TUV, CCC

E143756

OUTPUT CHARACTERISTICS

MODEL	WATTAGE	OUTPUT					
		+5V	+12V	+3.3V	-5V	-12V	+5VSB
M1W4-5L80V3H	2180W	24A	178A	24A	X	1.5A	4A
M1W4-5O50V3H	2450W	24A	201A	24A	X	1.5A	4A
M1W4-5R20V3H	2720W	24A	223A	24A	X	1.5A	4A
M1W4-5W40V3H	3240W	24A	270A	24A	X	1.5A	4A
M1W4-5CH0V0H * 2	3800W	24A	316A	24A	X	1.5A	4A
REGULATION LOAD		±5%	±5%	±5%	X	±5%	±5%
RIPPLE AND NOISE		50mV	120mV	50mV	X	120mV	50mV

REMARKS：
TOTAL MAX OUTPUT OF +5V AND +3.3V NOT EXCEED 135W.
* 1 INPUT VOLTAGE IS 103 ~ 264 VAC (3300W)
* 2 INPUT VOLTAGE IS 180 ~ 264 VAC (3800W)

SPECIFICATION：

TEMPERATURE RANGE：OPERATING 0℃ ~50℃ · STORAGE -20℃ ~80℃

HOLD UP TIME：16mS IN REGULATION LIMIT AT 90 VAC INPUT VOLTAGE

EFFICIENCY：TYPICAL 84% AT FULL LOAD 115VAC (PER SET)

POWER GOOD SIGNAL：ON DELAY 100mS TO 550mS

OUTPUT PROTECTION：OPP / OVP / SCP

REMOTE ON/OFF CONTROL

REMOTE SENSING DESIGN

BALANCE LOAD SHARING DESIGN

WARNING METHOD：LED, BUZZER, TTL SIGNAL

DIMENSION：340mm (D) x 422mm (W) x 43mm (H)

THE POWER-SUPPLY IS FOR CHASSIS-ASSEMBLY ONLY AND IS NOT ALLOWED TO BE OPERATED AS STAND-ALONE COMPONENT. FINAL ASSEMBLY HAS TO COMPLY WITH CORRESPONDING EMC- AND SAFETY-REGULATIONS.

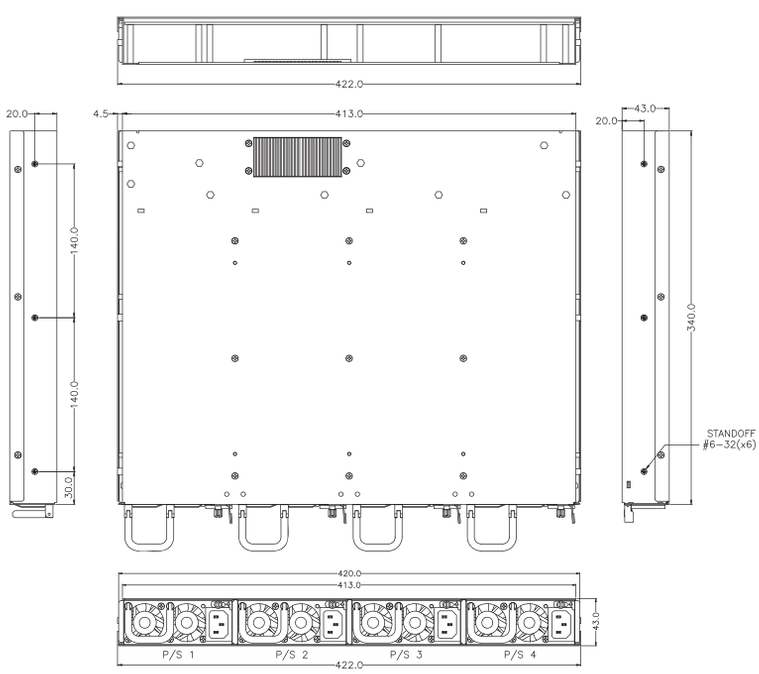

N+1 REDUNDANT

MTW4-5C50V3H
MTW4-5F50V3H
MTW4-5H10V3H
MTW4-5H80V3H
MTW4-5K50V3H
MTW4-5M10V3H
MTW4-5O30V3H

INPUT CHARACTERISTICS

VOLTAGE：

90~264VAC FULL RANGE

FREQUENCY：

47 ~ 63HZ

INPUT CURRENT：

WATTAGE	115V	230V
1250W	19A	8A
1550W	24A	11A
1710W	26A	11A
1780W	27A	12A
2050W	31A	13A
2210W	33A	14A
2430W	36A	16A

INRUSH CURRENT：

40/60 AMPS @115/230V

POWER FACTOR CORRECTION：

PFC CAN REACH THE TARGET OF 95% @ 115V, FULL LOAD, FOLLOWING THE STANDARD OF IEC 61000-3-2

EMI：

IEC61000-3-2, FCC, CISPR 22(EN 55022)

EMS：

EN 61000-4-2 ESD, EN61000-4-4 EFT, EN61000-4-5 SURGE

SAFETY：

TO MEET UL&CUL, TUV, CCC

E143756

OUTPUT CHARACTERISTICS

MODEL	WATTAGE	OUTPUT					
		+5V	+12V	+3.3V	-5V	-12V	+5VSB
MTW4-5C50V3H	1250W	60A	95A	68A	X	1.2A	5A
MTW4-5F50V3H	1550W	60A	127A	68A	X	1.2A	5A
MTW4-5H10V3H	1710W	60A	136A	68A	X	1.2A	5A
MTW4-5H80V3H	1780W	86A	135A	97A	X	1.6A	7A
MTW4-5K50V3H	2050W	86A	167A	97A	X	1.6A	7A
MTW4-5M10V3H	2210W	86A	180A	97A	X	1.6A	7A
MTW4-5O30V3H	2430W	86A	194A	97A	X	1.6A	7A
REGULATION LOAD		±5%	±5%	±5%	X	±5%	±5%
RIPPLE AND NOISE		50mV	120mV	50mV	X	50mV	50mV

REMARKS：
+5V AND +3.3V TOTAL OUTPUT MAX：380W / 380W / 380W / 540W / 540W / 540W / 540W

SPECIFICATION：

TEMPERATURE RANGE：OPERATING 0℃ ~45℃ , STORAGE -20℃ ~80℃

HOLD UP TIME：16mS IN REGULATOIN LIMIT AT 90VAC INPUT VOLTAGE

EFFICIENCY：>80% AT 115VAC, 30%~100% MAX LOAD

POWER GOOD SIGNAL：ON DELAY 100mS TO 500Ms

OUTPUT PROTECTION：OPP / OVP / OCP / SCP

REMOTE SENSING DESIGN

BALANCE LOAD SHARING DESIGN

HOT-SWAPPABLE/HOT PLUGGABLE REDUNDANCY FUNCTION

ISOLATION：BUILT-IN THE POWER MODULE

WARNING METHOD：LED, BUZZER, TTL SIGNAL

DIMENSION：340mm (D) x 422mm (W) x 43mm (H)

THE POWER-SUPPLY IS FOR CHASSIS-ASSEMBLY ONLY AND IS NOT ALLOWED TO BE OPERATED AS STAND-ALONE COMPONENT. FINAL ASSEMBLY HAS TO COMPLY WITH CORRESPONDING EMC- AND SAFETY-REGULATIONS.

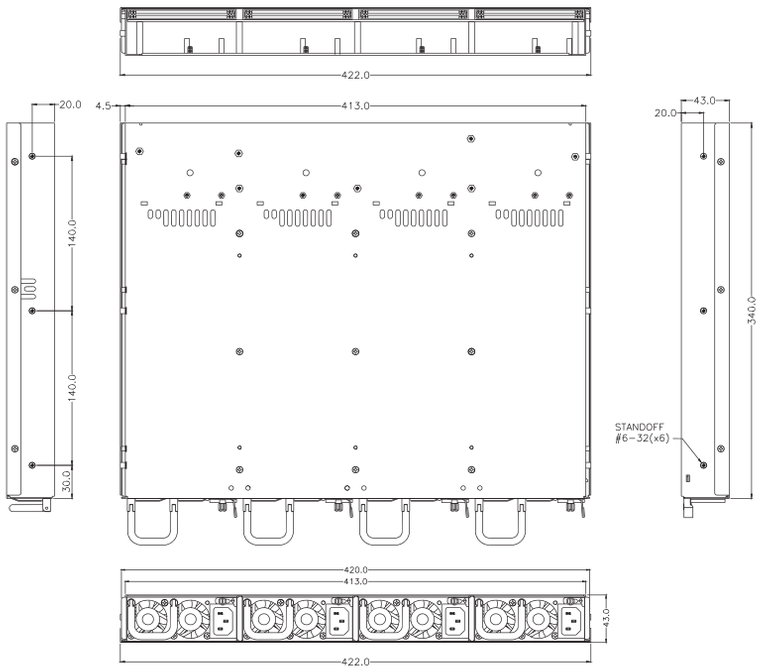

OUTPUT CHARACTERISTICS

MODEL	WATTAGE	OUTPUT					
		+5V	+12V	+3.3V	-5V	-12V	+5VSB
G1W4-5BG0V0H	2700W	32A	225A	32A	X	1A	6A
REGULATION LOAD		±5%	±5%	±5%	X	±5%	±5%
RIPPLE AND NOISE		50mV	120mV	50mV	X	120mV	50mV

REMARKS：
THE OUTPUT CURRENT OF +5V AND +3.3V NOT EXCEED 190W
TOTAL POWER:2700W (MAX)

G1W4-5BG0V0H

SPECIFICATION：

TEMPERATURE RANGE：OPERATING：0℃ ~ 40℃ , STORAGE：-20℃ --- 80℃

HOLD UP TIME：16 ms MINIMUM AT FULL LOAD & NORMAL INPUT VOLTAGE

EFFICIENCY：>80% TYPICAL AT 230 VAC FULL LOAD

POWER GOOD SIGNAL：ON DELAY 100 ms TO 500 ms, OFF DELAY 1 ms

OUTPUT PROTECTION：OPP / OVP / OCP / SCP

FAULTY ALARM METHODS：LED, BUZZER, TTL SIGNAL

HOT-SWAPPABLE/HOT PLUGGABLE REDUNDANCY FUNCTION

ISOLATION：BUILT-IN THE POWER MODULE

REMOTE SENSING DESIGN

LEAKAGE CURRENT：INPUT LEAKAGE CURRENT FROM LINE TO GROUND WILL BE LESS THAN 3.5MA RMS. MEASUREMENT WILL BE MADE AT 240 VAC AND 60HZ.

DIMENSION：340mm (D) x 422mm (W) x 43mm (H)

THE POWER-SUPPLY IS FOR CHASSIS-ASSEMBLY ONLY AND IS NOT ALLOWED TO BE OPERATED AS STAND-ALONE COMPONENT. FINAL ASSEMBLY HAS TO COMPLY WITH CORRESPONDING EMC- AND SAFETY-REGULATIONS.

INPUT CHARACTERISTICS

VOLTAGE：

90~264VAC FULL RANGE

FREQUENCY：

47 ~ 63HZ

INPUT CURRENT：

38/19A MAX AT ANY LOW/HIGH INPUT VOLTAGE

INRUSH CURRENT：

60/80 AMPS @ 115/230VAC

POWER FACTOR CORRECTION：

PFC CAN REACH THE TARGET OF 95% @ 115V, FULL LOAD, FOLLOWING THE STANDARD OF IEC 1000-3-2

EMI：

IEC61000-3-2, FCC, CISPR 22(EN 55022)

EMS：

EN 61000-4-2 ESD, EN6100-4-4 EFT, EN61000-4-5 SURGE

SAFETY：

TO MEET UL, CUL, TUV, CCC

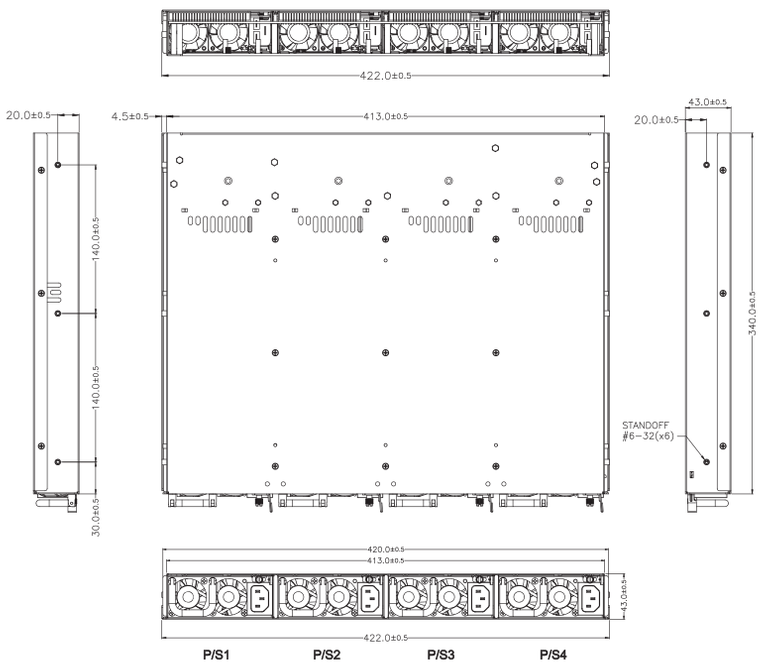

E143756

N+1 REDUNDANT

PSS2-5A00V3H
PSS2-5C00V3H

OUTPUT CHARACTERISTICS

MODEL	WATTAGE	OUTPUT					
		+5V	+12V	+3.3V	-5V	-12V	+5VSB
PSS2-5A00V3H	1000W	22A	83A	22A	X	0.5A	4A
PSS2-5C00V3H	1200W	22A	100A	22A	X	0.5A	4A
REGULATION LOAD		±5%	±5%	±5%	X	±5%	±5%
RIPPLE AND NOISE		50mV	120mV	50mV	X	120mV	50mV

REMARKS：
THE OUTPUT CURRENT OF+5V & +3.3V NOT EXCEED 150W

SPECIFICATION：

TEMPERATURE RANGE：OPERATING：0℃ ~50℃ ; STORAGE： -20℃ ~80℃

HOLD UP TIME：5V MUST BE MAINTAIN 10mS (PSS2-5A00V3H) / 9mS (PSS2-5C00V3H) IN REGULATION LIMIT AT 90V INPUT VOLTAGE

EFFICIENCY：TYPICAL 83% AT 115V, TYPICAL 86% AT 230V, FULL LOAD (PER SET)

POWER GOOD SIGNAL：ON DELAY 100 ms TO 500 ms,

OUTPUT PROTECTION：OPP / OVP / SCP

WARNING METHOD：LED, BUZZER, TTL SIGNAL

2 + 1, HOT-SWAPPABLE/HOT PLUGGABLE REDUNDANCY FUNCTION

N + 1 BALANCE LOAD SHARING DESIGN 5/12/3.3V CHANNEL

REMOTE SENSING DESIGN

DIMENSION：360mm (D) x 127mm (W) x 44mm (H)

THE POWER-SUPPLY IS FOR CHASSIS-ASSEMBLY ONLY AND IS NOT ALLOWED TO BE OPERATED AS STAND-ALONE COMPONENT. FINAL ASSEMBLY HAS TO COMPLY WITH CORRESPONDING EMC- AND SAFETY-REGULATIONS.

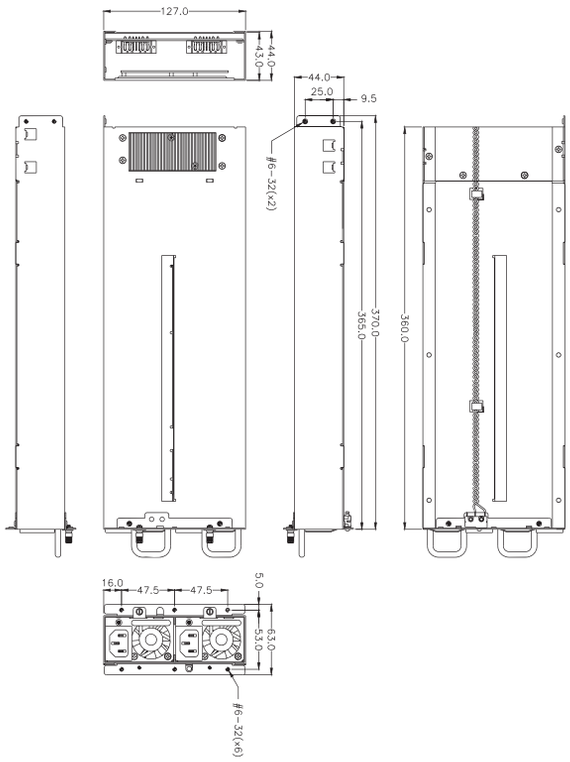

INPUT CHARACTERISTICS

VOLTAGE：

90~264VAC FULL RANGE

FREQUENCY：

47 ~ 63HZ

INPUT CURRENT：

15A/7.5A @ ANY LOW/HIGH RANGE INPUT VOLTAGE

INRUSH CURRENT：

15/30AMPS @ 115/230 VAC

POWER FACTOR CORRECTION：

POWER FACTOR CORRECTIONPFC CAN REACH THE TARGET OF 95% @ 110V, FULL LOAD,FOLLOWING THE STANDARD OF IEC 61000-3-2

EMI：

IEC61000-3-2, FCC, CISPR 22(EN 55022)

EMS：

EN 61000-4-2 ESD, EN61000-4-4 EFT, EN61000-4-5 SURGE

SAFETY：

TO MEET UL&CUL, TUV, CCC

E143756

OUTPUT CHARACTERISTICS

MODEL	WATTAGE	OUTPUT						
		+5V5	+12V5	+3.3V5	+9V5	-12V5	+12V1 ~+12V4	+5VSB1 ~+5VSB5
M1K6-6CB0V0H	3200W	36A	37A	31A	2A	0.5A	42A	3A
REGULATION LOAD		±5%	±5%	±5%	±5%	±5%	±5%	±5%
RIPPLE AND NOISE		50mV	120mV	120mV	50mV	120mV	120mV	50mV

REMARKS：
+12V5,+5V5,+3.3V5,+9V5,-12V5 TOTAL MAX 500W
TOTAL MAX OUTPUT 3200W

M1K6-6CB0V0H

SPECIFICATION：

TEMPERATURE RANGE：OPERATING 0℃～ 50℃ · STORAGE -20℃～ 80℃

HOLD UP TIME：15mS MIN. AT FULL LOAD

EFFICIENCY：TYPICAL 87% AT 230V FULL LOAD

POWER GOOD SIGNAL：ON DELAY 5mS TO 500mS

REMOTE ON/OFF CONTROL

OUTPUT PROTECTION：OPP / OCP / SCP / OVP

BALANCE LOAD SHARING DESIGN

HOT-SWAPPABLE/HOT PLUGGABLE REDUNDANCY FUNCTION

LEAKAGE CURRENT：3.5mA MAX. AT NOMINAL VOLTAGE 240VAC

WARNING METHODS：LED, BUZZER, TTL SIGNAL

DIMENSION：470(D) X 425(W) X 43(H) mm

THE POWER-SUPPLY IS FOR CHASSIS-ASSEMBLY ONLY AND IS NOT ALLOWED TO BE OPERATED AS STAND-ALONE COMPONENT. FINAL ASSEMBLY HAS TO COMPLY WITH CORRESPONDING EMC- AND SAFETY-REGULATIONS.

INPUT CHARACTERISTICS

VOLTAGE：

90~264VAC FULL RANGE

FREQUENCY：

47 ～ 63HZ

INPUT CURRENT：

45/23 AMPS MAXIMUM AT ANY LOW/HIGH RANGE INPUT VOLTAGE

INRUSH CURRENT：

15/30 AMPS @ 115/230VAC

POWER FACTOR CORRECTION：

PFC CAN REACH THE TARGET OF 95% @ 115V, FULL LOAD, FOLLOWING THE STANDARD OF IEC 61000-3-2

EMI：

IEC61000-3-2, FCC, CISPR 22(EN 55022)

EMS：

EN 61000-4-2 ESD, EN61000-4-4 EFT, EN61000-4-5 SURGE

SAFETY：

TO MEET UL&CUL, TUV, CCC

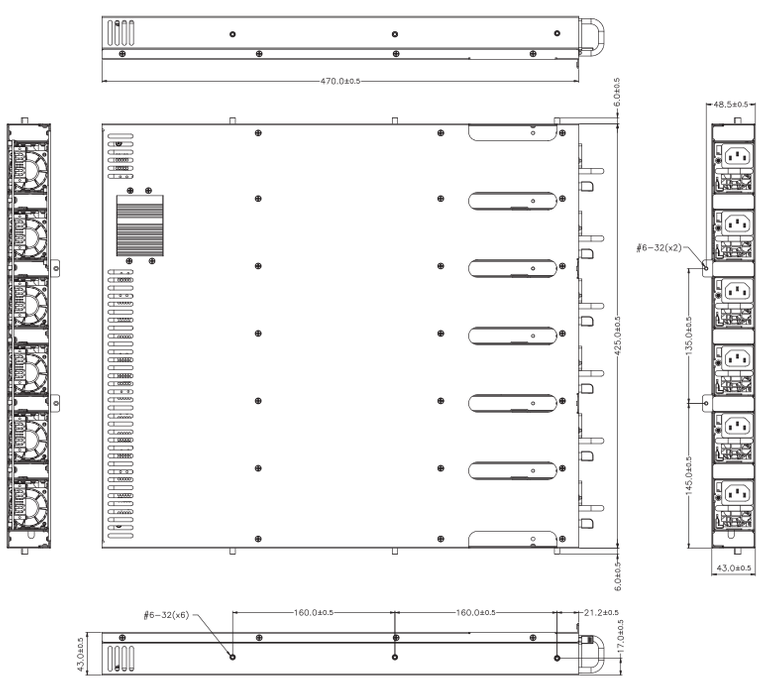

M1K6-5DH0V0H

OUTPUT CHARACTERISTICS

MODEL	WATTAGE	OUTPUT					
		+5V9	+12V9	+3.3V9	+9V9	+12V1 ~ +12V8	+5VSB
M1K6-5DH0V0H	4800W	4A	37A	4A	2A	42A	3A
REGULATION LOAD		±5%	±5%	±5%	±5%	±5%	±5%
RIPPLE AND NOISE		50mV	120mV	50mV	50mV	120mV	50mV

REMARKS：
+12V9, +5V9, +3.3V9, +9V9 TOTAL MAX 500W
+12V1~+12V9 TOTAL MAX 400A
TOTAL MAX OUTOT 4800W

SPECIFICATION：

TEMPERATURE RANGE：OPERATING 0℃ ~ 50℃ · STORAGE -20℃ ~ 80℃

HOLD UP TIME：10mS MIN. AT FULL LOAD

EFFICIENCY：TYPICAL 87% @230V FULL LOAD

POWER GOOD SIGNAL：ON DELAY 5mS TO 500mS

REMOTE ON/OFF CONTROL

OUTPUT PROTECTION：OPP / OVP / OCP / SCP

BALANCE LOAD SHARING DESIGN

HOT-SWAPPABLE/HOT PLUGGABLE REDUNDANCY FUNCTION

LEAKAGE CURRENT：3.5mA MAX. AT NOMINAL VOLTAGE 240VAC

WARNING METHODS：LED, BUZZER, TTL SIGNAL

DIMENSION：470mm (D) x 425mm (W) x 43mm (H)

THE POWER-SUPPLY IS FOR CHASSIS-ASSEMBLY ONLY AND IS NOT ALLOWED TO BE OPERATED AS STAND-ALONE COMPONENT. FINAL ASSEMBLY HAS TO COMPLY WITH CORRESPONDING EMC- AND SAFETY-REGULATIONS.

INPUT CHARACTERISTICS

VOLTAGE：

90~264VAC FULL RANGE

FREQUENCY：

47 ~ 63HZ

INPUT CURRENT：

75/38 AMPS MAXIMUM AT ANY LOW/HIGH RANGE INPUT VOLTAGE

INRUSH CURRENT：

15/30 AMPS @ 115/230VAC

POWER FACTOR CORRECTION：

PFC CAN REACH THE TARGET OF 95% @ 115V, FULL LOAD, FOLLOWING THE STANDARD OF IEC 61000-3-2

EMI：

IEC61000-3-2, FCC, CISPR 22(EN 55022)

EMS：

EN 61000-4-2 ESD, EN61000-4-4 EFT, EN61000-4-5 SURGE

SAFETY：

TO MEET UL&CUL, TUV, CCC

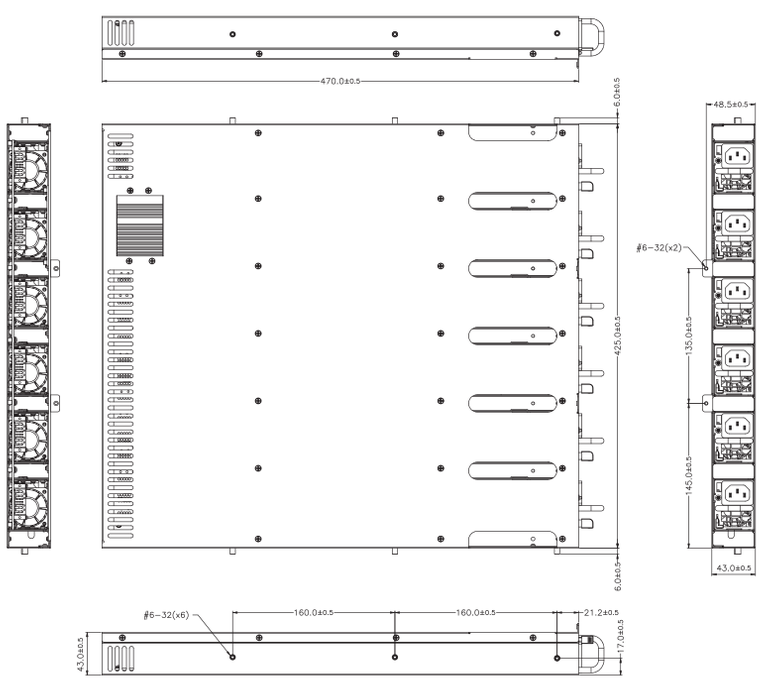

N+1 REDUNDANT

M1K6-6DH0V0H

OUTPUT CHARACTERISTICS

MODEL	WATTAGE	OUTPUT						
		+5V9	+12V9	-12V9	+3.3V9	+9V9	+12V1 ~+12V8	+5VSB1 ~+5VSB9
M1K6-6DH0V0H	4800W	36A	21A	0.5A	31A	2A	42A	3A
REGULATION LOAD		±5%	±5%	±5%	±5%	±5%	±5%	±5%
RIPPLE AND NOISE		50mV	120mV	120mV	120mV	50mV	120mV	50mV

REMARKS：
+5V9 AND +3.3V9 TOTAL MAX: 210W
+5VSB9, +12V9, +5V9, +3.3V9, +9V9, -12V9 TOTAL MAX 500W
TOTAL MAX OUTOT 4800W

SPECIFICATION：

TEMPERATURE RANGE：OPERATING 0℃～ 50℃ · STORAGE -20℃～ 80℃

HOLD UP TIME：15mS MIN. AT FULL LOAD

EFFICIENCY：TYPICAL 87% @230V FULL LOAD

POWER GOOD SIGNAL：ON DELAY 5mS TO 500mS · OFF DELAY 1mS

REMOTE ON/OFF CONTROL

OUTPUT PROTECTION: OPP / OCP / SCP / OVP

BALANCE LOAD SHARING DESIGN

HOT-SWAPPABLE/HOT PLUGGABLE REDUNDANCY FUNCTION

LEAKAGE CURRENT: 3.5mA MAX. AT NOMINAL VOLTAGE 240VAC

WARNING METHODS: LED, BUZZER, TTL SIGNAL

DIMENSION：470(D) X 425(W) X 43(H) mm

THE POWER-SUPPLY IS FOR CHASSIS-ASSEMBLY ONLY AND IS NOT ALLOWED TO BE OPERATED AS STAND-ALONE COMPONENT. FINAL ASSEMBLY HAS TO COMPLY WITH CORRESPONDING EMC- AND SAFETY-REGULATIONS.

INPUT CHARACTERISTICS

VOLTAGE：

90~264VAC FULL RANGE

FREQUENCY：

47 ～ 63HZ

INPUT CURRENT：

75/38 AMPS MAXIMUM AT ANY LOW/HIGH RANGE INPUT VOLTAGE(4800W)

INRUSH CURRENT：

15/30 AMPS @ 115/230VAC

POWER FACTOR CORRECTION：

PFC CAN REACH THE TARGET OF 95% @ 115V, FULL LOAD, FOLLOWING THE STANDARD OF IEC 61000-3-2

EMI：

IEC61000-3-2, FCC, CISPR 22(EN 55022)

EMS：

EN 61000-4-2 ESD, EN61000-4-4 EFT, EN61000-4-5 SURGE

SAFETY：

TO MEET UL&CUL, TUV, CCC

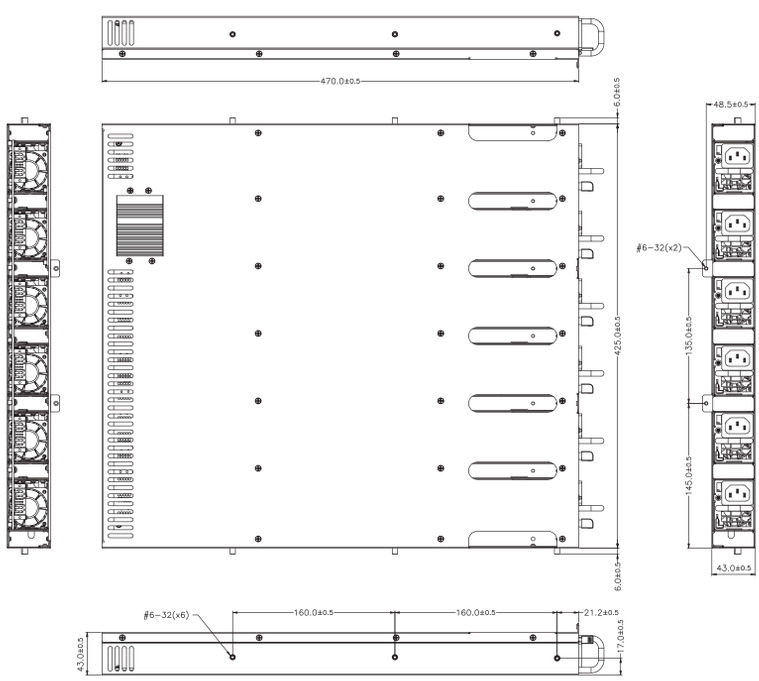

OUTPUT CHARACTERISTICS

MODEL	WATTAGE	OUTPUT					
		+5V	+12V	+3.3V	-5V	-12V	+5VSB
BP1P-5220V	220W	18A	17A	17A	X	0.3A	2A
REGULATION LOAD		±5%	±5%	±5%	X	±10%	±5%
RIPPLE AND NOISE		50mV	120mV	50mV	X	120mV	50mV

REMARKS：
TOTAL POWER：220W(MAX)

BP1P-5220V

SPECIFICATION：

TEMPERATURE RANGE：OPERATING 0°C ~ 50°C , OPERATING -20°C ~80°C

HOLD UP TIME：WHEN POWER SHUTDOWN DC OUTPUT 5V MUST BE MAINTAIN 1.6 mS AT 24V

EFFICIENCY：TYPICAL >80% AT 24VDC, FULL LOAD

OUTPUT PROTECTION：OPP / OVP / OCP / SCP

POWER GOOD SIGNAL：ON DELAY 100mS TO 500mS · OFF DELAY 1Ms

REMOTE ON/OFF CONTROL

DIMENSION：170mm (D)×81.5mm (W)×40.3mm (H)

THE POWER-SUPPLY IS FOR CHASSIS-ASSEMBLY ONLY AND IS NOT ALLOWED TO BE OPERATED AS STAND-ALONE COMPONENT. FINAL ASSEMBLY HAS TO COMPLY WITH CORRESPONDING EMC- AND SAFETY-REGULATIONS.

INPUT CHARACTERISTICS

VOLTAGE：

20~ 36 VDC

FREQUENCY：

DC

INPUT CURRENT：

20~ 36 VDC / 15~8A (12AMP@24VDC)

INRUSH CURRENT：

28A AT 24VDC (AT 25 DEGREES AMBIENT COLD START)

EMI：

FCC, CISPR 22(EN 55022)

EMS：

EN 61000-4-2 ESD, EN61000-4-4 EFT, EN61000-4-5 SURGE

SAFETY：

TO MEET UL, CUL, TUV

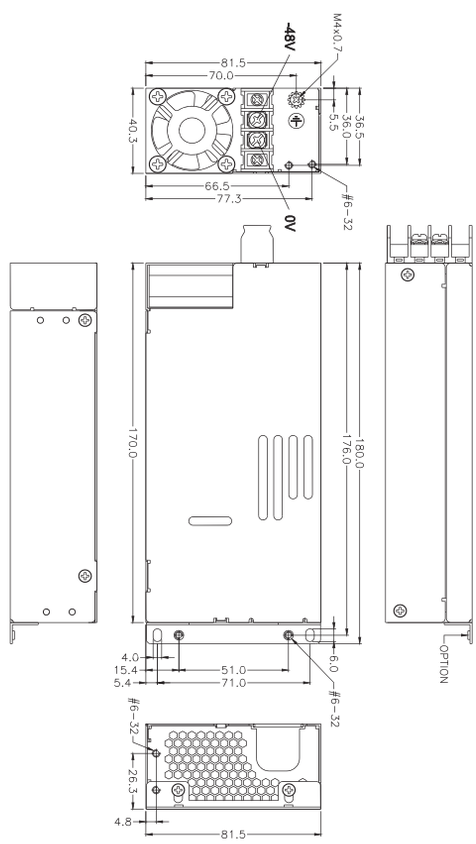

OUTPUT CHARACTERISTICS

MODEL	WATTAGE	OUTPUT					
		+5V	+12V	+3.3V	-5V	-12V	+5VSB
DP1P-5300V	300W	18A	24A	17A	X	0.3A	2.5A
DP1P-5320V	320W	18A	26A	17A	X	0.3A	2.5A
REGULATION LOAD		±5%	±5%	±5%	X	±10%	±5%
RIPPLE AND NOISE		50mV	120mV	50mV	X	120mV	50mV

REMARKS：
+5V AND +3.3V TOTAL OUTPUT MAX：120W

DP1P-5300V
DP1P-5320V

SPECIFICATION：

TEMPERATURE RANGE：OPERATING 0°C ~ 40°C , OPERATING -20°C ~80°C

HOLD UP TIME：WHEN POWER SHUTDOWN DC OUTPUT 5V MUST BE MAINTAIN 1.6 mS AT -48V

EFFICIENCY：TYPICAL >80% AT -48V, FULL LOAD

OUTPUT PROTECTION：OPP / OVP / OCP / SCP

POWER GOOD SIGNAL：ON DELAY 100mS TO 500mS · OFF DELAY 1Ms

DIMENSION：170mm (D)×81.5mm (W)×40.3mm (H)

THE POWER-SUPPLY IS FOR CHASSIS-ASSEMBLY ONLY AND IS NOT ALLOWED TO BE OPERATED AS STAND-ALONE COMPONENT. FINAL ASSEMBLY HAS TO COMPLY WITH CORRESPONDING EMC- AND SAFETY-REGULATIONS.

INPUT CHARACTERISTICS

VOLTAGE：

-36~ -72 VDC

FREQUENCY：

DC

INPUT CURRENT：

-36 ~ -72VDC / 12~6A （7 / 8.5AMP AT -48VDC）

INRUSH CURRENT：

28/30A AT -48VDC (AT 25 DEGREES AMBIENT COLD START)

EMI：

FCC, CISPR 22(EN 55022)

EMS：

EN 61000-4-2 ESD, EN61000-4-4 EFT, EN61000-4-5 SURGE

SAFETY：

TO MEET UL, CUL, TUV

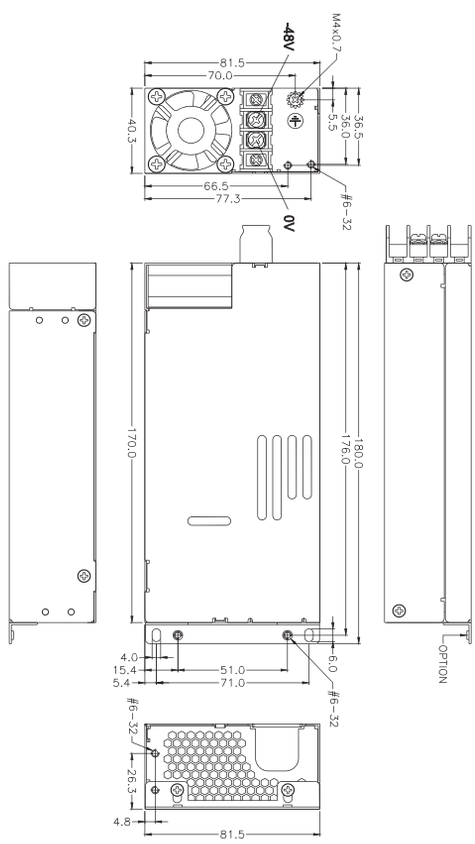

E143756

BP1H-5420V
BP1H-5460V

OUTPUT CHARACTERISTICS

MODEL	WATTAGE	OUTPUT					
		+5V	+12V	+3.3V	-5V	-12V	+5VSB
BP1H-5420V	420W	25A	33A	25A	X	0.8A	3A
BP1H-5460V	460W	25A	37A	25A	X	0.8A	3A
REGULATION LOAD		±5%	±5%	±5%	±5%	±10%	±5%
RIPPLE AND NOISE		50mV	120mV	50mV	50mV	120mV	50mV

REMARKS：
+5V AND +3.3V TOTAL OUTPUT MAX：170W

SPECIFICATION：

TEMPERATURE RANGE：OPERATING 0°C ~ 40°C STORAGE -20°C ~80°C

HOLD UP TIME：1.6mS MINIMUM AT 24V FULL LOAD

EFFICIENCY：>80% TYPICAL AT 24V FULL LOAD

POWER GOOD SIGNAL：ON DELAY 100 ms TO 500 ms

OUTPUT PROTECTION：OPP / OVP / OCP / SCP

DIMENSION：225mm (D) x 100mm (W) x 40.5mm (H)

THE POWER-SUPPLY IS FOR CHASSIS-ASSEMBLY ONLY AND IS NOT ALLOWED TO BE OPERATED AS STAND-ALONE COMPONENT. FINAL ASSEMBLY HAS TO COMPLY WITH CORRESPONDING EMC- AND SAFETY-REGULATIONS.

INPUT CHARACTERISTICS

VOLTAGE：

18~ 36 VDC

INPUT CURRENT：

BP1H-5420V

18-36VDC / 33-16AMP (24AMP AT 24VDC)

BP1H-5460V

18-36VDC / 35-18AMP (26AMP AT 24VDC)

INRUSH CURRENT：

50A@ 24VDC (AT 25 DEGREES AMBIENT COLD START)

EMI：

FCC, CISPR 22(EN 55022)

EMS：

EN 61000-4-2 ESD, EN61000-4-4 EFT, EN61000-4-5 SURGE

SAFETY：

TO MEET UL, CUL, TUV

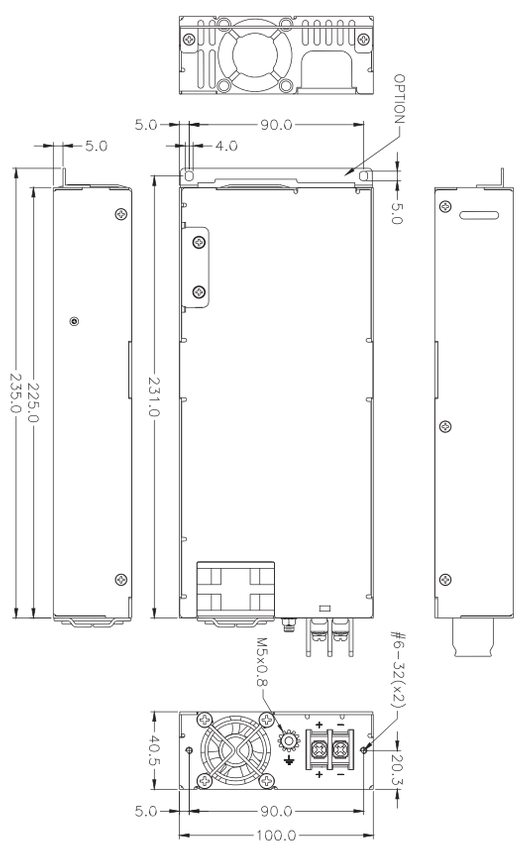

E143756

OUTPUT CHARACTERISTICS

MODEL	WATTAGE	OUTPUT					
		+5V	+12V	+3.3V	-5V	-12V	+5VSB
DP1H-5460V	460W	25A	37A	25A	X	0.8A	3A
DP1H-5550V	550W	25A	45A	25A	X	0.8A	3A
REGULATION LOAD		±5%	±5%	±5%	X	±10%	±5%
RIPPLE AND NOISE		50mV	120mV	50mV	X	120mV	50mV

REMARKS：
+5 V AND +3.3V TOTAL OUTPUT MAX. 170 WATTS

DP1H-5460V
DP1H-5550V

SPECIFICATION：

TEMPERATURE RANGE：OPERATING 0℃ ~40℃ , STORAGE -20℃ ~80℃

HOLD UP TIME：DC OUTPUT 12V MUST BE MAINTAIN 1.6 ms AT -48V

EFFICIENCY：>80% AT -48V, FULL LOAD

POWER GOOD SIGNAL：ON DELAY 100 ms TO 500 ms

OUTPUT PROTECTION：OPP / OVP / OCP / SCP

DIMENSION：225mm (D) x 100mm (W) x 40.5mm (H)

THE POWER-SUPPLY IS FOR CHASSIS-ASSEMBLY ONLY AND IS NOT ALLOWED TO BE OPERATED AS STAND-ALONE COMPONENT. FINAL ASSEMBLY HAS TO COMPLY WITH CORRESPONDING EMC- AND SAFETY-REGULATIONS.

INPUT CHARACTERISTICS

VOLTAGE：

DC – 36 V ~ – 72 V

INPUT CURRENT：

DP1H-5460V

-36 ~ -72 VDC / 16~8AMP (12AMP AT -48VDC)

DP1H-5550V

-36 ~ -72 VDC / 25~10AMP (16AMP AT -48VDC)

INRUSH CURRENT：

50 A @-48VDC(AT 25 DEGREES AMBIENT COLD START)

EMI：

FCC, CISPR 22(EN 55022)

EMS：

EN 61000-4-2 ESD, EN61000-4-4 EFT, EN61000-4-5 SURGE

SAFETY：

TO MEET UL, CUL, TUV

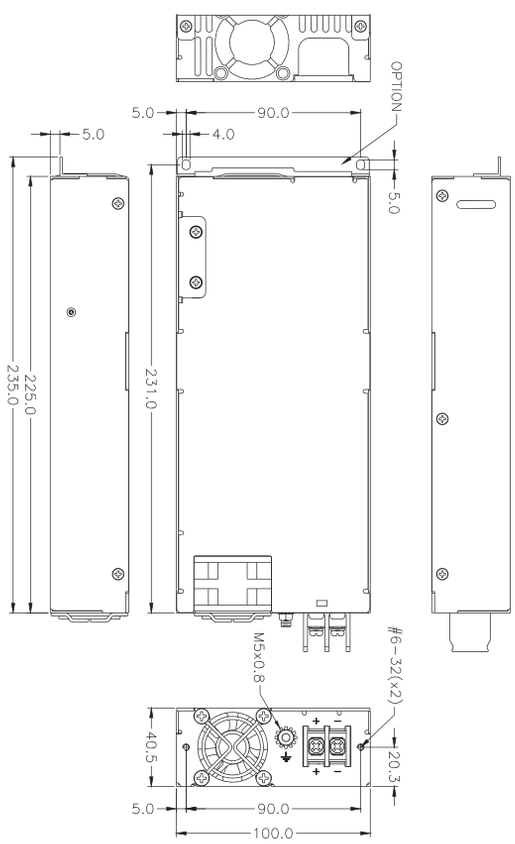

E143756

BP2H-5420V
BP2H-5460V

OUTPUT CHARACTERISTICS

MODEL	WATTAGE	OUTPUT					
		+5V	+12V	+3.3V	-5V	-12V	+5VSB
BP2H-5420V	420W	25A	34A	25A	X	0.8A	3A
BP2H-5460V	460W	25A	37A	25A	X	0.8A	3A
REGULATION LOAD		±5%	±5%	±5%	X	±10%	±5%
RIPPLE AND NOISE		50mV	120mV	50mV	X	120mV	50mV

REMARKS：
+5V AND +3.3V TOTAL OUTPUT MAX：170W

SPECIFICATION：

TEMPERATURE RANGE：OPERATING 0°C ~ 40°C , STORAGE -20~80°C

HOLD UP TIME : WHEN POWER SHUTDOWN DC OUTPUT 12V MUST BE MAINTAIN 1.6 ms AT 24V

EFFICIENCY：>80% TYPICAL AT 24V, FULL LOAD

POWER GOOD SIGNAL：ON DELAY 100mS TO 500mS · OFF DELAY 1mS

OUTPUT PROTECTION：OPP / OVP / OCP / SCP

DIMENSION：215mm (D)×100mm (W)×70mm (H)

THE POWER-SUPPLY IS FOR CHASSIS-ASSEMBLY ONLY AND IS NOT ALLOWED TO BE OPERATED AS STAND-ALONE COMPONENT. FINAL ASSEMBLY HAS TO COMPLY WITH CORRESPONDING EMC- AND SAFETY-REGULATIONS.

INPUT CHARACTERISTICS

VOLTAGE：

DC 18V ~ 36V

INPUT CURRENT：

BP2H-5420V

18~36VDC / 33~16AMP (24AMPS AT 24 VDC)

BP2H-5460V

18~36VDC / 35~18AMP (26A (RMS) AT 24 VDC)

INRUSH CURRENT：

50 AMPS @24VDC(AT 25 DEGREES AMBIENT COLD START)

EMI：

FCC, CISPR 22(EN 55022)

EMS：

EN 61000-4-2 ESD, EN61000-4-4 EFT, EN61000-4-5 SURGE

SAFETY：

TO MEET UL, CUL, TUV

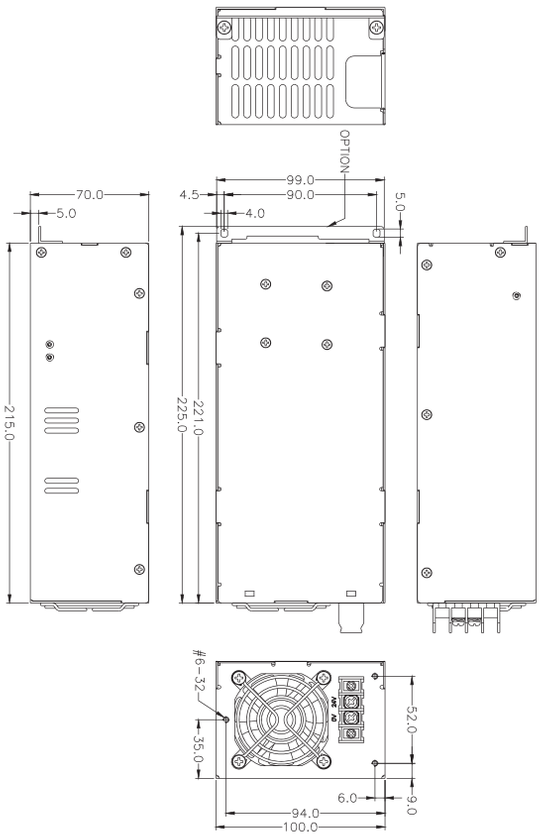

E143756

DC 2U

DP2H-5460V
DP2H-5500V
DP2H-5550V

OUTPUT CHARACTERISTICS

MODEL	WATTAGE	OUTPUT					
		+5V	+12V	+3.3V	-5V	-12V	+5VSB
DP2H-5460V	460W	25A	37A	25A	X	0.8A	3A
DP2H-5500V	500W	25A	41A	25A	X	0.8A	3A
DP2H-5550V	550W	25A	45A	25A	X	0.8A	3A
REGULATION LOAD		±5%	±5%	±5%	X	±10%	±5%
RIPPLE AND NOISE		50mV	120mV	50mV	X	120mV	50mV

REMARKS :
+5V AND +3.3V TOTAL OUTPUT MAX : 170W

SPECIFICATION :

TEMPERATURE RANGE : OPERATING 0°C ~40°C , STORAGE -20~80°C

HOLD UP TIME : WHEN POWER SHUTDOWN DC OUTPUT 12V MUST BE MAINTAIN 1.6ms AT -48V

EFFICIENCY : >80% TYPICAL AT DC-48 INPUT, FULL LOAD

POWER GOOD SIGNAL : ON DELAY 100 ms TO 500 ms, OFF DELAY 1 ms

OUTPUT PROTECTION : OPP / OVP / OCP / SCP

DIMENSION : 215mm (D) x 100mm (W) x 70mm (H)

THE POWER-SUPPLY IS FOR CHASSIS-ASSEMBLY ONLY AND IS NOT ALLOWED TO BE OPERATED AS STAND-ALONE COMPONENT. FINAL ASSEMBLY HAS TO COMPLY WITH CORRESPONDING EMC- AND SAFETY-REGULATIONS.

INPUT CHARACTERISTICS

VOLTAGE :

-36 ~ -72 VDC

INPUT CURRENT :

DP2H-5460V

-36~-72VDC / 16~8AMP (12 AMP AT -48VDC)

DP2H-5500V

-36~-72VDC / 19~9AMP (14 AMP AT -48VDC)

DP2H-5550V

-36~-72VDC / 25~10AMP (16 AMP AT -48VDC)

INRUSH CURRENT :

50AMPS @-48VDC (AT 25DEGREES AMBIENT COLD START)

EMI :

FCC, CISPR 22(EN 55022)

EMS :

EN 61000-4-2 ESD, EN61000-4-4 EFT, EN61000-4-5 SURGE

SAFETY :

TO MEET UL, CUL, TUV

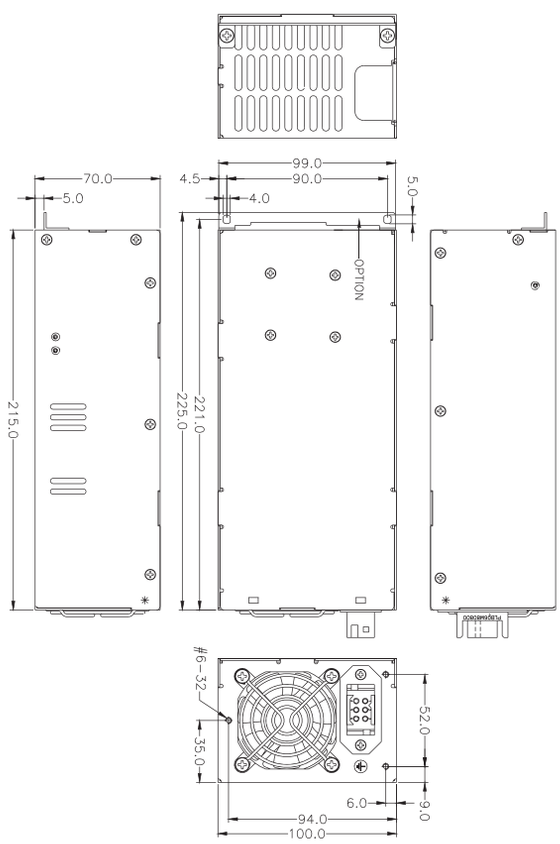

E143756

OUTPUT CHARACTERISTICS

MODEL	WATTAGE	OUTPUT					
		+5V	+12V	+3.3V	-5V	-12V	+5VSB
BHG2-5300V	300W	25A	25A	25A	X	0.8A	2.5A
BHG2-5350V	350W	25A	28A	25A	X	0.8A	2.5A
BHG2-5400V	400W	25A	30A	25A	X	0.8A	3.5A
REGULATION LOAD		±5%	±5%	±5%	X	±10%	±5%
RIPPLE AND NOISE		50mV	120mV	50mV	X	120mV	50mV

REMARKS :
THE OUTPUT CURRENT OF +5V & +3.3V NOT EXCEED 30A/30A/40A

BHG2-5300V
BHG2-5350V
BHG2-5400V

SPECIFICATION :

TEMPERATURE RANGE : OPERATING 0℃ ~ 40℃ , STORAGE -20℃ ~80℃

HOLD UP TIME : WHEN POWER SHUTDOWN DC OUTPUT 12V MUST BE MAINTAIN 1mSEC AT 24V

EFFICIENCY : >80% TYPICAL AT 24V, FULL LOAD

POWER GOOD SIGNAL : ON DELAY 100 ms TO 500 ms, OFF DELAY 1 ms

OUTPUT PROTECTION : OPP / OVP / OCP / SCP

DIMENSION : 140mm (D) x 150mm (W) x 86mm (H) (PS/2)

THE POWER-SUPPLY IS FOR CHASSIS-ASSEMBLY ONLY AND IS NOT ALLOWED TO BE OPERATED AS STAND-ALONE COMPONENT. FINAL ASSEMBLY HAS TO COMPLY WITH CORRESPONDING EMC- AND SAFETY-REGULATIONS.

INPUT CHARACTERISTICS

VOLTAGE :

18~36VDC(300W.350W) / 20~36VDC (400W)

INPUT CURRENT :

300W 22~11 AMP (16 AMP AT 24VDC)

350W 25~13 AMP (19 AMP AT 24VDC)

400W 30~15 AMP (22 AMP AT 24VDC)

INRUSH CURRENT :

50/50/60 AMPS @ 24VDC

EMI :

FCC, CISPR 22(EN 55022)

EMS :

EN 61000-4-2 ESD, EN61000-4-4 EFT, EN61000-4-5 SURGE

SAFETY :

TO MEET UL, CUL, TUV

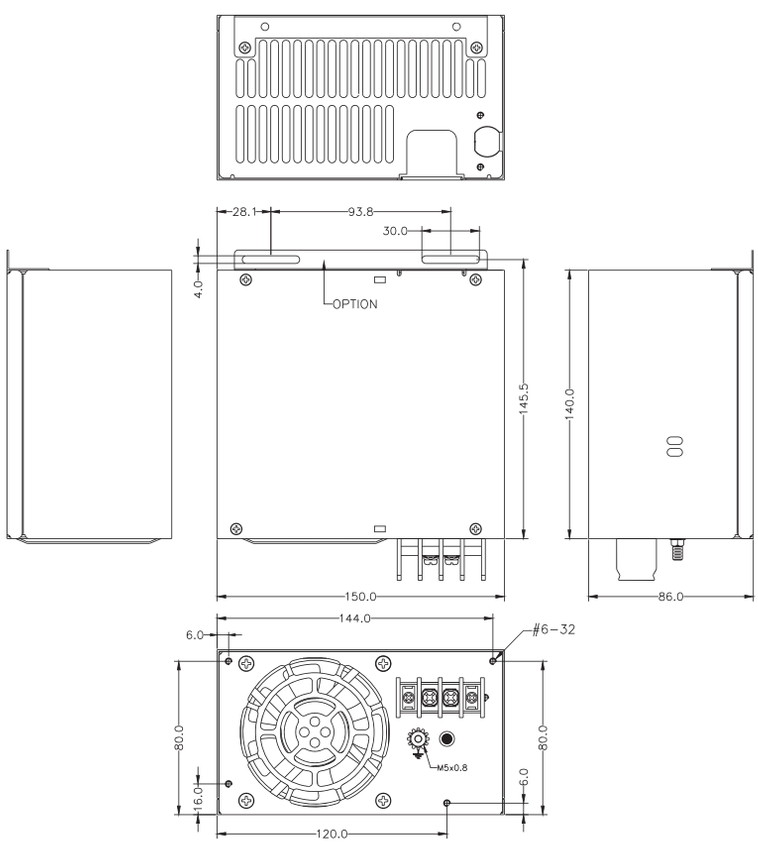

E143756

DHG2-5400V
DHG2-5500V
DHG2-5600V

OUTPUT CHARACTERISTICS

MODEL	WATTAGE	OUTPUT					
		+5V	+12V	+3.3V	-5V	-12V	+5VSB
DHG2-5400V	400W	25A	32A	25A	X	0.8A	3.5A
DHG2-5500V	500W	25A	41A	25A	X	0.8A	3.5A
DHG2-5600V	600W	25A	45A	25A	X	0.8A	3.5A
REGULATION LOAD		±5%	±5%	±5%	X	±10%	±5%
RIPPLE AND NOISE		50mV	120mV	50mV	X	120mV	50mV

REMARKS :
THE OUTPUT CURRENT OF +5V & +3.3V NOT EXCEED 40A

SPECIFICATION :

TEMPERATURE RANGE : OPERATING 0°C ~ 40°C , STORAGE -20°C ~ 80°C

HOLD UP TIME : WHEN POWER SHUTDOWN DC OUTPUT 12V MUST BE MAINTAIN 1.6ms AT -48V

EFFICIENCY : >80% TYPICAL AT -48V, FULL LOAD

POWER GOOD SIGNAL : ON DELAY 100 ms TO 500 ms, OFF DELAY 1 ms

OUTPUT PROTECTION : OPP / OVP / OCP / SCP

DIMENSION : 140mm (D) x 150mm (W) x 86mm (H) (PS/2)

THE POWER-SUPPLY IS FOR CHASSIS-ASSEMBLY ONLY AND IS NOT ALLOWED TO BE OPERATED AS STAND-ALONE COMPONENT. FINAL ASSEMBLY HAS TO COMPLY WITH CORRESPONDING EMC- AND SAFETY-REGULATIONS.

INPUT CHARACTERISTICS

VOLTAGE :

-36 ~ -72VDC

INPUT CURRENT :

400W 15~8 AMP (11 AMP AT -48VDC)

500W 18~9 AMP (13 AMP AT -48VDC)

600W 21~11 AMP (16 AMP AT -48VDC)

INRUSH CURRENT :

50AMPS @ -48VDC

EMI :

FCC, CISPR 22(EN 55022)

EMS :

EN 61000-4-2 ESD, EN61000-4-4 EFT, EN61000-4-5 SURGE

SAFETY :

TO MEET UL, CUL, TUV

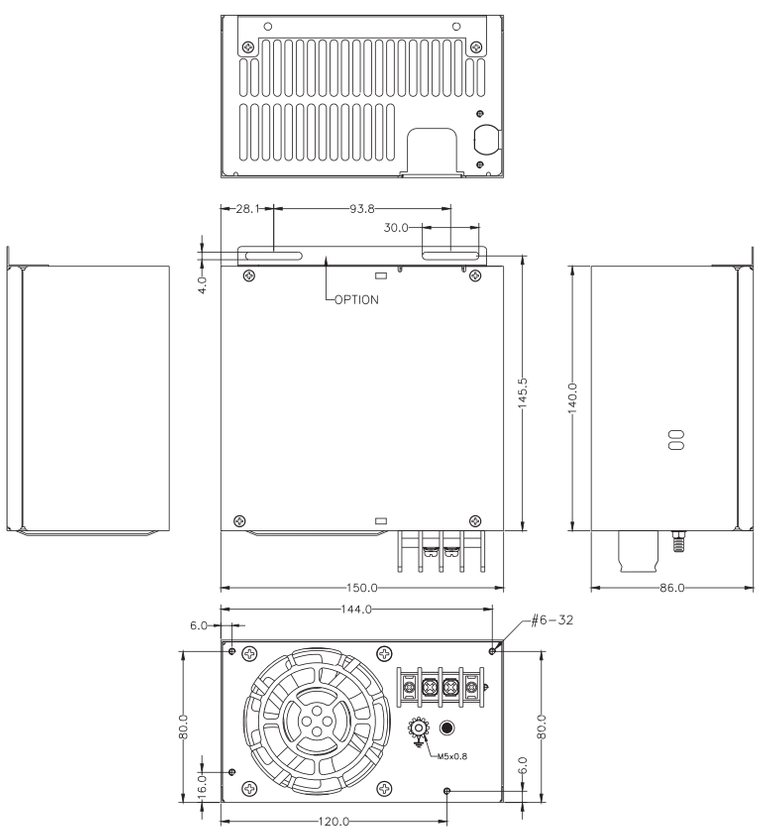

E143756

OUTPUT CHARACTERISTICS

MODEL	WATTAGE	OUTPUT					
		+5V	+12V	+3.3V	-5V	-12V	+5VSB
DR1U2-5200V4H	200W	14A	16A	14A	X	0.3A	2A
REGULATION LOAD		±5%	±5%	±5%	X	±5%	±5%
RIPPLE AND NOISE		50mV	120mV	50mV	X	120mV	50mV

REMARKS：
POWER MODULE TOTAL OUTPUT POWER OF +5V AND +3.3V NOT EXCEED 100W.
POWER MODULE TOTAL OUTPUT POWER NOT EXCEED 200W

DR1U2-5200V4H

10AMPS @ -48VDC HIGH FREQENCY PEAK AMPLI-TUDES LASTING LESS THAN 50ms (AT 25 DEGREES AMBIENT COLD START)

INPUT CHARACTERISTICS

VOLTAGE：

-40 ~ -72VDC

FREQUENCY：

DC

STEADY-STATE CURRENT：

10/5A MAXIMUM AT ANY LOW/HIGH RANGE INPUT VOLTAGE

INRUSH CURRENT：

10A MAX. @-48VDC HIGH FREQENCY PEAK AMPLI-TUDES LASTING LESS THAN 50mS (AT 25 DEGREES AMBIENT COLD START)

START UP CURRENT：

13A MAX. @-48VDC INPUT

EMI：

IEC61000-3-2, FCC, CISPR 22(EN 55022)

EMS：

EN 61000-4-2 ESD, EN61000-4-4 EFT, EN61000-4-5 SURGE

SAFETY：

TO MEET UL, CUL, TUV, CCC

E143756

SPECIFICATION：

TEMPERATURE RANGE：OPERATING 0℃～ 50℃ , STOREAGE -20℃ ~80℃

HOLD UP TIME：1mS MIN. IN REGULATION LIMIT AT NORMAL INPUT VOLTAGE (DC-48V)

EFFICIENCY(PER SET)：TYPICAL 76-80% AT -48V, 12V/16A 5VSB/1.6A

OUTPUT PROTECTION：OPP / OVP / SCP

REMOTE ON / OFF CONTROL

REMOTE SENSING DESIGN

HOT-SWAPPABLE/HOT PLUGGABLE REDUNDANCY FUNCTION

ISOLATION：BUILT-IN THE POWER MODULE

FAULTY ALARM METHODS：LED, BUZZER, TTL SIGNAL

DIMENSION：260mm (D) x 106mm (W) x 41.3mm (H)

THE POWER-SUPPLY IS FOR CHASSIS-ASSEMBLY ONLY AND IS NOT ALLOWED TO BE OPERATED AS STAND-ALONE COMPONENT. FINAL ASSEMBLY HAS TO COMPLY WITH CORRESPONDING EMC- AND SAFETY-REGULATIONS.

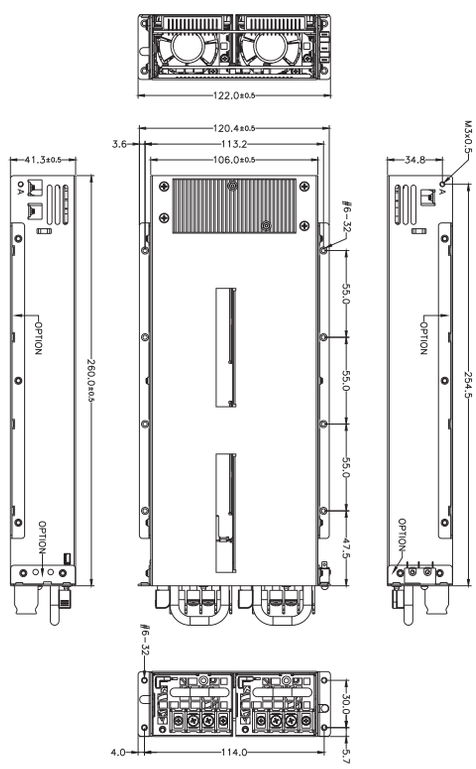

DR1V2-5250V4H

OUTPUT CHARACTERISTICS

MODEL	WATTAGE	OUTPUT					
		+5V	+12V	+3.3V	-5V	-12V	+5VSB
DR1V2-5250V4H	250W	20A	20A	20A	X	0.3A	2.5A
REGULATION LOAD		±5%	±5%	±5%	X	±5%	±5%
RIPPLE AND NOISE		50mV	120mV	50mV	X	120mV	50mV

REMARKS：
POWER MODULE TOTAL OUTPUT POWER OF +5V AND +3.3V NOT EXCEED 150W;
POWER MODULE TOTAL OUTPUT POWER NOT EXCEED 250W

SPECIFICATION：

TEMPERATURE RANGE：OPERATING 0°C ~ 50°C , STORAGE –20°C ~ 80°C

HOLD UP TIME：1 mSEC IN REGULATION LIMIT AT NORMAL INPUT VOLTAGE

EFFICIENCY：TYPICAL 78%(+/-2%) AT -48VDC, 12V/20A 5VSB/2A

POWER GOOD SIGNAL：ON DELAY 100 ms TO 600 ms, OFF DELAY 1 ms

OUTPUT PROTECTION：OPP / OVP / SCP

HOT-SWAPPABLE/HOT PLUGGABLE REDUNDANCY FUNCTION

ISOLATION：BUILT-IN THE POWER MODULE

REMOTE ON/OFF CONTROL

DIMENSION：295mm (D) x 106mm (W) x 41.3mm(H)

THE POWER-SUPPLY IS FOR CHASSIS-ASSEMBLY ONLY AND IS NOT ALLOWED TO BE OPERATED AS STAND-ALONE COMPONENT. FINAL ASSEMBLY HAS TO COMPLY WITH CORRESPONDING EMC- AND SAFETY-REGULATIONS.

INPUT CHARACTERISTICS

VOLTAGE：

-40 ~ -72VDC, NORMAL -48VDC

STEADY-STATE CURRENT：

10/5 AMPS MAXIMUM AT ANY LOW/HIGH RANGE INPUT VOLTAGE

INRUSH CURRENT：

10AMPS @ -48VDC HIGH FREQENCY PEAK AMPLITUDES LASTING LESS THAN 50mS (AT 25 DEGREES AMBIENT COLD START)

START UP CURRENT：

13AMPS MAX. @ -48VDC INPUT (AT 25 DEGREES AMBIENT COLD STAR)

EMI：

IEC61000-3-2, FCC, CISPR 22(EN 55022)

EMS：

EN 61000-4-2 ESD, EN61000-4-4 EFT, EN61000-4-5 SURGE

SAFETY：

TO MEET UL&CUL, TUV, CCC

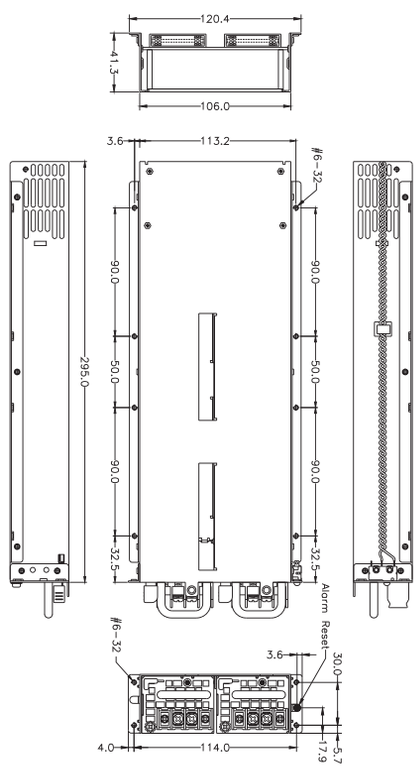

E143756

OUTPUT CHARACTERISTICS

MODEL	WATTAGE	OUTPUT					
		+5V	+12V	+3.3V	-5V	-12V	+5VSB
DM1R2-5500V0H	500W	22A	41A	22A	X	0.5A	3A
REGULATION LOAD		±5%	±5%	±5%	X	±5%	±5%
RIPPLE AND NOISE		50mV	120mV	50mV	X	120mV	50mV

REMARKS：
1.TOTAL MAX OUTPUT OF +5V AND +3.3V NOT EXCEED150W.
2. POWER MODULE TOTAL OUTPUT POWER NOT EXCEED500W

DM1R2-5500V0H

SPECIFICATION：

TEMPERATURE RANGE：OPERATING 0℃～ 50℃ , STOREAGE -20℃ ~80℃

HOLD UP TIME：1mS IN REGULATOIN LIMIT AT NORMAL INPUT VOLTAGE

EFFICIENCY(PER SET)：85% TYPICAL AT -48VDC, HALF LOAD

OUTPUT PROTECTION：OPP / OVP / OCP / SCP

REMOTE ON / OFF CONTROL

REMOTE SENSING DESIGN

BALANCE LOAD SHARING DESIGN

HOT-SWAPPABLE/HOT PLUGGABLE REDUNDANCY FUNCTION

ISOLATION：BUILT-IN THE POWER MODULE

FAULTY ALARM METHODS：LED, BUZZER, TTL SIGNAL

DIMENSION：295(D) * 106(W) * 41.3 (H) mm

THE POWER-SUPPLY IS FOR CHASSIS-ASSEMBLY ONLY AND IS NOT ALLOWED TO BE OPERATED AS STAND-ALONE COMPONENT. FINAL ASSEMBLY HAS TO COMPLY WITH CORRESPONDING EMC- AND SAFETY-REGULATIONS.

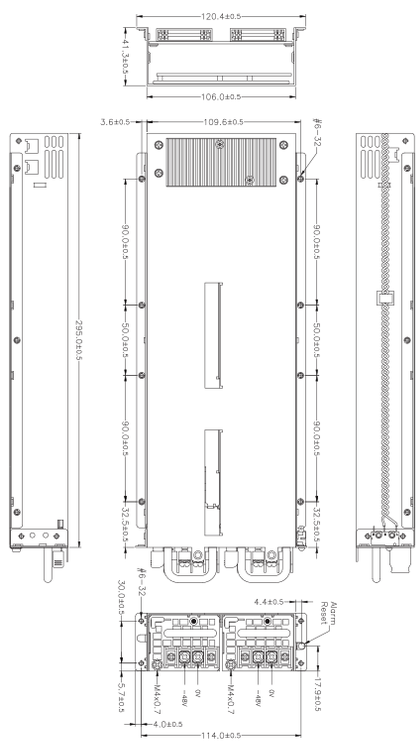

INPUT CHARACTERISTICS

VOLTAGE：

-40 ~ -72VDC

INPUT CURRENT (PER POWER MODULE)：

20A FOR -40VDC

INRUSH CURRENT (PER POWER MODULE)：：

10A MAX.

EMI：

IEC61000-3-2, FCC, CISPR 22(EN 55022)

EMS：

EN 61000-4-2 ESD, EN61000-4-4 EFT, EN61000-4-5 SURGE

SAFETY：

TO MEET UL, CUL, TUV, CCC

E143756

DM1Y2-5150V2H
DM1Y2-5300V2H

OUTPUT CHARACTERISTICS

MODEL	WATTAGE	OUTPUT					
		+5V1 +5V2	+12V	+3.3V	-5V	-12V	+5VSB
DM1Y2-5150V2H	150W	10A	12A	10A	X	0.3A	2A
DM1Y2-5300V2H	300W	18A	24A	18A	X	0.3A	3A
REGULATION LOAD		±5%	±5%	±5%	X	±10%	±5%
RIPPLE AND NOISE		50mV	120mV	50mV	X	120mV	50mV

REMARKS：
TOTAL MAX OUTPUT OF +5V AND +3.3V NOT EXCEED 120W

SPECIFICATION：

TEMPERATURE RANGE：OPERATING 0℃～ 50℃ , STOREAGE -20℃ ~80℃

HOLD UP TIME：1.6mS MIN. AT FULL LOAD & NOMINAL INPUT VOLTAGE

EFFICIENCY：80% TYPICAL · AT FULL LOAD

OUTPUT PROTECTION：OPP / OVP / SCP

REMOTE ON / OFF CONTROL

REMOTE SENSING DESIGN

BALANCE LOAD SHARING DESIGN

HOT-SWAPPABLE/HOT PLUGGABLE REDUNDANCY FUNCTION

N +1 BALANCE LOAD SHARING DESIGN ON 5/12/3.3V CHANNEL

ISOLATION：BUILT-IN THE POWER MODULE

FAULTY ALARM METHODS：LED, BUZZER, TTL SIGNAL

DIMENSION：275(D) * 106(W) * 41.3 (H) mm

THE POWER-SUPPLY IS FOR CHASSIS-ASSEMBLY ONLY AND IS NOT ALLOWED TO BE OPERATED AS STAND-ALONE COMPONENT. FINAL ASSEMBLY HAS TO COMPLY WITH CORRESPONDING EMC- AND SAFETY-REGULATIONS.

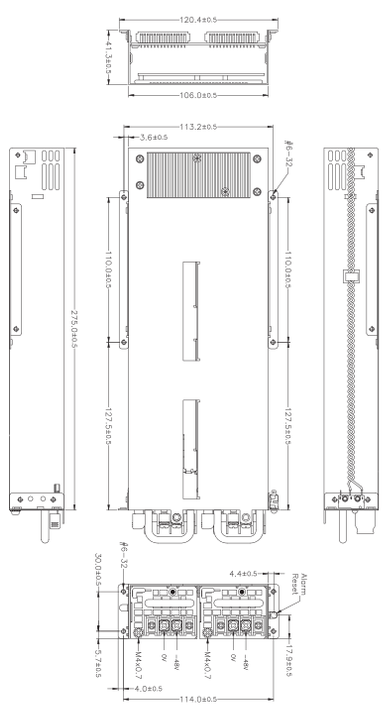

INPUT CHARACTERISTICS

VOLTAGE：

-36 ~ -72VDC

STEADY-STATE CURRENT：

WATTAGE	LOW	HIGH
150W	6A	3A
300W	11A	6A

INRUSH CURRENT：

40A MAX. FOR EACH POWER UNIT

EMI：

IEC61000-3-2, FCC, CISPR 22(EN 55022)

EMS：

EN 61000-4-2 ESD, EN61000-4-4 EFT, EN61000-4-5 SURGE

SAFETY：

TO MEET UL, CUL, TUV, CCC

E143756

BM1U2-5500V4H
BM1U2-5501V4H

OUTPUT CHARACTERISTICS

MODEL	WATTAGE	OUTPUT					
		+5V	+12V	+3.3V	-5V	-12V	+5VSB
BM1U2-5500V4H	500W	22A	41A	22A	X	0.5A	3A
BM1U2-5501V4H	500W	36A	41A	31A	X	0.5A	3A
REGULATION LOAD		±5%	±5%	±5%	X	±5%	±5%
RIPPLE AND NOISE		50mV	120mV	50mV	X	120mV	50mV

REMARKS：
TOTAL MAX OUTPUT OF +5V AND +3.3V NOT EXCEED150W (BMIV2-5500V4H)
+5V AND +3.3V NOT EXCEED210W (BMIV2-5501V4H)

SPECIFICATION：

TEMPERATURE RANGE：OPERATING 0℃ ~ 50℃ , STORAGE -20℃ ~80℃

HOLD UP TIME：1mS IN REGULATOIN LIMIT AT NORMAL INPUT VOLTAGE (DC 28V)

EFFICIENCY(PER SET)：POWER SUPPLY EFFICIENCY TYPICAL 80% AT 28VDCin, FULL LOAD

OUTPUT PROTECTION：OPP / OVP / SCP / OCP

REMOTE ON/OFF CONTROL

BALANCE LOAD SHARING DESIGN

HOT-SWAPPABLE/HOT PLUGGABLE REDUNDANCY FUNCTION

ISOLATION BUILT-IN THE POWER MODULE

WARNING METHOD： BUZZER, TTL SIGNAL

DIMENSION：355mm (D) x 106mm (W) x 41.3mm (H)

THE POWER-SUPPLY IS FOR CHASSIS-ASSEMBLY ONLY AND IS NOT ALLOWED TO BE OPERATED AS STAND-ALONE COMPONENT. FINAL ASSEMBLY HAS TO COMPLY WITH CORRESPONDING EMC- AND SAFETY-REGULATIONS.

INPUT CHARACTERISTICS

VOLTAGE：

19 ~ 36VDC

INPUT CURRENT：

30 / 18A MAXIMUN AT ANY LOW/HIGH RANGE INPUT VOLTAGE

INRUSH CURRENT：

10A MAX. @28VDC INPUT (AT 25DEGREES AMBIENT COLD START)

START UP CURRENT：

24AMPS MAX.@28VDC INPUT (AT 25 DEGREES AMBIENT COLD START)

EMI：

IEC61000-3-2, FCC, CISPR 22(EN 55022)

EMS：

EN 61000-4-2 ESD, EN61000-4-4 EFT, EN61000-4-5 SURGE

SAFETY：

TO MEET UL, CUL, TUV

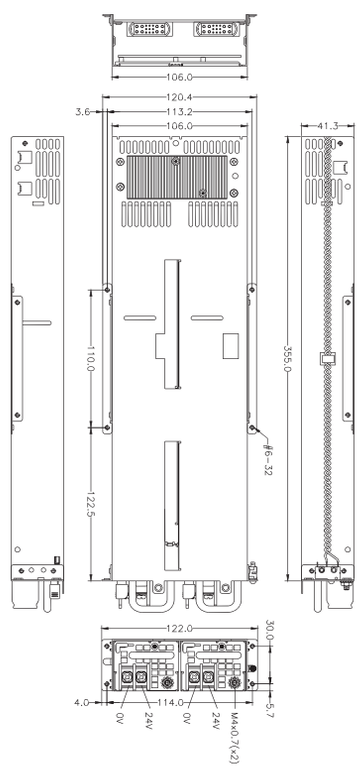

E143756

Micro Redundant

PMBus Optional

DM1S2-5400V4H
DM1S2-5401V4H
DM1S2-5500V4H
DM1S2-5501V4H
DM1S2-5551V4H

INPUT CHARACTERISTICS

VOLTAGE：

-36 ~ -72VDC, NORMAL：-48VDC

STEADY-STATE CURRENT：

400W → -36 ~ -72VDC / 15~7 AMP (11 AMP AT -48VDC);

500W → -36 ~ -72VDC / 19~9 AMP (14 AMP AT -48VDC)

550W → -36 ~ -72VDC / 21~10 AMP (15 AMP AT -48VDC)

INRUSH CURRENT：

40 AMPS @-48VDC (AT 25 DEGREES AMBIENT COLD START)

EMI：

IEC61000-3-2, FCC, CISPR 22(EN 55022)

EMS：

EN 61000-4-2 ESD, EN61000-4-4 EFT, EN61000-4-5 SURGE

SAFETY：

TO MEET UL, CUL, TUV, CCC

E143756

OUTPUT CHARACTERISTICS

MODEL	WATTAGE	OUTPUT					
		+5V	+12V	+3.3V	-5V	-12V	+5VSB
DM1S2-5400V4H	400W	25A	33A	25A	X	0.8A	3.5A
DM1S2-5401V4H	400W	25A	33A	25A	X	0.8A	3.5A
DM1S2-5500V4H	500W	25A	41A	25A	X	0.8A	3.5A
DM1S2-5501V4H	500W	25A	41A	25A	X	0.8A	3.5A
DM1S2-5551V4H	550W	25A	45A	25A	X	0.8A	3.5A
REGULATION LOAD		±5%	±5%	±5%	X	±10%	±5%
RIPPLE AND NOISE		50mV	120mV	50mV	X	120mV	50mV

REMARKS：
+5V AND +3.3V TOTAL OUTPUT MAX：170W

SPECIFICATION：

TEMPERATURE RANGE：OPERATING 0℃ ~ 40℃ , STORAGE -20℃ ~80℃ ; OPERATING EMPERATURE FROM 0℃ SHOULD START FROM DC-48V

HOLD UP TIME：WHEN POWER SHUTDOWN DC OUTPUT 5V MUST BE MAINTAIN 1.6mS IN REGULATION LIMIT AT -48V

EFFICIENCY：>80% AT -48V · FULL LOAD

POWER GOOD SIGNAL：ON DELAY 100mS TO 500Ms

OUTPUT PROTECTION：OPP / OVP / SCP /OCP

REMOTE ON/OFF CONTROL

BALANCE LOAD SHARING DESIGN

HOT-SWAPPABLE/HOT PLUGGABLE REDUNDANCY FUNCTION

ISOLATION BUILT-IN THE POWER MODULE

DIMENSION：355mm (D) x 106mm (W) x 41.3mm (H)

THE POWER-SUPPLY IS FOR CHASSIS-ASSEMBLY ONLY AND IS NOT ALLOWED TO BE OPERATED AS STAND-ALONE COMPONENT. FINAL ASSEMBLY HAS TO COMPLY WITH CORRESPONDING EMC- AND SAFETY-REGULATIONS.

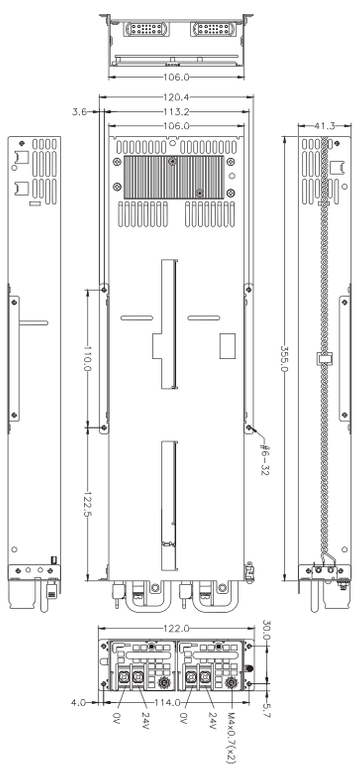

OUTPUT CHARACTERISTICS

MODEL	WATTAGE	OUTPUT					
		+5V	+12V	+3.3V	-5V	-12V	+5VSB
DM1U2-2650V4H	650W	X	54A	X	X	X	3A
REGULATION LOAD		X	±5%	X	X	X	±5%
RIPPLE AND NOISE		X	120mV	X	X	X	50mV

REMARKS：
POWER MODULE TOTAL OUTPUT POWER NOT EXCEED 650W

DM1U2-2650V4H

SPECIFICATION：

TEMPERATURE RANGE：OPERATING 0℃～ 50℃ , STOREAGE -20℃ ~80℃

HOLD UP TIME：1mS IN REGULATION LIMIT AT NORMA INPUT VOLTAGE (DC-48V)

EFFICIENCY(PER SET)：TYPICAL 85% AT -48VDC , FULL LOAD

OUTPUT PROTECTION：OPP / OVP / OCP / SCP

REMOTE ON / OFF CONTROL

REMOTE SENSING DESIGN

BALANCE LOAD SHARING DESIGN

HOT-SWAPPABLE/HOT PLUGGABLE REDUNDANCY FUNCTION

ISOLATION：BUILT-IN THE POWER MODULE

FAULTY ALARM METHODS：LED, BUZZER, TTL SIGNAL

DIMENSION：355mm (D) x 106mm (W) x 41.3mm (H)

THE POWER-SUPPLY IS FOR CHASSIS-ASSEMBLY ONLY AND IS NOT ALLOWED TO BE OPERATED AS STAND-ALONE COMPONENT. FINAL ASSEMBLY HAS TO COMPLY WITH CORRESPONDING EMC- AND SAFETY-REGULATIONS.

INPUT CHARACTERISTICS

VOLTAGE：

-40 ~ -72VDC

FREQUENCY：

0HZ (DC)

STEADY-STATE CURRENT：

20/10 AMPS MAXIMUM AT ANY LOW/HIGH RANGE INPUT VOLTAGE

INRUSH CURRENT：

10A MAX. @-48VDC INPUT (AT 25DEGREES AMBIENT COLD START)

START UP CURRENT：

20 AMPS MAX. @ -48VDC INPUT (AT 25DEGREES AMBIENT COLD START)

EMI：

IEC61000-3-2, FCC, CISPR 22(EN 55022)

EMS：

EN 61000-4-2 ESD, EN61000-4-4 EFT, EN61000-4-5 SURGE

SAFETY：

TO MEET UL, CUL, TUV, CCC

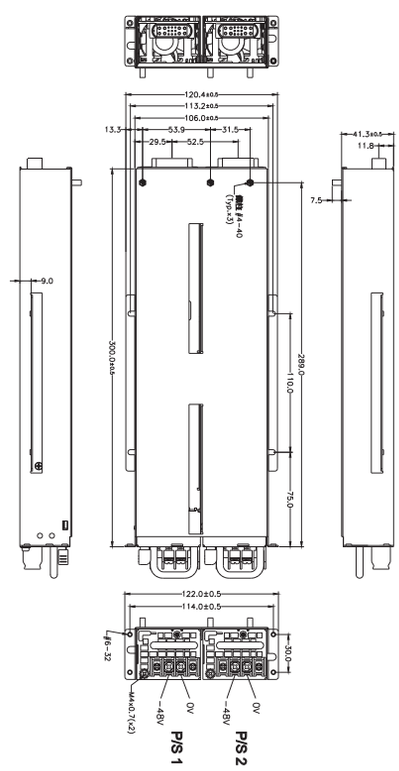

DM1U2-5650V4H
DM1U2-5750V4H

OUTPUT CHARACTERISTICS

MODEL	WATTAGE	OUTPUT					
		+5V	+12V	+3.3V	-5V	-12V	+5VSB
DM1U2-5650V4H	650W	22A	54A	22A	X	0.5A	3A
DM1U2-5750V4H	750W	22A	62A	22A	X	0.5A	3A
REGULATION LOAD		±5%	±5%	±5%	X	±5%	±5%
RIPPLE AND NOISE		50mV	120mV	50mV	X	120mV	50mV

REMARKS：
TOTAL MAX OUTPUT OF +5V AND +3.3V NOT EXCEED150W.

SPECIFICATION：

TEMPERATURE RANGE：OPERATING 0℃～ 50℃ , STOREAGE -20℃ ~80℃

HOLD UP TIME：1mS MIN.

EFFICIENCY：TYPICAL 85% AT -48V (650W) FULL LOAD (PER SET)
TYPICAL 85% AT -48V (750W) FULL LOAD (PER SET)

OUTPUT PROTECTION：OPP / OVP / OCP / SCP

REMOTE ON/OFF CONTROL

REMOTE SENSING DESIGN DESIGN

BALANCE LOAD SHARING DESIGN

HOT-SWAPPABLE/HOT PLUGGABLE REDUNDANCY FUNCTION

ISOLATION BUILT-IN THE POWER MODULE

WARNING METHOD： LED, BUZZER, TTL SIGNAL

DIMENSION：355mm (D) x 106mm (W) x 41.3mm (H)

THE POWER-SUPPLY IS FOR CHASSIS-ASSEMBLY ONLY AND IS NOT ALLOWED TO BE OPERATED AS STAND-ALONE COMPONENT. FINAL ASSEMBLY HAS TO COMPLY WITH CORRESPONDING EMC- AND SAFETY-REGULATIONS.

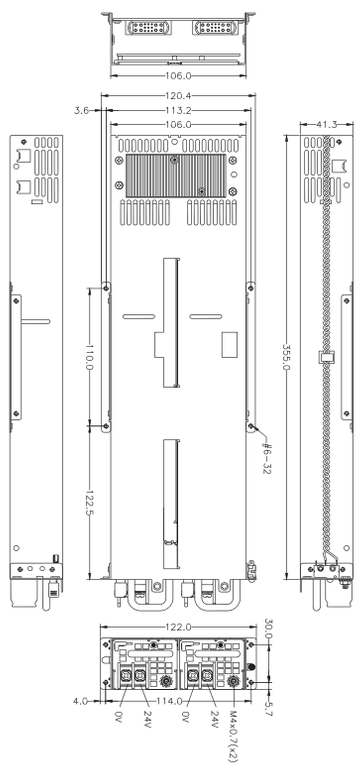

INPUT CHARACTERISTICS

VOLTAGE：

-40 ~ -72VDC

FREQUENCY：

DC

STEADY-STATE CURRENT：

WATTAGE	LOW	HIGH
650W	20A	10A
750W	24A	14A

INRUSH CURRENT：

10A MAX. @-48VDC INPUT(AT 25DEGREES AMBIENT COLD START)

EMI：

FCC, CISPR 22(EN 55022)

EMS：

EN 61000-4-2 ESD, EN61000-4-4 EFT, EN61000-4-5 SURGE

SAFETY：

TO MEET UL, CUL, TUV, CCC

E143756

DM1K2-5A00V0H

OUTPUT CHARACTERISTICS

MODEL	WATTAGE	OUTPUT					
		+5V	+12V	+3.3V	-5V	-12V	+5VSB
DM1K2-5A00V0H	1000W	22A	83A	22A	X	0.5A	3.0A
REGULATION LOAD		±5%	±5%	±5%	X	±5%	±5%
RIPPLE AND NOISE		50mV	120mV	50mV	X	120mV	50mV

REMARKS：
TOTAL MAX OUTPUT OF +5V AND +3.3V NOT EXCEED170W.

SPECIFICATION：

TEMPERATURE RANGE：OPERATING 0℃～ 40℃ , STOREAGE -20℃ ~80℃

HOLD UP TIME：1mS IN REGULATOIN LIMIT AT NORMAL INPUT VOLTAGE (DC-48V)

EFFICIENCY(PER SET)：POWER SUPPLY EFFICIENCY MAX. 88% AT 48VDCin.

OUTPUT PROTECTION：OPP / OVP / SCP / OCP

REMOTE ON / OFF CONTROL

BALANCE LOAD SHARING DESIGN

HOT-SWAPPABLE/HOT PLUGGABLE REDUNDANCY FUNCTION

ISOLATION：BUILT-IN THE POWER MODULE

FAULTY ALARM METHODS：BUZZER, TTL SIGNAL

DIMENSION：400mm (D) x 106mm (W) x 41.3mm (H)

THE POWER-SUPPLY IS FOR CHASSIS-ASSEMBLY ONLY AND IS NOT ALLOWED TO BE OPERATED AS STAND-ALONE COMPONENT. FINAL ASSEMBLY HAS TO COMPLY WITH CORRESPONDING EMC- AND SAFETY-REGULATIONS.

INPUT CHARACTERISTICS

VOLTAGE：

-36 ~ -72VDC

STEADY-STATE CURRENT：

30A @ -48VDC

INRUSH CURRENT：

25A MAX. @-48VDC INPUT (AT 25DEGREES AMBIENT COLD START)

START UP CURRENT：

30 AMPS MAX.@48VDC INPUT (AT 25 DEGREES AMBIENT COLD START)

EMI：

IEC61000-3-2, FCC, CISPR 22(EN 55022)

EMS：

EN 61000-4-2 ESD, EN61000-4-4 EFT, EN61000-4-5 SURGE

SAFETY：

TO MEET UL, CUL, TUV, CCC

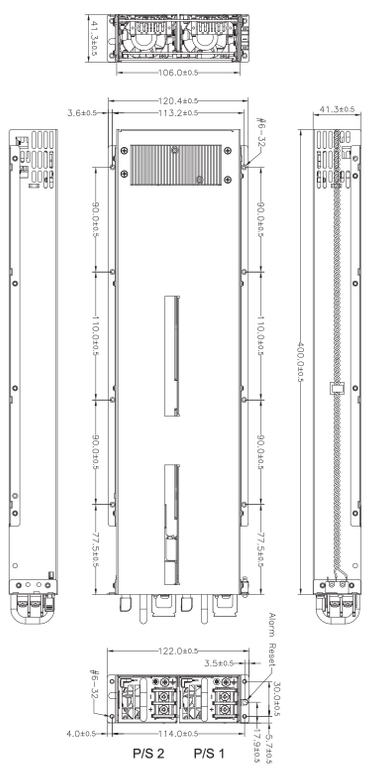

E143756

OUTPUT CHARACTERISTICS

MODEL	WATTAGE	OUTPUT					
		+5V	+12V	+3.3V	-5V	-12V	+5VSB
DR1S2-5300V4H	300W	20A	24A	20A	X	0.5A	2.5A
DR1S2-5380V4H	380W	20A	30A	20A	X	0.5A	2.5A
REGULATION LOAD		±5%	±5%	±5%	X	±10%	±5%
RIPPLE AND NOISE		50mV	120mV	50mV	X	120mV	50mV

REMARKS：
+5V AND +3.3V TOTAL OUTPUT MAX：140W; TOTAL OUTPUT MAX：300W/380W

DR1S2-5300V4H
DR1S2-5380V4H

SPECIFICATION：

TEMPERATURE RANGE：OPERATING 0℃ ~ 50℃ , STORAGE -20℃ ~80℃ ; OPERATING EMPERATURE FROM 0℃ SHOULD START FROM DC-48V

HOLD UP TIME：WHEN POWER SHUTDOWN DC OUTPUT 5V MUST BE MAINTAIN 1.6mS IN REGULATION LIMIT AT -48V

EFFICIENCY：>80% AT -48V · FULL LOAD

POWER GOOD SIGNAL：ON DELAY 100mS TO 500Ms

OUTPUT PROTECTION：OPP / OVP / SCP

REMOTE ON/OFF CONTROL

BALANCE LOAD SHARING DESIGN

HOT-SWAPPABLE/HOT PLUGGABLE REDUNDANCY FUNCTION

ISOLATION：BUILT-IN THE POWER MODULE

DIMENSION：230mm (D) x 176mm (W) x 41.8mm (H)

THE POWER-SUPPLY IS FOR CHASSIS-ASSEMBLY ONLY AND IS NOT ALLOWED TO BE OPERATED AS STAND-ALONE COMPONENT. FINAL ASSEMBLY HAS TO COMPLY WITH CORRESPONDING EMC- AND SAFETY-REGULATIONS.

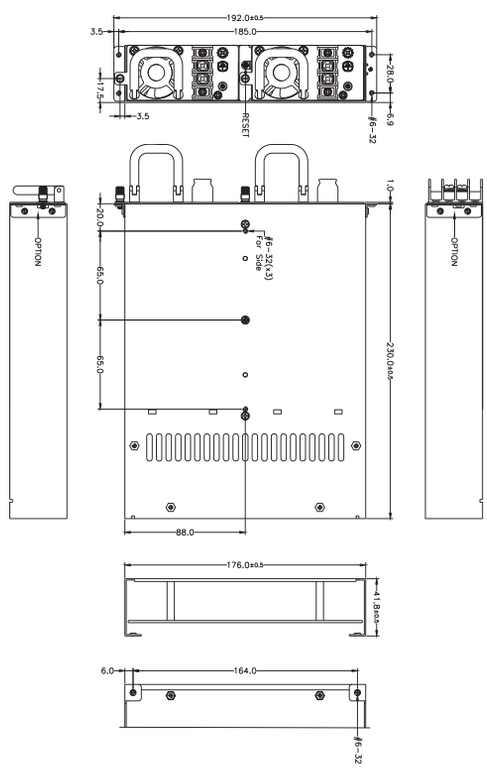

INPUT CHARACTERISTICS

VOLTAGE：

-36 ~ -72VDC, NORMAL：-48VDC

STEADY-STATE CURRENT：

WATTAGE	-36~72VDC
300W	12~6 AMP (9 AMP AT -48VDC)
380W	12~6 AMP (11 AMP AT -48VDC)

INRUSH CURRENT：

70 AMPS @-48VDC (AT 25 DEGREES AMBIENT COLD START)

EMI：

IEC61000-3-2, FCC, CISPR 22(EN 55022)

EMS：

EN 61000-4-2 ESD, EN61000-4-4 EFT, EN61000-4-5 SURGE

SAFETY：

TO MEET UL, CUL, TUV, CCC

E143756

OUTPUT CHARACTERISTICS

MODEL	WATTAGE	OUTPUT					
		+5V	+12V	+3.3V	-5V	-12V	+5VSB
BMRW-5360V4V	360W	25A	28A	25A	X	0.8A	3.5A
REGULATION LOAD		±5%	±5%	±5%	X	±5%	±5%
RIPPLE AND NOISE		50mV	120mV	50mV	X	120mV	50mV

REMARKS：
POWER MODULE TOTAL OUTPUT POWER OF +5V AND +3.3V NOT EXCEED 170W;
TOTAL OUTPUT POWER NOT EXCEED 360W

BMRW-5360V4V

SPECIFICATION：

TEMPERATURE RANGE：OPERATING 0°C ~ 50°C , STORAGE –20°C ~ 80°C

HOLD UP TIME：WHEN POWER SHUTDOWN DC OUTPUT 5V MUST BE MAINTAIN 1mS IN 24V

EFFICIENCY：TYPICAL >80% AT 24VDC, 25%~100% MAX LOAD

POWER GOOD SIGNAL：ON DELAY 100 ms TO 500 ms, OFF DELAY 1 ms

OUTPUT PROTECTION：OPP / OVP / OCP / SCP

REMOTE ON / OFF CONTROL

REMOTE SENSING DESIGN

BALANCE LOAD SHARING DESIGN

HOT-SWAPPABLE/HOT PLUGGABLE REDUNDANCY FUNCTION

ISOLATION：BUILT-IN THE POWER MODULE

FAULTY ALARM METHODS：LED, BUZZER, TTL SIGNAL

DIMENSION：185mm (D) x 150mm (W) x 86mm (H)

THE POWER-SUPPLY IS FOR CHASSIS-ASSEMBLY ONLY AND IS NOT ALLOWED TO BE OPERATED AS STAND-ALONE COMPONENT. FINAL ASSEMBLY HAS TO COMPLY WITH CORRESPONDING EMC- AND SAFETY-REGULATIONS.

INPUT CHARACTERISTICS

VOLTAGE：

18 ~ 36 VDC

STEADY-STATE CURRENT：

18-36VDC/28-13AMP(19AMP AT 24VDC)

INRUSH CURRENT：

60A @24VDC AT 25 DEGREES AMBIENT COLD START

EMI：

IEC61000-3-2, FCC, CISPR 22(EN 55022)

EMS：

EN 61000-4-2 ESD, EN61000-4-4 EFT, EN61000-4-5 SURGE

SAFETY：

TO MEET UL, CUL, TUV, CCC

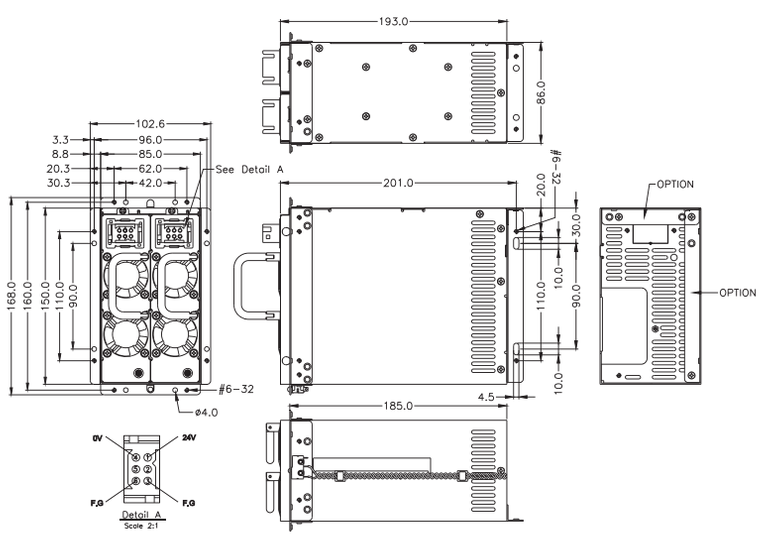

OUTPUT CHARACTERISTICS

MODEL	WATTAGE	OUTPUT					
		+5V	+12V	+3.3V	-5V	-12V	+5VSB
DMRW-5500V4V	500W	25A	41A	25A	X	0.8A	3.5A
DMRW-5600V4V	600W	25A	45A	25A	X	0.8A	3.5A
REGULATION LOAD		±5%	±5%	±5%	X	±5%	±5%
RIPPLE AND NOISE		50mV	120mV	50mV	X	120mV	50mV

REMARKS：
POWER MODULE TOTAL OUTPUT POWER OF +5V AND +3.3V NOT EXCEED 170W

DMRW-5500V4V
DMRW-5600V4V

SPECIFICATION：

TEMPERATURE RANGE：OPERATING 0℃ ~50℃ , STORAGE –20℃ ~80℃

HOLD UP TIME：WHEN POWER SHUTDOWN DC OUTPUT 5V MUST BE MAINTAIN 1mS IN -48V

EFFICIENCY：TYPICAL >80% AT -48VDC, 25%~100% MAX LOAD

OUTPUT PROTECTION：OPP / OVP / OCP / SCP

REMOTE ON/OFF CONTROL

HOT-SWAPPABLE/HOT PLUGGABLE REDUNDANCY FUNCTION

WARNING METHOD： LED, BUZZER, TTL SIGNAL

DIMENSION：185mm (D) x 150mm (W) x 86mm (H)

THE POWER-SUPPLY IS FOR CHASSIS-ASSEMBLY ONLY AND IS NOT ALLOWED TO BE OPERATED AS STAND-ALONE COMPONENT. FINAL ASSEMBLY HAS TO COMPLY WITH CORRESPONDING EMC- AND SAFETY-REGULATIONS.

INPUT CHARACTERISTICS

VOLTAGE：

-36 ~ -72 VDC

INPUT CURRENT：

13A / 16A @ –48VDC

INRUSH CURRENT：

70A AT -48VDC AT 25 DEGREES AMBIENT COLD START

EMI：

FCC, CISPR 22(EN 55022)

EMS：

EN 61000-4-2 ESD, EN61000-4-4 EFT, EN61000-4-5 SURGE

SAFETY：

TO MEET UL, CUL, TUV, CCC

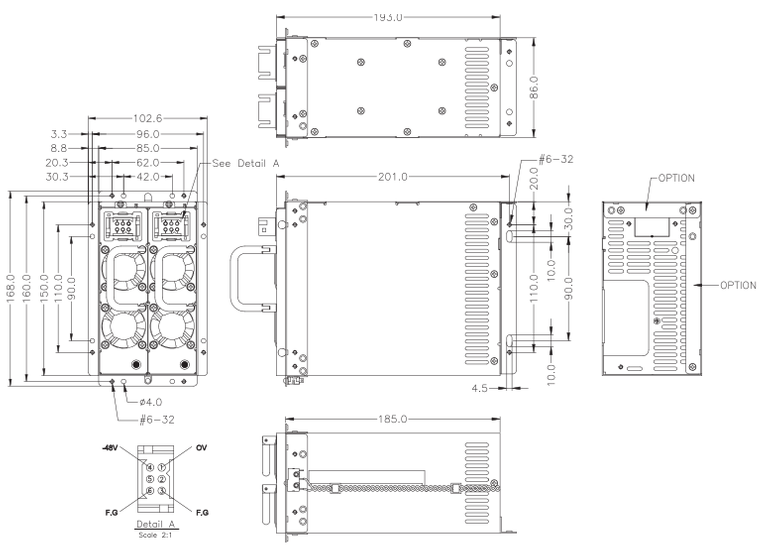

E143756

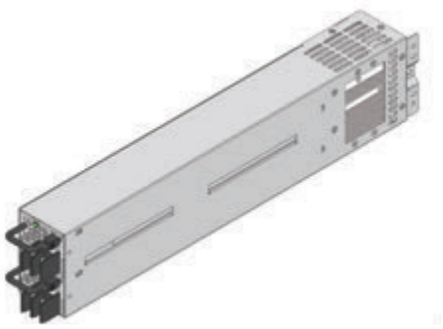

BM1U2-5500V4V
BM1U2-5501V4V

OUTPUT CHARACTERISTICS

MODEL	WATTAGE	OUTPUT					
		+5V	+12V	+3.3V	-5V	-12V	+5VSB
BM1U2-5500V4V	500W	22A	41A	22A	X	0.5A	3A
BM1U2-5501V4V	500W	36A	41A	31A	X	0.5A	3A
REGULATION LOAD		±5%	±5%	±5%	X	±5%	±5%
RIPPLE AND NOISE		50mV	120mV	50mV	X	120mV	50mV

REMARK：
TOTAL MAX OUTPUT OF +5V AND +3.3V NOT EXCEED 150W. (BM1U2-5500V4V)
TOTAL MAX OUTPUT OF +5V AND +3.3V NOT EXCEED 210W. (BM1U2-5501V4V)

SPECIFICATION：

TEMPERATURE RANGE：OPERATING 0℃～ 50℃ , STOREAGE -20℃ ~80℃

EFFICIENCY：TYPICAL 80% AT 28VDCin, FULL LOAD (PER SET)

OUTPUT PROTECTION：OPP / OVP / SCP / OCP

REMOTE ON / OFF CONTROL

BALANCE LOAD SHARING DESIGN

HOT-SWAPPABLE/HOT PLUGGABLE REDUNDANCY FUNCTION

ISOLATION：BUILT-IN THE POWER MODULE

FAULTY ALARM METHODS：BUZZER, TTL SIGNAL

DIMENSION：400mm (D) x 54.5mm (W) x 84.6mm (H)

THE POWER-SUPPLY IS FOR CHASSIS-ASSEMBLY ONLY AND IS NOT ALLOWED TO BE OPERATED AS STAND-ALONE COMPONENT. FINAL ASSEMBLY HAS TO COMPLY WITH CORRESPONDING EMC- AND SAFETY-REGULATIONS.

INPUT CHARACTERISTICS

VOLTAGE：

19 ~ 36VDC

STEADY-STATE CURRENT：

30 / 18A MAXIMUN AT ANY LOW/HIGH RANGE INPUT

VOLTAGE

INRUSH CURRENT：

10AMPS MAX.@28VDC INPUT (AT 25 DEGREES AMBIENT COLD START)

START UP CURRENT：

24AMPS MAX.@28VDC INPUT (AT 25 DEGREES AMBIENT COLD START)

EMI：

IEC61000-3-2, FCC, CISPR 22(EN 55022)

EMS：

EN 61000-4-2 ESD, EN61000-4-4 EFT, EN61000-4-5 SURGE

SAFETY：

TO MEET UL, CUL, TUV

E143756

PMBus Optional

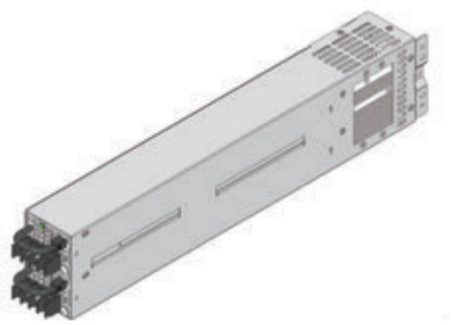

DM1U2-5650V4V
DM1U2-5750V4V

OUTPUT CHARACTERISTICS

MODEL	WATTAGE	OUTPUT					
		+5V	+12V	+3.3V	-5V	-12V	+5VSB
DM1U2-5650V4V	650W	22A	54A	22A	X	0.5A	3A
DM1U2-5750V4V	750W	22A	62A	22A	X	0.5A	3A
REGULATION LOAD		±5%	±5%	±5%	X	±5%	±5%
RIPPLE AND NOISE		50mV	120mV	50mV	X	120mV	50mV

REMARKS：
POWER MODULE TOTAL OUTPUT POWER OF +5V AND +3.3V NOT EXCEED150W.
POWER MODULE TOTAL OUTPUT POWER NOT EXCEED 650W / 750W

SPECIFICATION：

TEMPERATURE RANGE：OPERATING 0℃～ 50℃ , STOREAGE -20℃ ~80℃

EFFICIENCY(PER SET)：TYPICAL 85% AT -48V, FULL LOAD

OUTPUT PROTECTION：OPP / OVP / OCP / SCP

REMOTE ON / OFF CONTROL

REMOTE SENSING DESIGN

BALANCE LOAD SHARING DESIGN

HOT-SWAPPABLE/HOT PLUGGABLE REDUNDANCY FUNCTION

ISOLATION：BUILT-IN THE POWER MODULE

FAULTY ALARM METHODS：LED, BUZZER, TTL SIGNAL

DIMENSION：400mm (D) x 54.5mm (W) x 84.6mm (H)

THE POWER-SUPPLY IS FOR CHASSIS-ASSEMBLY ONLY AND IS NOT ALLOWED TO BE OPERATED AS STAND-ALONE COMPONENT. FINAL ASSEMBLY HAS TO COMPLY WITH CORRESPONDING EMC- AND SAFETY-REGULATIONS.

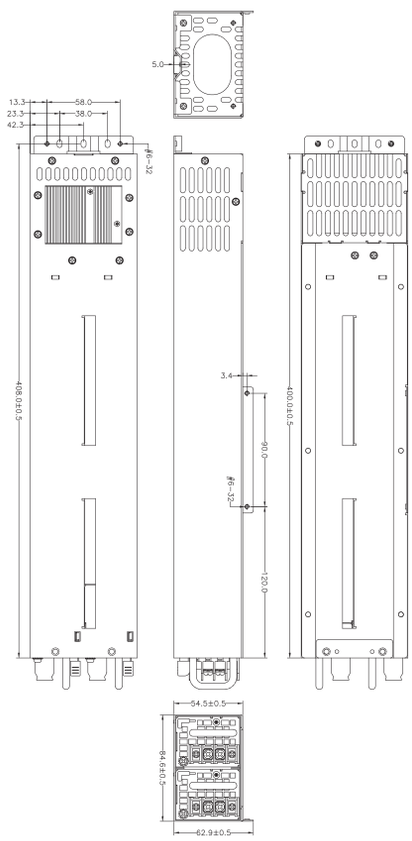

INPUT CHARACTERISTICS

VOLTAGE：

-40 ~ -72VDC

FREQUENCY：

0HZ (DC)

STEADY-STATE CURRENT：

WATTAGE	LOW	HIGH
650W	20A	10A
750W	24A	14A

INRUSH CURRENT：

10A MAX. @-48VDC INPUT(AT 25DEGREES AMBIENT COLD START)

START UP CURRENT：

20 AMPS MAX. @ -48VDC INPUT(AT 25DEGREES AMBIENT COLD START)

EMI：

IEC61000-3-2, FCC, CISPR 22(EN 55022)

EMS：

EN 61000-4-2 ESD, EN61000-4-4 EFT, EN61000-4-5 SURGE

SAFETY：

TO MEET UL, CUL, TUV

E143756

DPSS2-5A00V3V

OUTPUT CHARACTERISTICS

MODEL	WATTAGE	OUTPUT					
		+5V	+12V	+3.3V	-5V	-12V	+5VSB
DPSS2-5A00V3V	1000W	22A	83A	22A	X	0.5A	4A
REGULATION LOAD		±5%	±5%	±5%	X	±5%	±5%
RIPPLE AND NOISE		50mV	120mV	50mV	X	120mV	50mV

REMARKS：
POWER MODULE TOTAL OUTPUT POWER OF +5V & +3.3V NOT EXCEED 150W

SPECIFICATION：

TEMPERATURE RANGE：OPERATING：0°C ~ 40°C ; STORAGE： -20°C ~ 80°C

EFFICIENCY：TYPICAL 83% AT –48VDC FULL LOAD (PER SET)

POWER GOOD SIGNAL：ON DELAY 100 mS TO 550 mS

OUTPUT PROTECTION：OPP / OVP / SCP / OCP

FAULTY ALARM METHODS：LED, BUZZER, TTL SIGNAL

HOT-SWAPPABLE/HOT PLUGGABLE REDUNDANCY FUNCTION

ISOLATION：BUILT-IN THE POWER MODULE

REMOTE SENSING DESIGN

DIMENSION：385mm (D) x 65mm (W) x 84mm (H)

THE POWER-SUPPLY IS FOR CHASSIS-ASSEMBLY ONLY AND IS NOT ALLOWED TO BE OPERATED AS STAND-ALONE COMPONENT. FINAL ASSEMBLY HAS TO COMPLY WITH CORRESPONDING EMC- AND SAFETY-REGULATIONS.

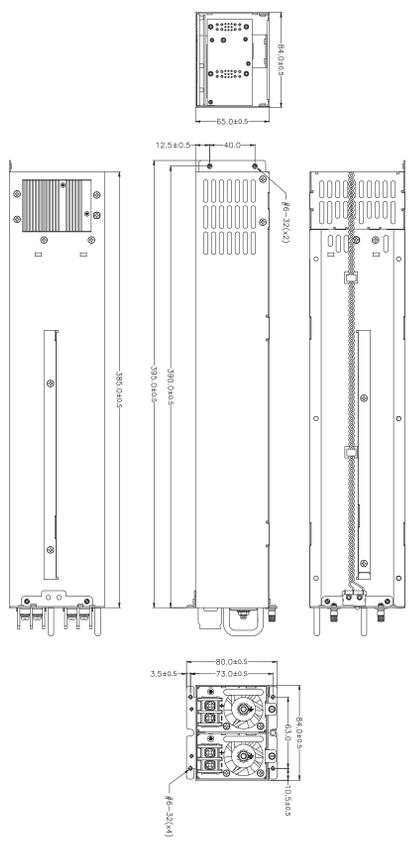

INPUT CHARACTERISTICS

VOLTAGE：

DC -36 V ~ -72 V

INRUSH CURRENT：

10A MAXIMUM @ -48VDC

START UP CURRENT：

LESS THAN 30A FOR EACH MODULE

EMI：

IEC61000-3-2, FCC, CISPR 22(EN 55022)

EMS：

EN 61000-4-2 ESD, EN61000-4-4 EFT, EN61000-4-5 SURGE

SAFETY：

TO MEET UL&CUL, TUV

E143756

OUTPUT CHARACTERISTICS

MODEL	WATTAGE	OUTPUT					
		+5V	+12V	+3.3V	-5V	-12V	+5VSB
DR1S2-5300V4V	300W	20A	24A	20A	X	0.5A	2.5A
DR1S2-5380V4V	380W	20A	30A	20A	X	0.5A	2.5A
REGULATION LOAD		±5%	±5%	±5%	X	±10%	±5%
RIPPLE AND NOISE		50mV	120mV	50mV	X	120mV	50mV

REMARKS：
+5V AND +3.3V TOTAL OUTPUT MAX：140W; TOTAL OUTPUT MAX：300W/380W

DR1S2-5300V4V
DR1S2-5380V4V

SPECIFICATION：

TEMPERATURE RANGE：OPERATING 0℃ ~ 50℃ , STORAGE -20℃ ~80℃

EFFICIENCY：>80% AT -48V · FULL LOAD

OUTPUT PROTECTION：OPP / OVP / SCP

REMOTE ON/OFF CONTROL

BALANCE LOAD SHARING DESIGN

HOT-SWAPPABLE/HOT PLUGGABLE REDUNDANCY FUNCTION

ISOLATION：BUILT-IN THE POWER MODULE

DIMENSION：207mm (D) x 85mm (W) x 84mm (H)

THE POWER-SUPPLY IS FOR CHASSIS-ASSEMBLY ONLY AND IS NOT ALLOWED TO BE OPERATED AS STAND-ALONE COMPONENT. FINAL ASSEMBLY HAS TO COMPLY WITH CORRESPONDING EMC- AND SAFETY-REGULATIONS.

INPUT CHARACTERISTICS

VOLTAGE：

-36 ~ -72VDC, NORMAL：-48VDC

STEADY-STATE CURRENT：

WATTAGE	-36~-72VDC
300W	12~6 AMP (9 AMP AT -48VDC)
380W	15~7 AMP (11 AMP AT -48VDC)

INRUSH CURRENT：

70 AMPS @-48VDC (AT 25 DEGREES AMBIENT COLD START)

EMI：

IEC61000-3-2, FCC, CISPR 22(EN 55022)

EMS：

EN 61000-4-2 ESD, EN61000-4-4 EFT, EN61000-4-5 SURGE

SAFETY：

TO MEET UL, CUL, TUV, CCC

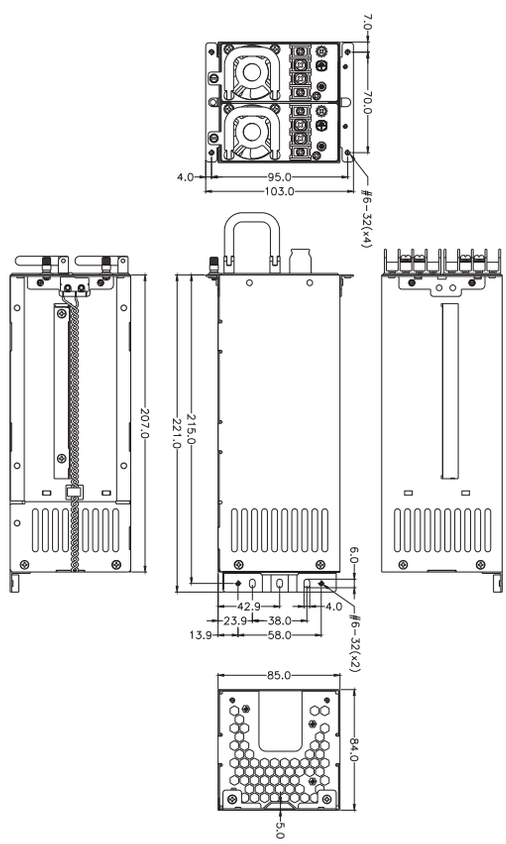

E143756

OUTPUT CHARACTERISTICS

MODEL	WATTAGE	OUTPUT					
		+5V	+12V	+3.3V	-5V	-12V	+5VSB
BM1P2-5250V4V	250W	32A	20A	25A	X	0.5A	3.5A
REGULATION LOAD		±5%	±5%	±5%	X	±10%	±5%
RIPPLE AND NOISE		50mV	120mV	50mV	X	120mV	50mV

REMARK：
TOTAL MAX OUTPUT OF +5V AND +3.3V NOT EXCEED 170W.

BM1P2-5250V4V

SPECIFICATION：

TEMPERATURE RANGE：OPERATING 0℃ ~ 40℃ , STOREAGE -20℃ ~80℃

EFFICIENCY(PER SET)：POWER SUPPLY EFFICIENCY TYPICAL 80% AT 24VDCin, FULL LOAD

OUTPUT PROTECTION：OPP / OVP / SCP / OCP

REMOTE ON / OFF CONTROL

BALANCE LOAD SHARING DESIGN

HOT-SWAPPABLE/HOT PLUGGABLE REDUNDANCY FUNCTION

ISOLATION：BUILT-IN THE POWER MODULE

FAULTY ALARM METHODS：BUZZER, TTL SIGNAL

DIMENSION：217mm (D) x 85mm (W) x 84mm (H)

THE POWER-SUPPLY IS FOR CHASSIS-ASSEMBLY ONLY AND IS NOT ALLOWED TO BE OPERATED AS STAND-ALONE COMPONENT. FINAL ASSEMBLY HAS TO COMPLY WITH CORRESPONDING EMC- AND SAFETY-REGULATIONS.

INPUT CHARACTERISTICS

VOLTAGE：

19 ~ 36VDC

STEADY-STATE CURRENT：

18~9 AMP (14A@24VDC)

INRUSH CURRENT：

50A MAX. @24VDC INPUT (AT 25DEGREES AMBIENT COLD START)

EMI：

IEC61000-3-2, FCC, CISPR 22(EN 55022)

EMS：

EN 61000-4-2 ESD, EN61000-4-4 EFT, EN61000-4-5 SURGE

SAFETY：

TO MEET UL, CUL, TUV, CCC

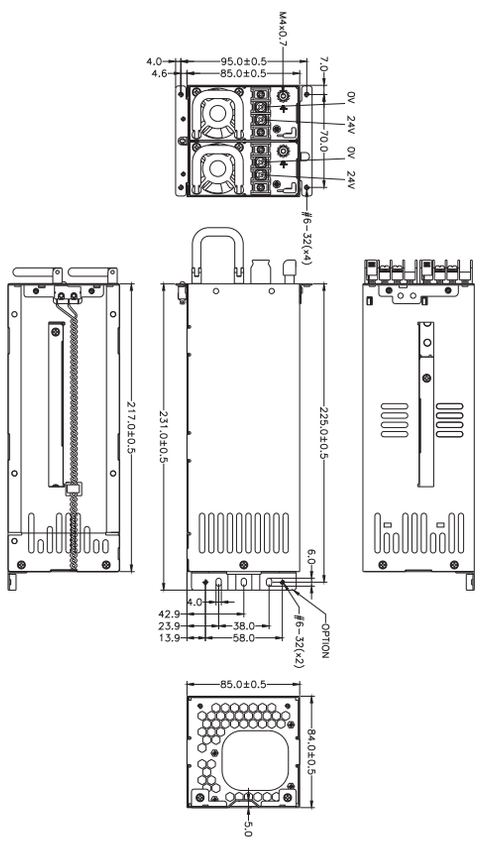

DC 2U REDUNDANT

OUTPUT CHARACTERISTICS

MODEL	WATTAGE	OUTPUT					
		+5V	+12V	+3.3V	-5V	-12V	+5VSB
DM1P2-5500V4V	500W	32A	41A	25A	X	0.5A	3.5A
REGULATION LOAD		±5%	±5%	±5%	X	±10%	±5%
RIPPLE AND NOISE		50mV	120mV	50mV	X	120mV	50mV

REMARKS：
TOTAL MAX OUTPUT OF +5V AND +3.3V NOT EXCEED170W.

DM1P2-5500V4V

SPECIFICATION：

TEMPERATURE RANGE：OPERATING 0℃ ~ 40℃ · STORAGE -20℃ ~ 80℃

EFFICIENCY：POWER SUPPLY EFFICIENCY TYPICAL 80% AT 48VDCin, FULL LOAD

OUTPUT PROTECTION：OPP / OVP / SCP /OCP

BALANCE LOAD SHARING DESIGN

REMOTE ON/OFF CONTROL

HOT-SWAPPABLE/HOT PLUGGABLE REDUNDANCY FUNCTION

DIMENSION：217mm (D) x 85mm (W) x 84mm (H)

THE POWER-SUPPLY IS FOR CHASSIS-ASSEMBLY ONLY AND IS NOT ALLOWED TO BE OPERATED AS STAND-ALONE COMPONENT. FINAL ASSEMBLY HAS TO COMPLY WITH CORRESPONDING EMC- AND SAFETY-REGULATIONS.

INPUT CHARACTERISTICS

VOLTAGE：

-36 ~ -72 VDC, NORMAL -48VDC

INPUT CURRENT：

-36 ~ -72VDC/19~9AMP (14AMP AT-48 VDC)

INRUSH CURRENT：

40A AT -48VDC (AT 25 DEGREES AMBIEND COLD START)

EMI：

FCC, CISPR 22(EN 55022)

EMS：

EN 61000-4-2 ESD, EN61000-4-4 EFT, EN61000-4-5 SURGE

SAFETY：

TO MEET UL&CUL, TUV

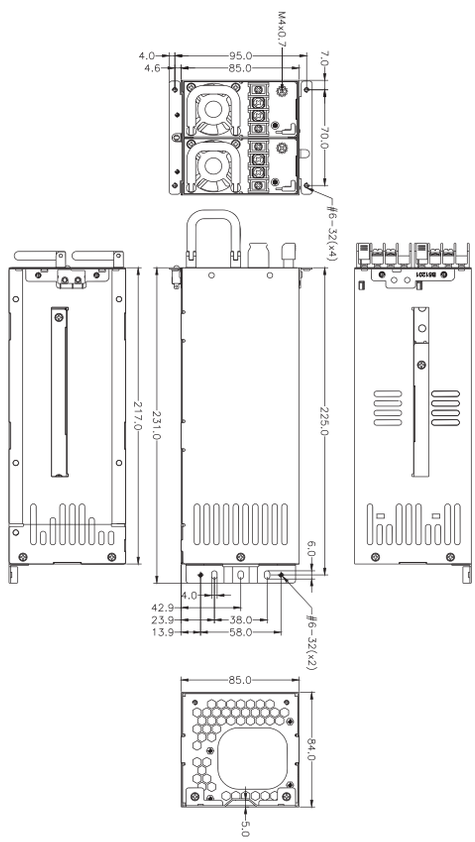

OUTPUT CHARACTERISTICS

MODEL	WATTAGE	OUTPUT					
		+5V	+12V	+3.3V	-5V	-12V	+5VSB
DM1X2-5700V0V	700W	32A	57A	25A	X	0.8A	3.5A
REGULATION LOAD		±5%	±5%	±5%	X	±5%	±5%
RIPPLE AND NOISE		50mV	120mV	50mV	X	120mV	50mV

REMARKS：
+5V AND +3.3V TOTAL OUTPU NOT EXCEED 170W

DM1X2-5700V0V

SPECIFICATION：

TEMPERATURE RANGE：OPERATING 0℃～ 40℃ · STORAGE -20℃～ 80℃

EFFICIENCY：86% MAX · AT INPUT -48V FULL LOAD

OUTPUT PROTECTION：OPP / OVP / SCP /OCP

BALANCE LOAD SHARING DESIGN

REMOTE ON/OFF CONTROL

HOT-SWAPPABLE/HOT PLUGGABLE REDUNDANCY FUNCTION

ISOLATION：BUILT-IN THE POWER MODULE

DIMENSION：240mm (D) x 101mm (W) x 84mm (H)

THE POWER-SUPPLY IS FOR CHASSIS-ASSEMBLY ONLY AND IS NOT ALLOWED TO BE OPERATED AS STAND-ALONE COMPONENT. FINAL ASSEMBLY HAS TO COMPLY WITH CORRESPONDING EMC- AND SAFETY-REGULATIONS.

INPUT CHARACTERISTICS

VOLTAGE：

-36 ～ -72 VDC, NORMAL -48VDC

INPUT CURRENT：

25~13A @ -48VDC

INRUSH CURRENT：

32A AT -48VDC (AT 25 DEGREES AMBIEND COLD START)

START UP CURRENT 45A MAX. @-36VDC INPUT CAT 25 DEGREES AMBIENT COLD START

EMI：

FCC, CISPR 22(EN 55022)

EMS：

EN 61000-4-2 ESD, EN61000-4-4 EFT, EN61000-4-5 SURGE

SAFETY：

TO MEET UL, CUL, TUV, CCC

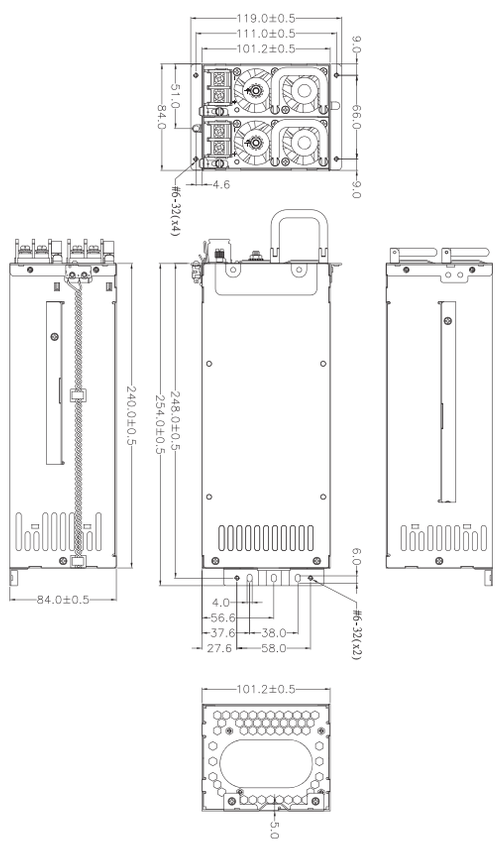

OUTPUT CHARACTERISTICS

MODEL	WATTAGE	OUTPUT					
		+5V	+12V	+3.3V	-5V	-12V	+5VSB
BM1Z2-5360V3V	360W	24A	28A	24A	X	0.8A	3.5A
REGULATION LOAD		±5%	±5%	±5%	X	±5%	±5%
RIPPLE AND NOISE		50mV	120mV	50mV	X	120mV	50mV

BM1Z2-5360V3V

SPECIFICATION：

TEMPERATURE RANGE：OPERATING 0℃ ~ 50℃ · STORAGE -20℃ ~ 80℃

EFFICIENCY：TYPICAL >80% AT 24VDC, FULL LOAD

OUTPUT PROTECTION：OPP / OVP / OCP / SCP

BALANCE LOAD SHARING DESIGN

REMOTE ON/OFF CONTROL

HOT-SWAPPABLE/HOT PLUGGABLE REDUNDANCY FUNCTION

ISOLATION：BUILT-IN THE POWER MODULE

DIMENSION：265mm (D) x 101mm (W) x 84mm (H)

THE POWER-SUPPLY IS FOR CHASSIS-ASSEMBLY ONLY AND IS NOT ALLOWED TO BE OPERATED AS STAND-ALONE COMPONENT. FINAL ASSEMBLY HAS TO COMPLY WITH CORRESPONDING EMC- AND SAFETY-REGULATIONS.

INPUT CHARACTERISTICS

VOLTAGE：

18 ~ 36 VDC, NORMAL 24VDC

INRUSH CURRENT：

60A @24VDC

STEADY-STATE CURRENT：

29AMPS MAXIMUM AT 18 TO 36V DC

EMI：

FCC, CISPR 22(EN 55022)

EMS：

EN 61000-4-2 ESD, EN61000-4-4 EFT, EN61000-4-5 SURGE

SAFETY：

TO MEET UL, CUL, TUV

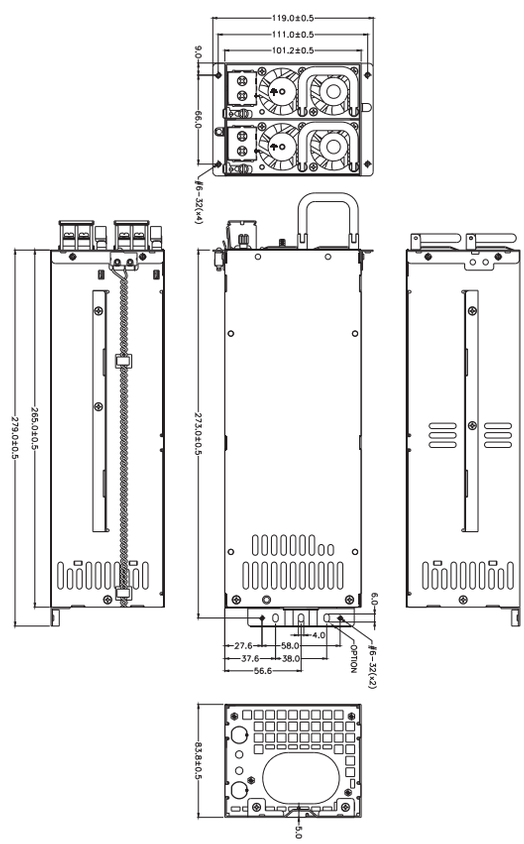

DM1Z2-5500V3V
DM1Z2-5550V3V

OUTPUT CHARACTERISTICS

MODEL	WATTAGE	OUTPUT					
		+5V	+12V	+3.3V	-5V	-12V	+5VSB
DM1Z2-5500V3V	500W	24A	40A	24A	X	0.8A	3A
DM1Z2-5550V3V	550W	24A	45A	24A	X	0.8A	3A
REGULATION LOAD		±5%	±5%	±5%	X	±5%	±5%
RIPPLE AND NOISE		50mV	120mV	50mV	X	120mV	50mV

SPECIFICATION：

TEMPERATURE RANGE：OPERATING 0℃～ 50℃ · STORAGE -20℃～ 80℃

EFFICIENCY：80% TYPICAL · AT INPUT -48V FULL LOAD

OUTPUT PROTECTION：OPP / OVP / SCP / OCP

BALANCE LOAD SHARING DESIGN

REMOTE ON/OFF CONTROL

HOT-SWAPPABLE/HOT PLUGGABLE REDUNDANCY FUNCTION

DIMENSION：265(D) X 101(W) X 84(H) mm

THE POWER-SUPPLY IS FOR CHASSIS-ASSEMBLY ONLY AND IS NOT ALLOWED TO BE OPERATED AS STAND-ALONE COMPONENT. FINAL ASSEMBLY HAS TO COMPLY WITH CORRESPONDING EMC- AND SAFETY-REGULATIONS.

INPUT CHARACTERISTICS

VOLTAGE：

-36 ～ -72 VDC, NORMAL -48VDC

INPUT CURRENT：

20A MAX. AT -36~72VDC

INRUSH CURRENT：

30A AT -48VDC (AT 25 DEGREES AMBIEND COLD START)

EMI：

FCC, CISPR 22(EN 55022)

EMS：

EN 61000-4-2 ESD, EN61000-4-4 EFT, EN61000-4-5 SURGE

SAFETY：

TO MEET UL&CUL, TUV, CCC

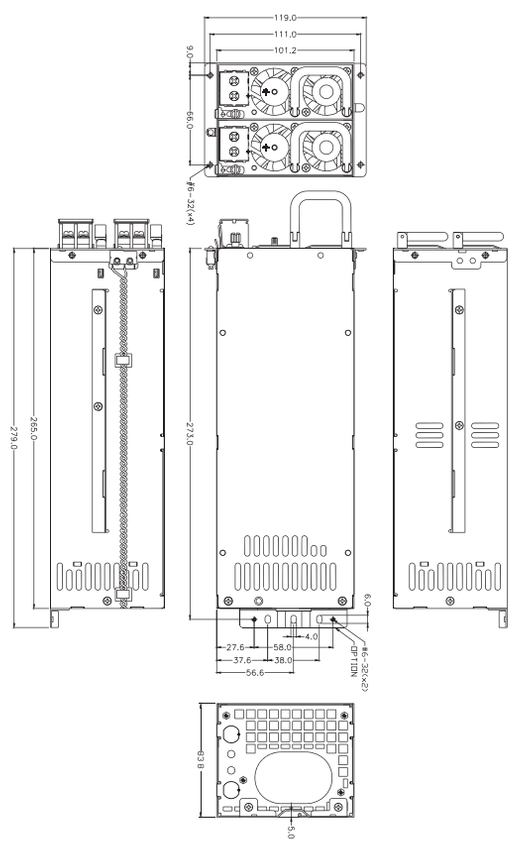

BR2G-5420V4V
BR2G-5460V4V

OUTPUT CHARACTERISTICS

MODEL	WATTAGE	OUTPUT					
		+5V	+12V	+3.3V	-5V	-12V	+5VSB
BR2G-5420V4V	420W	25A	33A	25A	X	0.8A	3.5A
BR2G-5460V4V	460W	25A	37A	25A	X	0.8A	3.5A
REGULATION LOAD		±5%	±5%	±5%	X	±10%	±5%
RIPPLE AND NOISE		50mV	120mV	50mV	X	120mV	50mV

REMARKS：
+5V AND +3.3V TOTAL OUTPUT MAX：170W

SPECIFICATION：

TEMPERATURE RANGE：OPERATING 0℃～ 40℃ · STORAGE -20℃～ 80℃

EFFICIENCY：>80% TYPICAL AT 24VDC FULL LOAD

OUTPUT PROTECTION：OPP / OVP / SCP /OCP

BALANCE LOAD SHARING DESIGN

REMOTE ON/OFF CONTROL

HOT-SWAPPABLE/HOT PLUGGABLE REDUNDANCY FUNCTION

DIMENSION：276mm (D) x 101mm (W) x 82mm (H)

THE POWER-SUPPLY IS FOR CHASSIS-ASSEMBLY ONLY AND IS NOT ALLOWED TO BE OPERATED AS STAND-ALONE COMPONENT. FINAL ASSEMBLY HAS TO COMPLY WITH CORRESPONDING EMC- AND SAFETY-REGULATIONS.

INPUT CHARACTERISTICS

VOLTAGE：

18 ~ 36 VDC, NORMAL 24VDC

STEADY-STATE CURRENT：

18~36VDC / 35-16AMP (22/24AMP @ 24VDC)

INRUSH CURRENT：

30A @ 24VDC (AT 25 DEGREES AMBIEND COLD START)

EMI：

FCC, CISPR 22(EN 55022)

EMS：

EN 61000-4-2 ESD, EN61000-4-4 EFT, EN61000-4-5 SURGE

SAFETY：

TO MEET UL&CUL, TUV

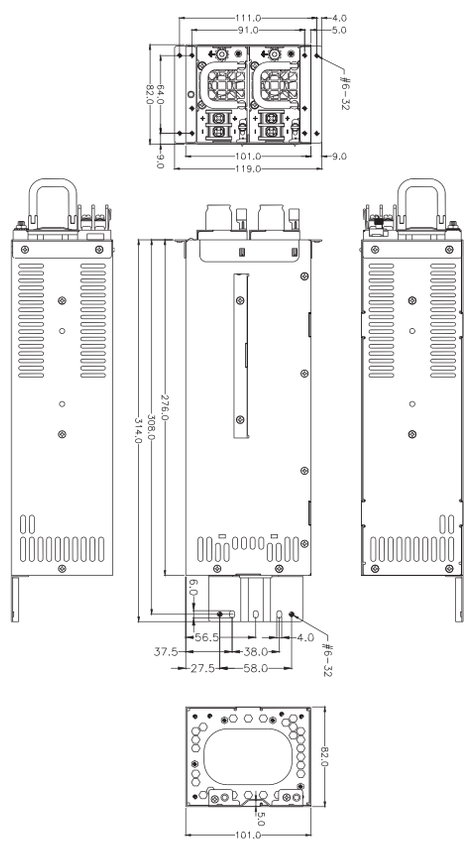

E143756

DR2G-5500V4V
DR2G-5600V4V

OUTPUT CHARACTERISTICS

MODEL	WATTAGE	OUTPUT					
		+5V	+12V	+3.3V	-5V	-12V	+5VSB
DR2G-5500V4V	500W	25A	40A	25A	X	0.8A	3.5A
DR2G-5600V4V	600W	25A	48A	25A	X	0.8A	3.5A
REGULATION LOAD		±5%	±5%	±5%	X	±10%	±5%
RIPPLE AND NOISE		50mV	120mV	50mV	X	120mV	50mV

REMARKS：
+5V AND +3.3V TOTAL OUTPUT MAX：170W

SPECIFICATION：

TEMPERATURE RANGE：OPERATING：0℃ ~40℃ , STORAGE： -20℃ ~80℃ ,

EFFICIENCY：>80% TYPICAL AT -48VDC FULL LOAD

OUTPUT PROTECTION：OPP / OVP / SCP / OCP

BALANCE LOAD SHARING DESIGN

REMOTE ON/OFF CONTROL

HOT-SWAPPABLE/HOT PLUGGABLE REDUNDANCY FUNCTION

WARNING METHOD：LED, BUZZER, TTL SIGNAL

DIMENSION：276mm (D) x 101mm (W) x 82mm (H)

THE POWER-SUPPLY IS FOR CHASSIS-ASSEMBLY ONLY AND IS NOT ALLOWED TO BE OPERATED AS STAND-ALONE COMPONENT. FINAL ASSEMBLY HAS TO COMPLY WITH CORRESPONDING EMC- AND SAFETY-REGULATIONS.

INPUT CHARACTERISTICS

VOLTAGE：

-36 ~ -72 VDC, NORMAL -48VDC

INPUT CURRENT：

WATTAGE	-48VDC (-36 ~ -72VDC)
500W	25~10AMP (13AMP AT -48VDC)
600W	25~10AMP (15AMP AT -48VDC)

INRUSH CURRENT：

35A @ -48VDC (AT 25 DEGREES AMBIEND COLD START)

EMI：

FCC, CISPR 22(EN 55022)

EMS：

EN 61000-4-2 ESD, EN61000-4-4 EFT, EN61000-4-5 SURGE

SAFETY：

TO MEET UL&CUL, TUV

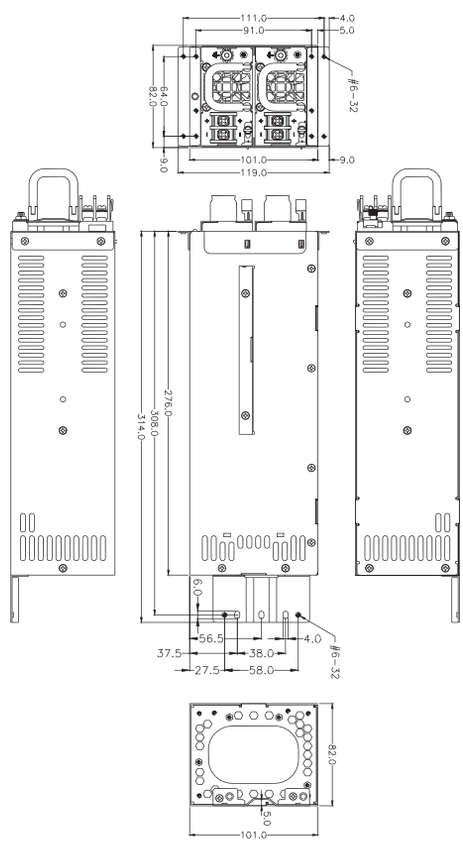

E143756

OUTPUT CHARACTERISTICS

MODEL	WATTAGE	OUTPUT					
		+5V	+12V	+3.3V	-5V	-12V	+5VSB
DR2G-5800V	800W	32A	65A	32A	X	0.8A	3.5A
REGULATION LOAD		±5%	±5%	±5%	X	±10%	±5%
RIPPLE AND NOISE		50mV	120mV	50mV	X	120mV	50mV

REMARKS：
+5V AND +3.3V TOTAL OUTPUT MAX：190W

DR2G-5800V

SPECIFICATION：

TEMPERATURE RANGE：OPERATING：0℃ ~50℃ , STORAGE： -20℃ ~80

EFFICIENCY：>80% TYPICAL AT -48VDC FULL LOAD

OUTPUT PROTECTION：OPP / OVP / SCP / OCP

BALANCE LOAD SHARING DESIGN

REMOTE ON/OFF CONTROL

HOT-SWAPPABLE/HOT PLUGGABLE REDUNDANCY FUNCTION

ISOLATION BUILT-IN THE POWER MODULE

WAWARNING METHOD：LED, BUZZER, TTL SIGNAL

DIMENSION：340mm (D) x 101mm (W) x 82mm (H)

THE POWER-SUPPLY IS FOR CHASSIS-ASSEMBLY ONLY AND IS NOT ALLOWED TO BE OPERATED AS STAND-ALONE COMPONENT. FINAL ASSEMBLY HAS TO COMPLY WITH CORRESPONDING EMC- AND SAFETY-REGULATIONS.

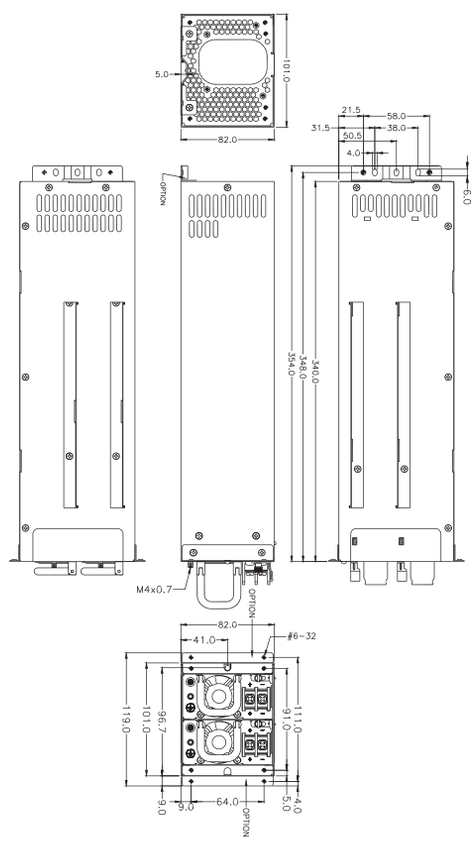

INPUT CHARACTERISTICS

VOLTAGE：

-39 ~ -72 VDC

STEADY-STATE CURRENT：

-39 ~ -72VDC / 26-14 AMP(21 AMP @ -48VDC)

INRUSH CURRENT：

70A @ -48VDC (AT 25 DEGREES AMBIEND COLD START)

EMI：

FCC, CISPR 22(EN 55022)

EMS：

EN 61000-4-2 ESD, EN61000-4-4 EFT, EN61000-4-5 SURGE

SAFETY：

TO MEET UL, CUL, TUV, GOST

E143756

BMTW2-5600V3V

OUTPUT CHARACTERISTICS

MODEL	WATTAGE	OUTPUT					
		+5V	+12V	+3.3V	-5V	-12V	+5VSB
BMTW2-5600V3V	600W	32A	50A	36A	X	0.8A	3.5A
REGULATION LOAD		±5%	±5%	±5%	X	±5%	±5%
RIPPLE AND NOISE		60mV	120mV	50mV	X	120mV	50mV

REMARKS：
* +5V AND +3.3V TOTAL OUTPUT MAX：200W
* TOTAL OUTPUT MAX：600W (AT 18V ONLY 550W)

INPUT CHARACTERISTICS

VOLTAGE：

19 ~ 36VDC

STEADY-STATE CURRENT：

19~36VDC/45~21 AMP

INRUSH CURRENT：

50A MAX. @24VDC INPUT (AT 25DEGREES AMBIENT COLD START)

EMI：

IEC61000-3-2, FCC, CISPR 22(EN 55022)

EMS：

EN 61000-4-2 ESD, EN61000-4-4 EFT, EN61000-4-5 SURGE

SAFETY：

TO MEET UL, CUL, TUV, CCC

SPECIFICATION：

TEMPERATURE RANGE：OPERATING 0℃ ~ 40℃ ,STORAGE -20℃ ~ 80℃

EFFICIENCY：TYPICAL >80% @ 24VDC, 30~100% MAX LOAD

OUTPUT PROTECTION：OPP / OVP / SCP / OCP

BALANCE LOAD SHARING DESIGN

REMOTE ON/OFF CONTROL

HOT-SWAPPABLE/HOT PLUGGABLE REDUNDANCY FUNCTION

ISOLATION：BUILT-IN THE POWER MODULE

WARNING METHOD：LED, BUZZER, TTL SIGNAL

DIMENSION：300mm (D) x 101mm (W) x 84mm (H)

THE POWER-SUPPLY IS FOR CHASSIS-ASSEMBLY ONLY AND IS NOT ALLOWED TO BE OPERATED AS STAND-ALONE COMPONENT. FINAL ASSEMBLY HAS TO COMPLY WITH CORRESPONDING EMC- AND SAFETY-REGULATIONS.

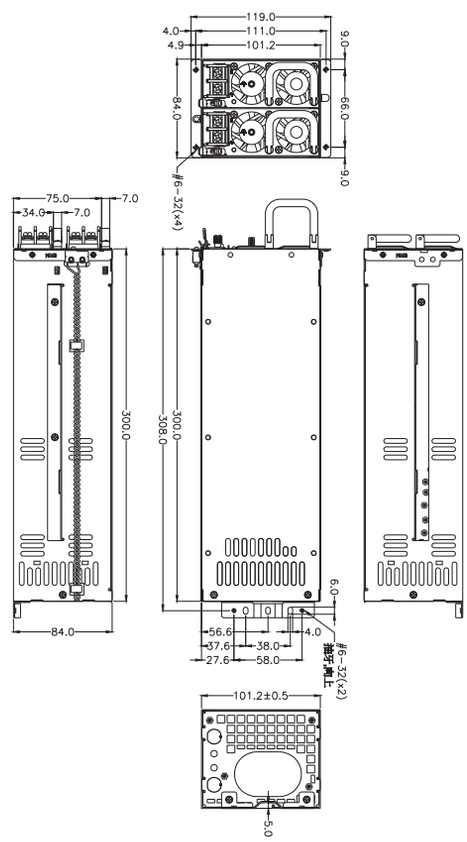

DC 2U REDUNDANT

DM1W2-5600V3V
DM1W2-5650V3V
DM1W2-5700V3V

OUTPUT CHARACTERISTICS

MODEL	WATTAGE	OUTPUT					
		+5V	+12V	+3.3V	-5V	-12V	+5VSB
DM1W2-5600V3V	600W	32A	45A	36A	X	0.8A	3.5A
DM1W2-5650V3V	650W	32A	50A	36A	X	0.8A	3.5A
DM1W2-5700V3V	700W	32A	55A	36A	X	0.8A	3.5A
REGULATION LOAD		±5%	±5%	±5%	X	±10%	±5%
RIPPLE AND NOISE		50mV	120mV	50mV	X	120mV	50mV

REMARKS :
+5V AND +3.3V TOTAL OUTPU NOT EXCEED 200W

SPECIFICATION :

TEMPERATURE RANGE : OPERATING 0℃ ~ 50℃ · STORAGE -20℃ ~ 80℃

EFFICIENCY : 80% TYPICAL · AT INPUT -48V FULL LOAD

OUTPUT PROTECTION : OPP / OVP / SCP /OCP

BALANCE LOAD SHARING DESIGN

REMOTE ON/OFF CONTROL

HOT-SWAPPABLE/HOT PLUGGABLE REDUNDANCY FUNCTION

DIMENSION : 300mm (D) x 101mm (W) x 84mm (H)

THE POWER-SUPPLY IS FOR CHASSIS-ASSEMBLY ONLY AND IS NOT ALLOWED TO BE OPERATED AS STAND-ALONE COMPONENT. FINAL ASSEMBLY HAS TO COMPLY WITH CORRESPONDING EMC- AND SAFETY-REGULATIONS.

INPUT CHARACTERISTICS

VOLTAGE :

-36 ~ -72 VDC, NORMAL -48VDC

INPUT CURRENT :

16/17/17A @ -48VDC

INRUSH CURRENT :

30A AT -48VDC (AT 25 DEGREES AMBIEND COLD START)

EMI :

FCC, CISPR 22(EN 55022)

EMS :

EN 61000-4-2 ESD, EN61000-4-4 EFT, EN61000-4-5 SURGE

SAFETY :

TO MEET UL, CUL, TUV, CCC

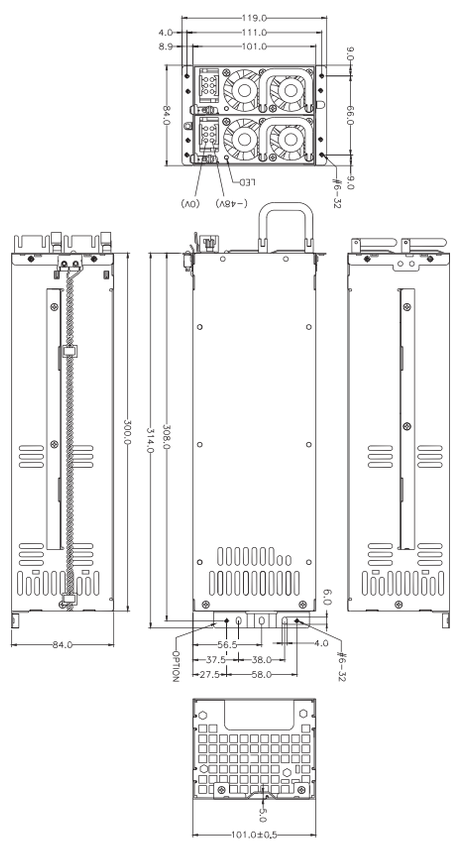

E143756

OUTPUT CHARACTERISTICS

MODEL	WATTAGE	OUTPUT					
		+5V	+12V	+3.3V	-5V	-12V	+5VSB
BG1W2-5600V3V	600W	25A	50A	25A	X	0.8A	3.5A
REGULATION LOAD		±5%	±5%	±5%	X	±10%	±5%
RIPPLE AND NOISE		50mV	120mV	50mV	X	120mV	50mV

REMARKS：
POWER MODULE TOTAL OUTPUT POWER OF +5V AND +3.3V NOT EXCEED 190W;
TOTAL OUTPUT MAX 600W (AT 18V ONLY 550W)

BG1W2-5600V3V

SPECIFICATION：

TEMPERATURE RANGE：OPERATING 0℃ ~ 40℃ , STORAGE –20℃ ~ 80℃

EFFICIENCY：TYPICAL >80% AT 24VDC, FULL LOAD

OUTPUT PROTECTION：OPP / OVP / OCP / SCP

REMOTE ON / OFF CONTROL

REMOTE SENSING DESIGN

BALANCE LOAD SHARING DESIGN

HOT-SWAPPABLE/HOT PLUGGABLE REDUNDANCY FUNCTION

ISOLATION：BUILT-IN THE POWER MODULE

FAULTY ALARM METHODS：LED, BUZZER, TTL SIGNAL

DIMENSION：300mm (D) x 101.2mm (W) x 84mm (H)

THE POWER-SUPPLY IS FOR CHASSIS-ASSEMBLY ONLY AND IS NOT ALLOWED TO BE OPERATED AS STAND-ALONE COMPONENT. FINAL ASSEMBLY HAS TO COMPLY WITH CORRESPONDING EMC- AND SAFETY-REGULATIONS.

INPUT CHARACTERISTICS

VOLTAGE：

19 ~ 36 VDC

STEADY-STATE CURRENT：

19-36VDC/44-21AMP(32AMP AT 24VDC)

INRUSH CURRENT：

50A @24VDC AT 25 DEGREES AMBIENT COLD START

EMI：

FCC, CISPR 22(EN 55022)

EMS：

EN 61000-4-2 ESD, EN61000-4-4 EFT, EN61000-4-5 SURGE

SAFETY：

TO MEET UL, CUL, TUV

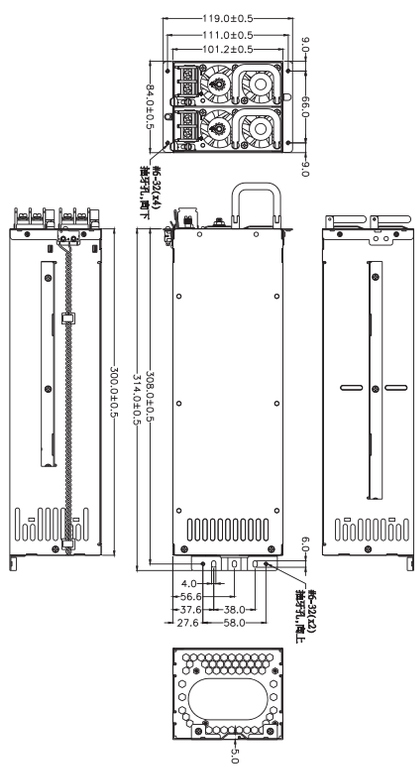

DG1W2-5660V3V
DG1W2-5760V3V
DG1W2-5860V3V
DG1W2-5960V3V
DG1W2-5A10V3V

INPUT CHARACTERISTICS

VOLTAGE：

-36 ~ -72 VDC

STEADY-STATE CURRENT：

WATTAGE	-48VDC (-36 ~ -72VDC)
660W	24~12AMP (21AMP AT -48VDC)
760W	28~14AMP (21AMP AT -48VDC)
860W	31~15AMP (23AMP AT -48VDC)
960W	35~16AMP (26AMP AT -48VDC)
1010W	36~17AMP (26AMP AT -48VDC)

INRUSH CURRENT：

80AMPS @ -48VDC

EMI：

FCC, CISPR 22(EN 55022)

EMS：

EN 61000-4-2 ESD, EN61000-4-4 EFT, EN61000-4-5 SURGE

SAFETY：

TO MEET UL, CUL, TUV, CCC

E143756

OUTPUT CHARACTERISTICS

MODEL	WATTAGE	OUTPUT					
		+5V	+12V	+3.3V	-5V	-12V	+5VSB
DG1W2-5660V3V	660W	25A	55A	25A	X	0.8A	3.5A
DG1W2-5760V3V	760W	32A	62A	32A	X	0.8A	3.5A
DG1W2-5860V3V	860W	32A	70A	32A	X	0.8A	3.5A
DG1W2-5960V3V	960W	32A	78A	32A	X	0.8A	3.5A
DG1W2-5A10V3V	1010W	32A	83A	32A	X	0.8A	3.5A
REGULATION LOAD		±5%	±5%	±5%	X	±10%	±5%
RIPPLE AND NOISE		50mV	120mV	50mV	X	120mV	50mV

REMARKS：
+5V AND +3.3V TOTAL OUTPUT MAX：190W

SPECIFICATION：

TEMPERATURE RANGE：OPERATING 0°C ~40°C ,STORAGE -20°C ~80°C

EFFICIENCY：TYPICAL >80% @ DC-48 INPUT, FULL LOAD

OUTPUT PROTECTION：OPP / OVP / SCP / OCP

BALANCE LOAD SHARING DESIGN

REMOTE ON/OFF CONTROL

HOT-SWAPPABLE/HOT PLUGGABLE REDUNDANCY FUNCTION

ISOLATION BUILT-IN THE POWER MODULE

DIMENSION：300mm (D) x 101.2mm (W) x 84mm (H)

THE POWER-SUPPLY IS FOR CHASSIS-ASSEMBLY ONLY AND IS NOT ALLOWED TO BE OPERATED AS STAND-ALONE COMPONENT. FINAL ASSEMBLY HAS TO COMPLY WITH CORRESPONDING EMC- AND SAFETY-REGULATIONS.

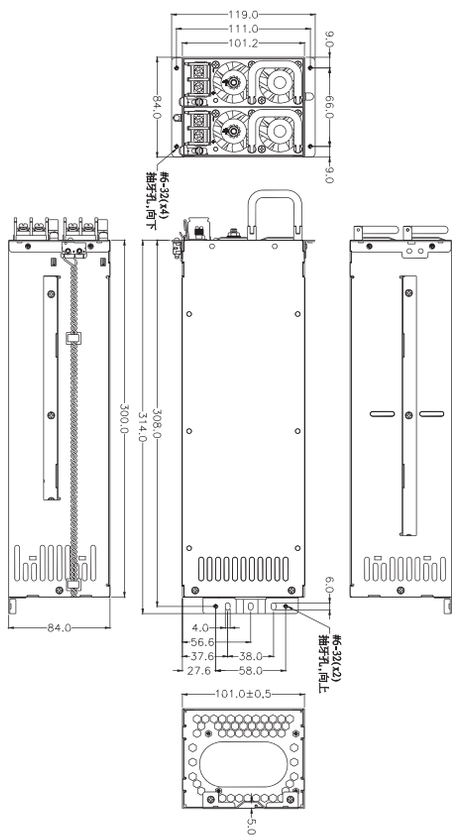

DC 2U REDUNDANT

DMTW2-5660V3V
DMTW2-5820V3V

OUTPUT CHARACTERISTICS

MODEL	WATTAGE	OUTPUT					
		+5V	+12V	+3.3V	-5V	-12V	+5VSB
DMTW2-5660V3V	660W	32A	50A	36A	X	0.8A	3.5A
DMTW2-5820V3V	820W	32A	67A	36A	X	0.8A	3.5A
REGULATION LOAD		±5%	±5%	±5%	X	±5%	±5%
RIPPLE AND NOISE		50mV	120mV	50mV	X	120mV	50mV

REMARKS：
POWER MODULE TOTAL OUTPUT POWER OF +5V AND +3.3V NOT EXCEED 200W.
POWER MODULE TOTAL OUTPUT POWER NOT EXCEED 660W / 820W

SPECIFICATION：

TEMPERATURE RANGE：OPERATING 0℃ ~ 45℃ , STOREAGE -20℃ ~80℃

EFFICIENCY(PER SET)：TYPICAL >80% AT 48VDC, 30~100% MAX LOAD

OUTPUT PROTECTION：OPP / OVP / OCP / SCP

REMOTE ON / OFF CONTROL

BALANCE LOAD SHARING DESIGN

HOT-SWAPPABLE/HOT PLUGGABLE REDUNDANCY FUNCTION

ISOLATION：BUILT-IN THE POWER MODULE

FAULTY ALARM METHODS：LED, BUZZER, TTL SIGNAL

DIMENSION：300mm (D) x 101.2mm (W) x 84mm (H)

THE POWER-SUPPLY IS FOR CHASSIS-ASSEMBLY ONLY AND IS NOT ALLOWED TO BE OPERATED AS STAND-ALONE COMPONENT. FINAL ASSEMBLY HAS TO COMPLY WITH CORRESPONDING EMC- AND SAFETY-REGULATIONS.

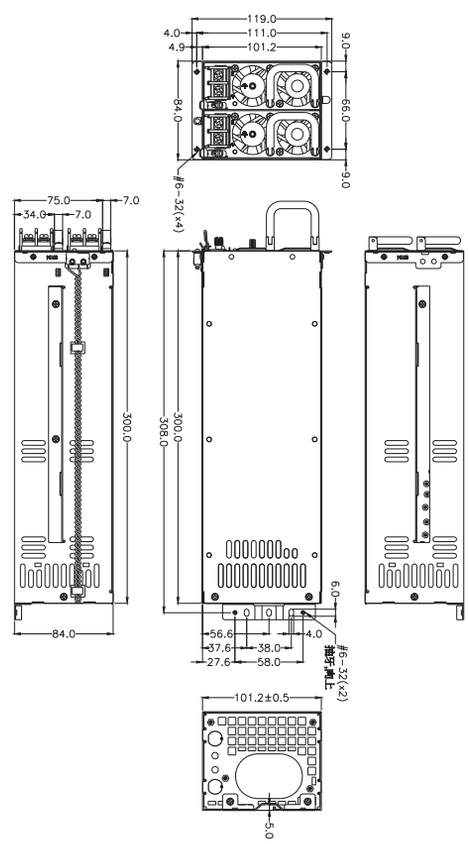

INPUT CHARACTERISTICS

VOLTAGE：

-36 ~ -72 VDC

STEADY-STATE CURRENT：

25/13 AMPS MAXIMUM AT ANY LOW/HIGH RANGE INPUT

VOLTAGE (660W)

30/15 AMPS MAXIMUM AT ANY LOW/HIGH RANGE INPUT

VOLTAGE (820W)

INRUSH CURRENT：

35A MAX. @-48VDC INPUT(AT 25DEGREES AMBIENT COLD START FOR EACH POWER UNIT)

EMI：

IEC61000-3-2, FCC, CISPR 22(EN 55022)

EMS：

EN 61000-4-2 ESD, EN61000-4-4 EFT, EN61000-4-5 SURGE

SAFETY：

TO MEET UL, CUL, TUV, CCC

E143756

DM1L2-5600V3V
DM1L2-5650V3V
DM1L2-5700V3V

OUTPUT CHARACTERISTICS

MODEL	WATTAGE	OUTPUT					
		+5V	+12V	+3.3V	-5V	-12V	+5VSB
DM1L2-5600V3V	600W	32A	45A	36A	X	0.8A	3.5A
DM1L2-5650V3V	650W	32A	50A	36A	X	0.8A	3.5A
DM1L2-5700V3V	700W	32A	55A	36A	X	0.8A	3.5A
REGULATION LOAD		±5%	±5%	±5%	X	±10%	±5%
RIPPLE AND NOISE		50mV	120mV	50mV	X	120mV	50mV

REMARKS：
+5V AND +3.3V TOTAL OUTPU NOT EXCEED 200W

SPECIFICATION：

TEMPERATURE RANGE：OPERATING 0℃ ~ 50℃ · STORAGE -20℃ ~ 80℃

EFFICIENCY：80% TYPICAL · AT INPUT -48V FULL LOAD

OUTPUT PROTECTION：OPP / OVP / SCP / OCP

BALANCE LOAD SHARING DESIGN

REMOTE ON/OFF CONTROL

HOT-SWAPPABLE/HOT PLUGGABLE REDUNDANCY FUNCTION

DIMENSION：330(D) X 101.2(W) X 84(H) mm

THE POWER-SUPPLY IS FOR CHASSIS-ASSEMBLY ONLY AND IS NOT ALLOWED TO BE OPERATED AS STAND-ALONE COMPONENT. FINAL ASSEMBLY HAS TO COMPLY WITH CORRESPONDING EMC- AND SAFETY-REGULATIONS.

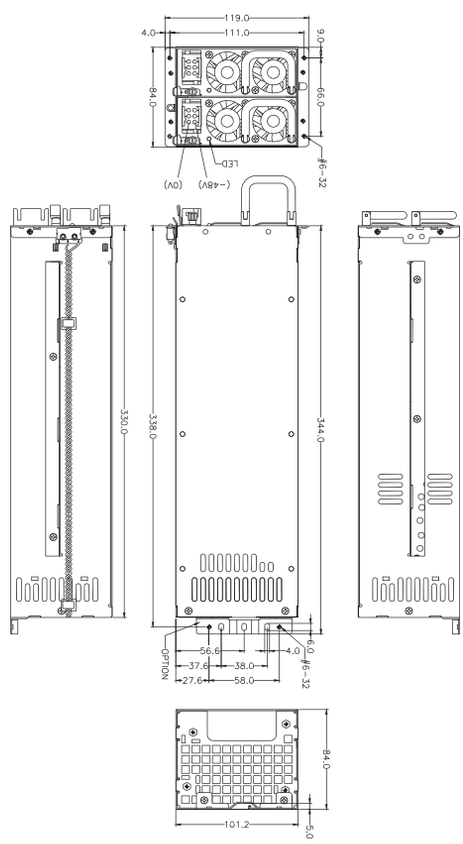

INPUT CHARACTERISTICS

VOLTAGE：

-36 ~ -72 VDC, NORMAL -48VDC

STEADY-STATE CURRENT：

16/17/19 AMP @-48VDC

INRUSH CURRENT：

30A AMP @-48VDC

EMI：

FCC, CISPR 22(EN 55022)

EMS：

EN 61000-4-2 ESD, EN61000-4-4 EFT, EN61000-4-5 SURGE

SAFETY：

TO MEET UL, CUL, TUV, CCC

E143756

DPSS2-5A00V3H

OUTPUT CHARACTERISTICS

MODEL	WATTAGE	OUTPUT					
		+5V	+12V	+3.3V	-5V	-12V	+5VSB
DPSS2-5A00V3H	1000W	22A	83A	22A	X	0.5A	4A
REGULATION LOAD		±5%	±5%	±5%	X	±5%	±5%
RIPPLE AND NOISE		50mV	120mV	50mV	X	120mV	70mV

REMARKS：
TOTAL MAX OUTPUT OF +5V AND +3.3V NOT EXCEED 150W

SPECIFICATION：

TEMPERATURE RANGE：OPERATING 0°C ~40°C , STORAGE –20°C ~80°C

EFFICIENCY：TYPICAL 83% AT DC-48 INPUT, FULL LOAD (PER SET)

OUTPUT PROTECTION：OPP / OVP / OCP / SCP

REMOTE ON/OFF CONTROL

BALANCE LOAD SHARING DESIGN

HOT-SWAPPABLE/HOT PLUGGABLE REDUNDANCY FUNCTION

ISOLATION BUILT-IN THE POWER MODULE

DIMENSION：360mm (D) x 127mm (W) x 44mm (H)

THE POWER-SUPPLY IS FOR CHASSIS-ASSEMBLY ONLY AND IS NOT ALLOWED TO BE OPERATED AS STAND-ALONE COMPONENT. FINAL ASSEMBLY HAS TO COMPLY WITH CORRESPONDING EMC- AND SAFETY-REGULATIONS.

INPUT CHARACTERISTICS

VOLTAGE：

-36 ~ -72 VDC, NORMAL -48VDC

INPUT CURRENT：

30A @ -48VDC

INRUSH CURRENT：

10AMPS MAX @-48VDC INPUT

EMI：

FCC, CISPR 22(EN 55022)

EMS：

EN 61000-4-2 ESD, EN61000-4-4 EFT, EN61000-4-5 SURGE

SAFETY：

TO MEET UL, CUL, TUV

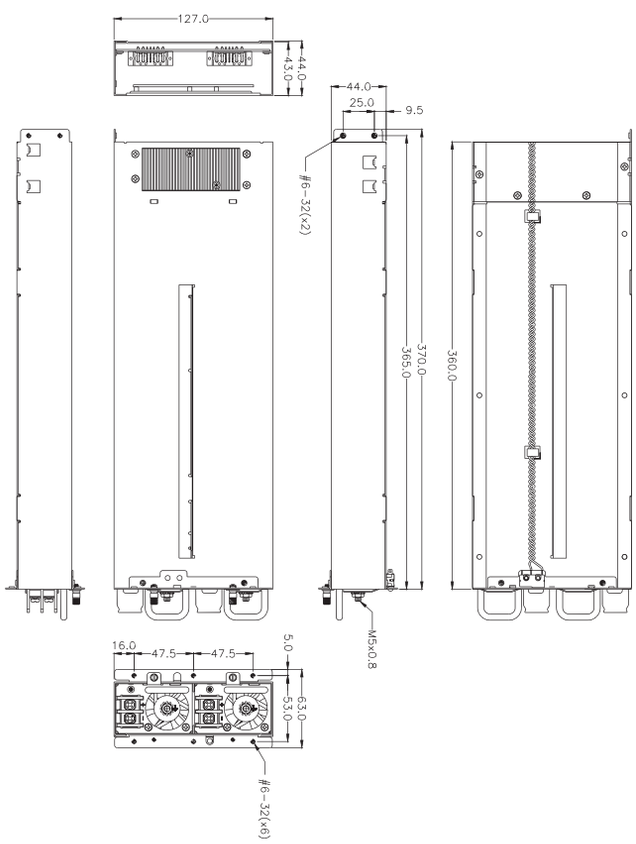

E143756

DMTW4-5M10V3H

OUTPUT CHARACTERISTICS

MODEL	WATTAGE	OUTPUT					
		+5V	+12V	+3.3V	-5V	-12V	+5VSB
DMTW4-5M10V3H	2210W	86A	180A	97A	X	1.6A	7A
REGULATION LOAD		±5%	±5%	±5%	X	±5%	±5%
RIPPLE AND NOISE		50mV	120mV	50mV	X	120mV	50mV

REMARK：
POWER MODULE TOTAL OUTPUT POWER OF +5V AND +3.3V NOT EXCEED 540W.
POWER MODULE TOTAL OUTPUT POWER NOT EXCEED 2210W

SPECIFICATION：

TEMPERATURE RANGE：OPERATING 0℃ ~ 45℃ , STOREAGE -20℃ ~80℃

EFFICIENCY：TYPICAL >80% AT 48VDC, 50~100% MAX LOAD

OUTPUT PROTECTION：OPP / OVP / OCP / SCP

REMOTE ON / OFF CONTROL

BALANCE LOAD SHARING DESIGN

HOT-SWAPPABLE/HOT PLUGGABLE REDUNDANCY FUNCTION

ISOLATION：BUILT-IN THE POWER MODULE

FAULTY ALARM METHODS：LED, BUZZER, TTL SIGNAL

DIMENSION：340(D) * 422(W) * 43 (H) mm

THE POWER-SUPPLY IS FOR CHASSIS-ASSEMBLY ONLY AND IS NOT ALLOWED TO BE OPERATED AS STAND-ALONE COMPONENT. FINAL ASSEMBLY HAS TO COMPLY WITH CORRESPONDING EMC- AND SAFETY-REGULATIONS.

INPUT CHARACTERISTICS

VOLTAGE：

-36 ~ -72VDC

STEADY-STATE CURRENT：

30/15 AMPS MAXIMUM AT ANY LOW/HIGH RANGE INPUT VOLTAGE

INRUSH CURRENT：

35A MAX. @-48VDC INPUT(AT 25DEGREES AMBIENT COLD START FOR EACH POWER UNIT)

EMI：

IEC61000-3-2, FCC, CISPR 22(EN 55022)

EMS：

EN 61000-4-2 ESD, EN61000-4-4 EFT, EN61000-4-5 SURGE

SAFETY：

TO MEET UL, CUL, TUV, CCC

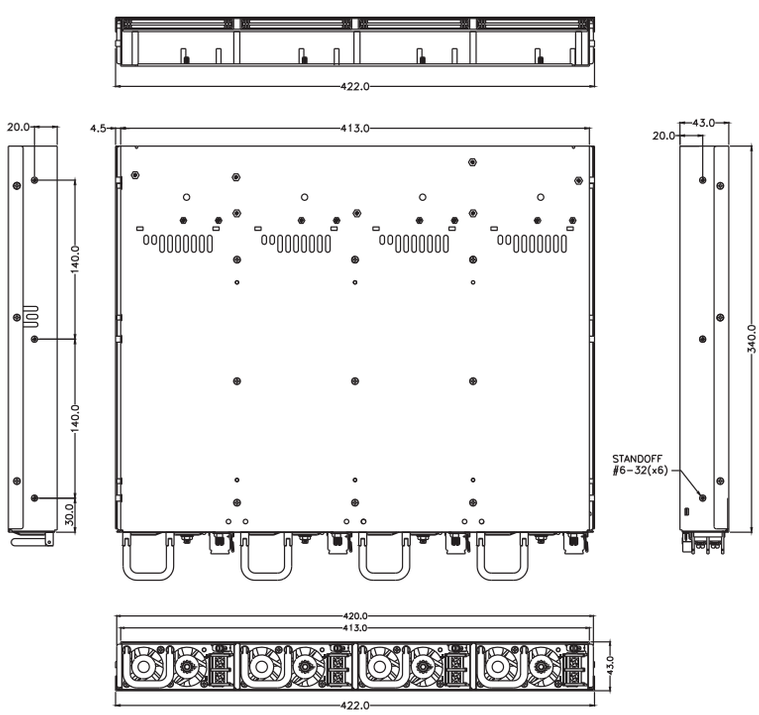

OUTPUT CHARACTERISTICS

MODEL	WATTAGE	OUTPUT					
		+5V	+12V	+3.3V	-5V	-12V	+5VSB
DG1W4-5BG0V0H	2700W	32A	225A	32A	X	1A	6A
REGULATION LOAD		±5%	±5%	±5%	X	±5%	±5%
RIPPLE AND NOISE		50mV	120mV	50mV	X	120mV	50mV

REMARK：
THE OUTPUT CURRENT OF +5V AND +3.3V NOT EXCEED 190W
TOTAL POWER:2700W (MAX)

DG1W4-5BG0V0H

SPECIFICATION：

TEMPERATURE RANGE：OPERATING：0℃ ~ 40℃ , STORAGE：-20℃ --- 80℃

HOLD UP TIME：16 ms MINIMUM AT FULL LOAD & NORMAL INPUT VOLTAGE

EFFICIENCY：>80% TYPICAL AT -48VDC FULL LOAD

POWER GOOD SIGNAL：ON DELAY 100 ms TO 500 ms, OFF DELAY 1 ms

OUTPUT PROTECTION：OPP / OVP / OCP / SCP

FAULTY ALARM METHODS：LED, BUZZER, TTL SIGNAL

HOT-SWAPPABLE/HOT PLUGGABLE REDUNDANCY FUNCTION

ISOLATION：BUILT-IN THE POWER MODULE

REMOTE SENSING DESIGN

LEAKAGE CURRENT：INPUT LEAKAGE CURRENT FROM LINE TO GROUND WILL BE LESS THAN 3.5MA RMS. MEASUREMENT WILL BE MADE AT 240 VAC AND 60HZ.

DIMENSION：340mm (D) x 422mm (W) x 43mm (H)

THE POWER-SUPPLY IS FOR CHASSIS-ASSEMBLY ONLY AND IS NOT ALLOWED TO BE OPERATED AS STAND-ALONE COMPONENT. FINAL ASSEMBLY HAS TO COMPLY WITH CORRESPONDING EMC- AND SAFETY-REGULATIONS.

INPUT CHARACTERISTICS

VOLTAGE：

-36 ~ -72VDC

STEADY-STATE CURRENT：

-36 ~ -72VDC / 97~46A

INRUSH CURRENT：

80AMP AT -48VDC

EMI：

IEC61000-3-2, FCC, CISPR 22(EN 55022)

EMS：

EN 61000-4-2 ESD, EN6100-4-4 EFT, EN61000-4-5 SURGE

SAFETY：

TO MEET UL, CUL, TUV, CCC

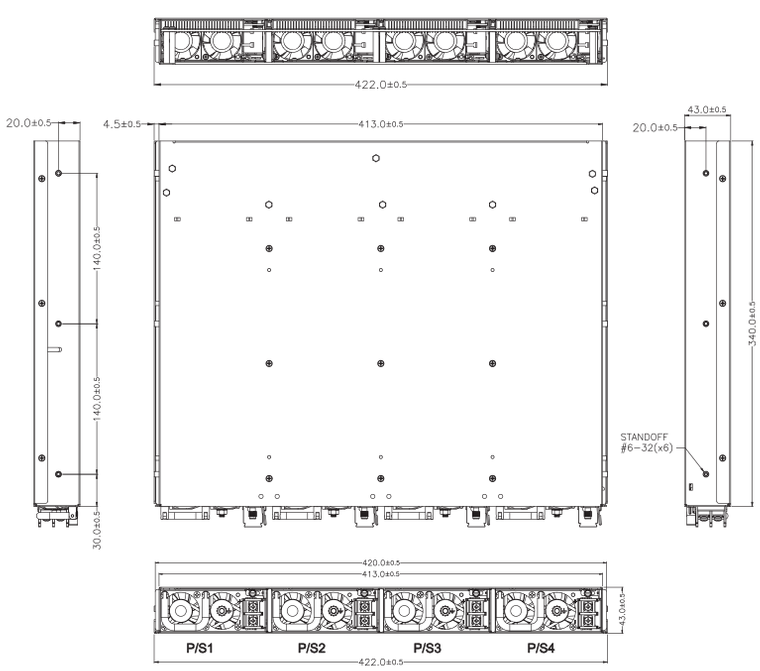

More product details

FORM FACTOR	MODEL NAME	WATTAGE	INPUT	D (mm/inch)	W (mm/inch)	H (mm/inch)	CCC	BSMI	+5V	+12V	+3.3V	-5V	-12V	+5VSB	+5.3VA.VB	+5V2	+12V2	+3.3V2
EASYSWAP	P1Z-6350P	350W	PFC	265/10.43	100.8/3.97	41.8/1.65	V		25	28	20	0.5	0.8	2	X	X	X	X
EASYSWAP	P1Z-6400P	400W	PFC	265/10.43	100.8/3.97	41.8/1.65	V		25	28	20	0.5	0.8	2	X	X	X	X
EASYSWAP	P1W-6520P	520W	PFC	300/11.81	100.8/3.97	41.8/1.65	V		30	32	24	0.7	0.7	3	X	X	X	X
1U	H1U-6150P	150W	PFC	155/6.1	100/3.94	40/1.57	V		16	9	10	0.2	0.5	2	X	X	X	X
1U	H1U-6200P	200W	PFC	155/6.1	100/3.94	40/1.57	V		20	12	14	0.2	0.5	2	X	X	X	X
1U	H1U-6250P	250W	PFC	155/6.1	100/3.94	40/1.57	V		23	16	14	0.5	0.5	2	X	X	X	X
1U	P1A-6200P	200W	PFC	190/7.48	100/3.94	40.5/1.59	V		25	8	14	0.5	0.5	1.5	X	X	X	X
1U	P1A-6250P	250W	PFC	190/7.48	100/3.94	40.5/1.59	V		24	12	20	0.5	0.5	1.5	X	X	X	X
1U	P1A-6300P	300W	PFC	205/8.07	100/3.94	40.5/1.59	V		24	20	20	0.5	1	1.5	X	X	X	X
1U	P1A-6201P	200W	PFC	190/7.48	100/3.94	40.5/1.59	V		24	12	20	0.5	0.5	1.5	X	X	X	X
1U	P1A-6221P	220W	PFC	190/7.48	100/3.94	40.5/1.59	V		24	12	20	0.5	0.5	1.5	X	X	X	X
1U	P1A-6301P	300W	PFC	190/7.48	100/3.94	40.5/1.59	V		24	20	20	0.5	0.5	1.5	X	X	X	X
1U	P1X-6200P	200W	PFC	190/7.48	100/3.94	40.5/1.59	V		23	12	14	0.2	0.5	2	X	X	X	X
1U	P1X-6250P	250W	PFC	190/7.48	100/3.94	40.5/1.59	V		23	16	14	0.2	0.5	2	X	X	X	X
1U	P1X-6300P	300W	PFC	190/7.48	100/3.94	40.5/1.59	V		23	20	14	0.2	0.5	2	X	X	X	X
1U	P1U-6150P	150W	PFC	190/7.48	100/3.94	40/1.57	V		14	7	10	0.1	0.7	1.5	X	X	X	X
1U	P1U-6180P	180W	PFC	190/7.48	100/3.94	40/1.57	V		16	7	14	0.1	0.7	1.5	X	X	X	X
1U	P1U-6200P	200W	PFC	190/7.48	100/3.94	40/1.57	V		16	7	14	0.2	0.7	1.5	X	X	X	X
1U	P1G-6250P	250W	PFC	205/8.07	100/3.94	40.5/1.59	V		25	12	14	0.5	1	1.5	X	X	X	X
1U	P1G-6300P	300W	PFC	205/8.07	100/3.94	40.5/1.59	V		25	16	14	0.5	1	1.5	X	X	X	X
1U	P1G-6305P	300W	PFC	205/8.07	100/3.94	40.5/1.59	V		30	16	14	0.5	1	1.5	X	X	X	X
1U	P1H-6350P	350W	PFC	225/8.86	100/3.94	40.5/1.59	V		25	22	20	0.5	0.5	2	X	X	X	X
1U	P1H-6400P	400W	PFC	225/8.86	100/3.94	40.5/1.59	V		25	28	20	0.5	0.5	2	X	X	X	X
1U	H1M-6550P	550W	PFC	225/8.86	100/3.94	40.5/1.59	V		30	48	24	0.5	0.5	4	X	X	X	X
1U	H1M-6600P	600W	PFC	225/8.86	100/3.94	40.5/1.59	V		30	48	24	0.5	0.5	4	X	X	X	X
1U	H1M-6557P	550W	PFC	275/10.83	100/3.94	40.5/1.59	V		30	48	24	0.5	0.5	4	X	X	X	X
1U	H1M-6607P	600W	PFC	275/10.83	100/3.94	40.5/1.59	V		30	48	24	0.5	0.5	4	X	X	X	X
2U	P2U-6300P	300W	PFC	200/7.87	100/3.94	70/2.76	V		35	16	20	0.5	1	2	X	X	X	X
2U	P2U-6320P	320W	PFC	200/7.87	100/3.94	70/2.76	V		35	16	20	0.5	1	2	X	X	X	X
2U	P2H-6350P	350W	PFC	240/9.45	100/3.94	70/2.76	V	V	25	28	20	0.5	0.5	2	X	X	X	X
2U	P2H-6400P	400W	PFC	240/9.45	100/3.94	70/2.76	V		25	28	20	0.5	0.5	2	X	X	X	X
2U	P2G-6400P	400W	PFC	240/9.45	100/3.94	70/2.76	V		33	25	28	0.8	1	2	X	X	X	X
2U	P2G-6435P	435W	PFC	240/9.45	100/3.94	70/2.76	V		33	25	28	0.8	1	2	X	X	X	X
2U	P2G-6460P	460W	PFC	240/9.45	100/3.94	70/2.76	V		33	27	28	0.8	1	2	X	X	X	X

FORM FACTOR	MODEL NAME	WATTAGE	INPUT	D (mm/inch)	W (mm/inch)	H (mm/inch)	CCC	BSMI	+5V	+12V	+3.3V	-5V	-12V	+5VSB	+5.3VA.VB	+5V2	+12V2	+3.3V2
2U	P2G-6510P	510W	PFC	240/9.45	100/3.94	70/2.76	V		33	32	28	0.8	1	2	X	X	X	X
2U	P2G-6510PE	510W	PFC	240/9.45	100/3.94	70/2.76	V		33	36	28	0.8	1	2	X	X	X	X
2U	P2M-6550P	550W	PFC	270/10.63	100/3.94	70/2.76	V		35	42	30	0.8	1	2	X	X	X	X
2U	P2M-6600P	600W	PFC	270/10.63	100/3.94	70/2.76	V		35	42	30	0.8	1	2	X	X	X	X
2U	P2P-5650P	650W	PFC	280/11.02	100/3.94	82.5/3.25	V		30	50	25	X	0.8	3	X	X	X	X
2U	P2P-5700P	700W	PFC	280/11.02	100/3.94	82.5/3.25	V		30	50	25	X	0.8	3	X	X	X	X
3U	H3M-6500P	500W	PFC	265/10.43	100/3.94	120/4.72	V		30	40	24	0.5	0.5	4	X	X	X	X
3U	H3M-6600P	600W	PFC	265/10.43	100/3.94	120/4.72	V		30	48	24	0.5	0.5	4	X	X	X	X
PS2	HG2-6300P	300W	PFC	140/5.51	150/5.91	86/3.39	V		35	22	25	0.8	1	2	X	X	X	X
PS2	HG2-6350P	350W	PFC	140/5.51	150/5.91	86/3.39	V		35	26	25	0.8	1	2	X	X	X	X
PS2	HG2-6400P	400W	PFC	140/5.51	150/5.91	86/3.39	V		35	30	25	0.8	1	2	X	X	X	X
PS2	HP2-6400P	400W	PFC	140/5.51	150/5.91	86/3.39	V		35	20	28	0.8	1	2	X	X	X	X
PS2	HP2-6460P	460W	PFC	140/5.51	150/5.91	86/3.39	V		40	27	30	0.8	1	2	X	X	X	X
PS2	HP2-6500P	500W	PFC	140/5.51	150/5.91	86/3.39	V		40	32	30	0.8	1	2	X	X	X	X
PS2+	PSM-6550P	550W	PFC	160/6.3	150/5.91	86/3.39	V		30	26	30	0.8	0.8	2	X	X	20	X
PS2+	PSM-6600P	600W	PFC	160/6.3	150/5.91	86/3.39	V		30	26	30	0.8	0.8	2	X	X	20	X
PS2+	PSA-6600P	600W	PFC	220/8.66	150/5.91	86/3.39	V		50	36	45	0.8	1	2	X	X	X	X
PS2+	PSA-6650P	650W	PFC	220/8.66	150/5.91	86/3.39	V		50	36	45	0.8	1	2	X	X	X	X
PS2+	PSA-6700P	700W	PFC	220/8.66	150/5.91	86/3.39	V		50	36	45	0.8	1	2	X	X	X	X
PS2+	PSL-6600P	600W	PFC	220/8.66	150/5.91	86/3.39	V		50	36	45	0.8	10	2	X	X	X	X
PS2+	PSL-6700P	700W	PFC	220/8.66	150/5.91	86/3.39	V		50	36	45	0.8	10	2	X	X	X	X
PS2+	PSL-6701P	700W	PFC	220/8.66	150/5.91	86/3.39	V		35	45	30	0.8	1	2	X	X	X	X
1U Redundant	R1M-6251P	250W	PFC	260/10.24	180/7.09	40.6/1.6	V		25	16	15	0.5	0.5	2	X	X	X	X
1U Redundant	R1Z-6350P	350W	PFC	265/10.43	206/8.11	41.5/1.63	V		25	28	20	0.5	0.8	2	X	X	X	X
1U Redundant	R1Z-6400P	400W	PFC	265/10.43	206/8.11	41.5/1.63	V		25	28	20	0.5	0.8	2	X	X	X	X
2U Redundant	MIN2-6251P	250W	PFC	230/9.06	82/3.23	85/3.35	V		25	16	15	0.5	0.5	2	X	X	X	X
2U Redundant	M1L2-5650P3V	650W	PFC	330/12.99	101.2/3.98	84/3.31	V	V	32	45	25	X	0-1	0.1-3	X	X	X	X
2U Redundant	M1L2-5700P3V	700W	PFC	330/12.99	101.2/3.98	84/3.31	V		32	45	25	X	0-1	0.1-3	X	X	X	X
2U Redundant	R2Z-6350P	350W	PFC	265/10.43	101.2/3.98	84/3.31	V		25	28	20	0.5	0.8	2	X	X	X	X
2U Redundant	R2Z-6400P	400W	PFC	265/10.43	101.2/3.98	84/3.31	V		25	28	20	0.5	0.8	2	X	X	X	X
2U Redundant	R2G-5420P4V	420W	PFC	276/10.87	101/3.98	82/3.23	V		24	26	20	X	0.8	3	X	X	X	X
2U Redundant	R2G-6300P	300W	PFC	300/11.81	101/3.98	82/3.23	V		32	16	20	0.5	0.8	1.5	X	X	X	X
2U Redundant	R2G-6350P	350W	PFC	300/11.81	101/3.98	82/3.23	V		35	22	20	0.5	0.8	2	X	X	X	X
2U Redundant	R2W-5600P3V	600W	PFC	300/11.81	101/3.98	84/3.31	V		32	42	24	X	1	2	X	X	X	X

FORM FACTOR	MODEL NAME	WATTAGE	INPUT	D (mm/inch)	W (mm/inch)	H (mm/inch)	CCC	BSMI	+5V	+12V	+3.3V	-5V	-12V	+5VSB	+5.3VA.VB	+5V2	+12V2	+3.3V2
2U Redundant	R2W-6400P	400W	PFC	300/11.81	101/3.98	84/3.31	V		26	28	24	0.7	0.7	2	X	X	X	X
2U Redundant	R2W-6460P	460W	PFC	300/11.81	101/3.98	84/3.31	V		30	32	24	0.7	0.7	2	X	X	X	X
2U Redundant	R2W-6500P	500W	PFC	300/11.81	101/3.98	84/3.31	V		30	32	24	0.7	0.7	2	X	X	X	X
2U Redundant	M2W-6460P	460W	PFC	300/11.81	101/3.98	84/3.31	V	V	30	32	24	0.7	0.7	2	X	X	X	X
2U Redundant	M2W-6500P	500W	PFC	300/11.81	101/3.98	84/3.31	V	V	30	32	24	0.7	0.7	2	X	X	X	X
2U Redundant	M2W-6550P	550W	PFC	300/11.81	101/3.98	84/3.31	V		30	36	24	0.7	0.7	2	X	X	X	X
2U Redundant	R2A-5350P	350W	PFC	220/8.66	120/4.72	85/3.35	V		35	8	35	X	0.8	2	X	X	X	X
2U Redundant	R2A-6300P	300W	PFC	220/8.66	120/4.72	85/3.35	V		32	16	20	0.5	0.8	2	X	X	X	X
2U Redundant	R2A-6320P	320W	PFC	220/8.66	120/4.72	85/3.35	V		32	16	20	0.5	0.8	2	X	X	X	X
Mini Redundant	MRT-6300P	300W	PFC	185/7.28	150/5.91	86/3.39	V		25	16	18	0.5	0.5	2	X	X	X	X
Mini Redundant	MRT-6320P	320W	PFC	185/7.28	150/5.91	86/3.39	V		25	16	18	0.5	0.5	2	X	X	X	X
Mini Redundant	MRW-6350P	350W	PFC	185/7.28	150/5.91	86/3.39	V		35	22	25	0.5	1.2	2	X	X	X	X
Mini Redundant	MRW-6400P	400W	PFC	185/7.28	150/5.91	86/3.39	V		35	28	25	0.5	1.2	2	X	X	X	X
Mini Redundant	MRW-6420P	420W	PFC	185/7.28	150/5.91	86/3.39	V		35	28	25	0.5	1.2	2	X	X	X	X
Mini Redundant	MRG-6460P	460W	PFC	200/7.87	150/5.91	86/3.39	V		35	32	25	0.8	1	2.5	X	X	X	X
Mini Redundant	MRG-6500P	500W	PFC	200/7.87	150/5.91	86/3.39	V		35	32	25	0.8	1	2.5	X	X	X	X
Mini Redundant	MX3-6550P	550W	PFC	254/10	150/5.91	82/3.23	V		60	40	36	1	1	2.5	X	X	X	X
Mini Redundant	MX3-6600P	600W	PFC	254/10	150/5.91	82/3.23	V		60	40	36	1	1	2.5	X	X	X	X
Mini Redundant	MX3-5700P	700W	PFC	265/10.43	150/5.91	84/3.31	V		50	52	38	X	1	3.5	X	X	X	X
Mini Redundant	MX3-5750P	750W	PFC	265/10.43	150/5.91	84/3.31	V		52	56	40	X	1	3.5	X	X	X	X
Mini Redundant	MRM-6550P	550W	PFC	254/10	150/5.91	84/3.31	V		28	41	28	0.8	1	3.5	X	X	X	X
Mini Redundant	MRM-6600P	600W	PFC	254/10	150/5.91	84/3.31	V		30	45	28	0.8	1	3.5	X	X	X	X
Mini Redundant	MRM-6650P	650W	PFC	254/10	150/5.91	84/3.31	V		30	48	28	0.8	1	3.5	X	X	X	X
PS2*2 Redundant	RHD-6400P	400W	PFC	183/7.2	153.4/6.04	213.2/8.39	V		35	20	28	0.8	1	2	X	X	X	X
PS2*2 Redundant	RHD-6460P	460W	PFC	183/7.2	153.4/6.04	213.2/8.39	V		40	32	30	0.8	1	2	X	X	X	X
PS2*2 Redundant	RHI-6400P	400W	PFC	183/7.2	167/6.57	187.8/7.39	V		35	20	28	0.8	1	2	X	X	X	X
PS2*2 Redundant	RHI-6460P	460W	PFC	183/7.2	167/6.57	187.8/7.39	V		40	32	30	0.8	1	2	X	X	X	X
PS2*2 Redundant	RHH-6400P	400W	PFC	194.2/7.65	354/13.94	106/4.17	V		35	20	28	0.8	1	2	X	X	X	X
PS2*2 Redundant	RHH-6460P	460W	PFC	194.2/7.65	354/13.94	106/4.17	V		40	32	30	0.8	1	2	X	X	X	X
N + 1 Redundant	M3W-6950P	950W	PFC	300/11.81	101/3.98	125/4.92	V		56	60	44	1.2	1.2	3.5	X	X	X	X
N + 1 Redundant	R3U-6460P	460W	PFC	254/10	127/5	82/3.23	V		50	32	28	1	1	1	X	X	X	X
N + 1 Redundant	R3G-5800P4V	800W	PFC	276/10.87	127/5	83/3.27	V		45	49	38	0	1	4	X	X	X	X
N + 1 Redundant	R3G-6650P	650W	PFC	300/11.81	127/5	82/3.23	V		60	40	40	1	1	2.5	X	X	X	X
N + 1 Redundant	MR3-6460P	460W	PFC	254/10	150/5.91	82/3.23	V		50	32	28	1	1	3	X	X	X	X

FORM FACTOR	MODEL NAME	WATTAGE	INPUT	D (mm/inch)	W (mm/inch)	H (mm/inch)	CCC	BSMI	+5V	+12V	+3.3V	-5V	-12V	+5VSB	+5.3VA.VB	+5V2	+12V2	+3.3V2
N + 1 Redundant	MR3-6480P	480W	PFC	254/10	150/5.91	82/3.23	V		50	32	28	1	1	3	X	X	X	X
N + 1 Redundant	M1G3-6930P	930W	PFC	335/13.19	369/14.53	42/1.65	V		44	30	50	44	1.2	50	X	3.5	X	X
N + 1 Redundant	M1W4-6D50P	1350W	PFC	340/13.39	422/16.61	43/1.69	V		84.5	90	67.5	1.2	1.2	3.5	X	X	X	X
DC 1U	B1U-6150F	150W	DC 24V	190/7.48	100/3.94	40.5/1.59	V		18	6	10	0.5	18	6	X	X	X	X
DC 1U	BP1H-6300F	300W	DC 24V	225/8.86	100/3.94	40.5/1.59	V		35	22	20	0.5	0.5	2	X	X	X	X
DC 1U	DP1A-6250F	250W	DC -48V	205/8.07	100/3.94	40.5/1.59	V		24	16	20	0.5	0.5	2.5	X	X	X	X
DC 1U	DP1A-6300F	300W	DC -48V	205/8.07	100/3.94	40.5/1.59	V		24	20	20	0.5	0.5	2.5	X	X	X	X
DC 1U	DP1H-6350F	350W	DC -48V	225/8.86	100/3.94	40.5/1.59	V		35	22	20	0.5	0.5	2	X	X	X	X
DC 1U	DP1H-6400F	400W	DC -48V	225/8.86	100/3.94	40.5/1.59	V		35	28	20	0.5	0.5	2	X	X	X	X
DC 2U	DP2H-6350F	350W	DC -48V	215/8.46	100/3.94	70/2.76	V		35	22	20	0.5	0.5	2	X	X	X	X
DC 2U	DP2H-6400F	400W	DC -48V	215/8.46	100/3.94	70/2.76	V		35	22	20	0.5	0.5	2	X	X	X	X
DC PS2+	DPSM-6500F	500W	DC -48V	160/6.3	150/5.91	86/3.39			30	40	30	0.8	0.8	2	X	X	X	X
DC PS2+	DPSM-6550F	550W	DC -48V	160/6.3	150/5.91	86/3.39		V	30	45	30	0.8	0.8	2	X	X	X	X
DC 1U Redundant	DR1M-6221F	220W	DC -48V	260/10.24	180/7.09	40.5/1.59	V		25	16	15	0.5	0.5	2	X	X	X	X
DC 1U Redundant	DR1Z-6400F	400W	DC -48V	265/10.43	206/8.11	41.5/1.63	V		25	28	20	0.5	0.8	2	X	X	X	X
DC Mini Redundant	DMRW-6300F	300W	DC -48V	185/7.28	150/5.91	86/3.39	V		30	20	20	0.5	1.2	2	X	X	X	X
DC Mini Redundant	DMRW-6350F	350W	DC -48V	185/7.28	150/5.91	86/3.39	V		32	25	25	0.5	1.2	2	X	X	X	X
DC Mini Redundant	DMRW-6375F	375W	DC -48V	185/7.28	150/5.91	86/3.39	V		32	25	25	0.5	1.2	2	X	X	X	X
DC Mini Redundant	DMRW-6400F	400W	DC -48V	185/7.28	150/5.91	86/3.39	V		32	25	25	0.5	1.2	2	X	X	X	X
DC 2U Redundant	DMIN2-6221F	220W	DC -48V	230/9.06	82/3.23	85/3.35	V		25	16	15	0.5	0.5	2	X	X	X	X
DC 2U Redundant	DR2Z-6400F	400W	DC -48V	265/10.43	101/3.98	84/3.31	V		25	28	20	0.5	0.8	2	X	X	X	X
DC 2U Redundant	DM2W-6460F	460W	DC -48V	300/11.81	101/3.98	84/3.31	V		27	32	24	0.7	0.7	2	X	X	X	X
DC 2U Redundant	DM2W-6500F	500W	DC -48V	300/11.81	101/3.98	84/3.31	V		27	32	24	0.7	0.7	2	X	X	X	X
DC 2U Redundant	DR2G-6350F	350W	DC -48V	300/11.81	101/3.98	82/3.23	V		35	22	20	0.5	0.8	2	X	X	X	X
DC N + 1 Redundant	DM3W-6950F	950W	DC -48V	300/11.81	101/3.98	125/4.92	V		50	60	44	1.2	1.2	3.5	X	X	X	X
DC N + 1 Redundant	DM4W-6D50F	1350W	DC -48V	300/11.81	101/3.98	166/6.54	V		75	90	67.5	1.2	1.2	3.5	X	X	X	X
DC N + 1 Redundant	DR3G-6650F	650W	DC -48V	300/11.81	127/5	82/3.23	V		60	40	40	1	1	2.5	X	X	X	X
DC N + 1 Redundant	DGIH3-6650F	650W	DC -48V	330/12.99	290/11.42	42/1.65	V		60	40	40	1	1	2.5	X	X	X	X
DC N + 1 Redundant	DGIH4-6950F	950W	DC -48V	330/12.99	383/15.08	42/1.65	V		90	60	54	1.2	2	5	X	X	X	X
DC N + 1 Redundant	DM1W3-6950F	950W	DC -48V	330/12.99	383/15.08	42/1.65	V		50	60	44	1.2	1.2	3.5	X	X	X	X
DC N + 1 Redundant	DM1W4-6D50F	1350W	DC -48V	340/13.39	422/16.61	43/1.69	V		75	90	67.5	1.2	1.2	3.5	X	X	X	X

Module details

NEW	FORM FACTOR	MODEL NAME	WATTAGE	INPUT	D (mm/inch)	W (mm/inch)	H (mm/inch)	+5V	+12V	+3.3V	-5V	-12V	+5VSB	+5V2
	AC N + 1	R1T-1120V	120W	PFC	167 / 6.57	50.5 / 1.99	40 / 1.57	X	10	X	X	X	X	X
New	AC N + 1	R1T-1127V	120W	PFC	167 / 6.57	50.5 / 1.99	40 / 1.57	X	10	X	X	X	X	X
	AC N + 1	R1S-1120V	120W	PFC	100 / 3.94	81.5 / 3.21	40.3 / 1.59	X	10	X	X	X	X	X
	AC N + 1	R1U-2220V	220W	PFC	223 / 8.78	50.5 / 1.99	40 / 1.57	X	17.5	X	X	X	X	X
	AC N + 1	R1U-2200V	200W	PFC	223 / 8.78	50.5 / 1.99	40 / 1.57	X	16	X	X	X	X	X
New	AC N + 1	M1Y-2302G	300W	PFC	236 / 9.29	50.5 / 1.99	40 / 1.57	X	24	X	X	X	3	X
New	AC N + 1	M1Y-2302K	300W	PFC	236 / 9.29	50.5 / 1.99	40 / 1.57	X	25	X	X	X	3	X
New	AC N + 1	M1Y-2152V	150W	PFC	236 / 9.29	50.5 / 1.99	40 / 1.57	X	12	X	X	X	2	X
	AC 1 + 1	R1V-2275V	275W	PFC	236 / 9.29	50.5 / 1.99	40 / 1.57	X	22	X	X	X	2.5	X
	AC N + 1	M1S-3400V	400W	PFC	300 / 11.81	50.5 / 1.99	40 / 1.57	X	33	X	X	0.8	3.5	X
	AC N + 1	M1S-3401V	400W	PFC	300 / 11.81	50.5 / 1.99	40 / 1.57	X	33	X	X	0.8	3.5	X
	AC N + 1	M1S-3500V	500W	PFC	300 / 11.81	50.5 / 1.99	40 / 1.57	X	41	X	X	0.8	3.5	X
	AC N + 1	M1S-3501V	500W	PFC	300 / 11.81	50.5 / 1.99	40 / 1.57	X	41	X	X	0.8	3.5	X
	AC N + 1	M1S-3551V	550W	PFC	300 / 11.81	50.5 / 1.99	40 / 1.57	X	45	X	X	0.8	3.5	X
	AC N + 1	M1S-3600G	600W	PFC	300 / 11.81	50.5 / 1.99	40 / 1.57	X	45	X	X	0.8	3.5	X
New	AC N + 1	M1S-3602G	600W	PFC	300 / 11.81	50.5 / 1.99	40 / 1.57	X	45	X	X	0.8	3.5	X
	AC N + 1	M1U-2650V	650W	PFC	300 / 11.81	50.5 / 1.99	40 / 1.57	X	54	X	X	X	3	X
	AC N + 1	M1U-2750V	750W	PFC	300 / 11.81	50.5 / 1.99	40 / 1.57	X	62	X	X	X	3	X
	AC N + 1	M1U-2800V	800W	PFC	300 / 11.81	50.5 / 1.99	40 / 1.57	X	66	X	X	X	3	X
	AC N + 1	M1V-2800V	800W	PFC	300 / 11.81	50.5 / 1.99	40 / 1.57	X	66	X	X	X	3	X
	AC N + 1	M1K-2A00V	1000W	PFC	350 / 13.78	50.5 / 1.99	40 / 1.57	X	83	X	X	X	3	X
New	AC N + 1	M1K-2A10V	1010W	PFC	330 / 12.99	50.5 / 1.99	40 / 1.57	X	84	X	X	X	3	X
	AC N + 1	M1K-2C00V	1200W	PFC	350 / 13.78	50.5 / 1.99	40 / 1.57	X	100	X	X	X	4	X
New	AC N + 1	M1H-2AD0V	1400W	PFC	373 / 14.69	50.5 / 1.99	40 / 1.57	X	116	X	X	X	3	X
New	AC N + 1	M1H-2A00V	1000W	DC -48V	350 / 13.78	50.5 / 1.99	40 / 1.57	X	83	X	X	X	3	X
New	AC N + 1	M1H-2C00V	1200W	PFC	350 / 13.78	50.5 / 1.99	40 / 1.57	X	100	X	X	X	3	X
	AC 1 + 1	SPH-2A00V	1000W	PFC	335 / 13.19	61 / 2.4	45 / 1.77	X	83	X	X	X	4	X
	AC 1 + 1	SPH-2C00V	1200W	PFC	335 / 13.19	61 / 2.4	45 / 1.77	X	100	X	X	X	4	X
	AC N + 1	PSS-2A00V	1000W	PFC	310 / 12.2	61 / 2.4	40.5 / 1.59	X	83	X	X	X	4	X
	AC N + 1	PSS-2C00V	1200W	PFC	310 / 12.2	61 / 2.4	40.5 / 1.59	X	100	X	X	X	4	X
	AC N + 1	PSS-2E00V	1400W	PFC	310 / 12.2	61 / 2.4	40.5 / 1.59	X	125	X	X	X	4	X
New	AC 1 + 1	MRH-2930V	930W	PFC	220 / 8.66	72.5 / 2.85	82 / 3.23	X	77.5	X	X	X	3	X
	AC 1 + 1	MRH-2AD0V	1400W	PFC	220 / 8.66	72.5 / 2.85	82 / 3.23	X	116	X	X	X	3	X
	AC N + 1	MIN-6251P	250W	PFC	200 / 7.87	79 / 3.11	40 / 1.57	25	16	15	0.5	0.5	2	X
	AC N + 1	G1M-5300P	300W	PFC	215 / 8.46	79 / 3.11	40 / 1.57	20	22	20	X	0.8	3	X
	AC N + 1	GTM-5400V	400W	PFC	215 / 8.46	79 / 3.11	40 / 1.57	30	25	20	X	0.8	3	X
	AC N + 1	GHM-5400V	400W	PFC	215 / 8.46	79 / 3.11	40 / 1.57	30	25	X	X	0.8	3	30
	AC N + 1	MX1-6300P	300W	PFC	224 / 8.82	79 / 3.11	48.6 / 1.91	30	20	18	0.5	0.8	2	X
	AC N + 1	MX1-6325P	325W	PFC	224 / 8.82	79 / 3.11	48.6 / 1.91	30	20	18	0.5	0.8	2	X
	AC N + 1	GIN-5420P	420W	PFC	250 / 9.84	79 / 3.11	40.5 / 1.59	24	26	20	X	0.8	3	X
	AC N + 1	GIN-6350P	350W	PFC	242 / 9.53	79 / 3.11	40.5 / 1.59	35	22	20	0.5	0.8	2	X
	AC N + 1	GIN-3420V	420W	PFC	250 / 9.84	79 / 3.11	40.5 / 1.59	X	33	X	X	0.8	3.5	X

NEW	FORM FACTOR	MODEL NAME	WATTAGE	INPUT	D (mm/inch)	W (mm/inch)	H (mm/inch)	+5V	+12V	+3.3V	-5V	-12V	+5VSB	+5V2
	AC N + 1	GIN-3500V	500W	PFC	250 / 9.84	79 / 3.11	40.5 / 1.59	X	40	X	X	0.8	3.5	X
	AC N + 1	GIN-3600V	600W	PFC	250 / 9.84	79 / 3.11	40.5 / 1.59	X	48	X	X	0.8	3.5	X
	AC N + 1	GIN-3800V	800W	PFC	305 / 12.01	79 / 3.11	40 / 1.57	X	65	X	X	0.8	3.5	X
	AC N + 1	GIN-3602G	600W	PFC	250 / 9.84	79 / 3.11	40.5 / 1.59	X	48	X	X	0.8	3.5	X
	AC N + 1	GIN-2650G2	650W	PFC	250 / 9.84	79 / 3.11	40.5 / 1.59	X	54	X	X	X	3	X
	AC N + 1	ATN-5400V	400W	PFC	265 / 10.43	79 / 3.11	40.5 / 1.59	32	33	25	X	0.5	3.5	X
	AC N + 1	ATN-5500V	500W	PFC	265 / 10.43	79 / 3.11	40.5 / 1.59	32	41	25	X	0.5	3.5	X
	AC N + 1	ATN-5600V	600W	PFC	265 / 10.43	79 / 3.11	40.5 / 1.59	32	49	25	X	0.5	3.5	X
New	AC N + 1	KIN-2AD2V	1400W	PFC	305 / 12.01	79 / 3.11	40 / 1.57	X	116	X	X	X	3	X
	AC N + 1	KIN-2800V	800W	PFC	305 / 12.01	79 / 3.11	40 / 1.57	X	65	X	X	X	3.5	X
	AC N + 1	KIN-2A00V	1000W	PFC	305 / 12.01	79 / 3.11	40 / 1.57	X	83	X	X	X	3.5	X
	AC N + 1	KIN-2C00V	1200W	PFC	305 / 12.01	79 / 3.11	40 / 1.57	X	100	X	X	X	3.5	X
	AC N + 1	KIN-2802V	800W	PFC	305 / 12.01	79 / 3.11	40 / 1.57	X	65	X	X	X	3.5	X
	AC N + 1	KIN-2A02V	1000W	PFC	305 / 12.01	79 / 3.11	40 / 1.57	X	83	X	X	X	3.5	X
New	AC N + 1	KIN-2AB0K2	1200W	PFC	305 / 12.01	79 / 3.11	40 / 1.57	X	100	X	X	X	3.5	X
New	AC N + 1	KIN-2AB0G2	1200W	PFC	305 / 12.01	79 / 3.11	40 / 1.57	X	100	X	X	X	3.5	X
	AC N + 1	MX1-5350P	350W	PFC	224 / 8.82	81 / 3.19	48.6 / 1.91	25	26	19	X	0.8	2.5	X
	AC N + 1	MX1-5375P	375W	PFC	224 / 8.82	81 / 3.19	48.6 / 1.91	26	28	20	X	0.8	2.5	X
	AC 1 + 1	P1S-2300V-R	300W	PFC	170 / 6.69	81.5 / 3.21	40.3 / 1.59	X	24	X	X	X	2.5	X
	AC 1 + 1	P1S-2400V-R	400W	PFC	170 / 6.69	81.5 / 3.21	40.3 / 1.59	X	33	X	X	X	2.5	X
New	AC 1 + 1	P1S-2407V-R	400W	PFC	210 / 8.27	81.5 / 3.21	40.3 / 1.59	X	33	X	X	X	2.5	X
New	AC 1 + 1	P1S-2500V-R	500W	PFC	170 / 6.69	81.5 / 3.21	40.3 / 1.59	X	41	X	X	X	2.5	X
New	AC 1 + 1	P1S-2507V-R	500W	PFC	190 / 7.48	81.5 / 3.21	40.3 / 1.59	X	41	X	X	X	2.5	X
	AC 1 + 1	P1S-3180V-R	180W	PFC	170 / 6.69	81.5 / 3.21	40.3 / 1.59	X	14	X	X	0.3	2.5	X
New	AC N + 1	M1P-2300V	300W	PFC	180 / 7.09	81.5 / 3.21	40.3 / 1.59	X	25	X	X	X	3.5	X
	AC N + 1	M1P-2420V	420W	PFC	180 / 7.09	81.5 / 3.21	40.3 / 1.59	X	35	X	X	X	3.5	X
	AC N + 1	M1P-2500V	500W	PFC	180 / 7.09	81.5 / 3.21	40.3 / 1.59	X	41	X	X	X	3.5	X
New	AC N + 1	M1D-2500G	500W	PFC	138.5 / 5.45	98.4 / 3.87	40 / 1.57	X	41	X	X	X	3	X
New	AC N + 1	M1D-2300V	300W	PFC	138.5 / 5.45	98.4 / 3.87	40 / 1.57	X	25	X	X	X	3	X
New	AC N + 1	M1D-2400V	400W	PFC	138.5 / 5.45	98.4 / 3.87	40 / 1.57	X	33	X	X	X	3	X
New	AC N + 1	M1D-2500V	500W	PFC	138.5 / 5.45	98.4 / 3.87	40 / 1.57	X	41	X	X	X	3	X
New	AC N + 1	M1D-2600V	600W	PFC	169 / 6.65	98.4 / 3.87	40 / 1.57	X	50	X	X	X	3	X
New	AC N + 1	M1D-2700V	700W	PFC	169 / 6.65	98.4 / 3.87	40 / 1.57	X	58	X	X	X	3	X
New	AC N + 1	M1D-2800V	800W	PFC	169 / 6.65	98.4 / 3.87	40 / 1.57	X	66	X	X	X	3	X
	AC 1 + 1	R2Z-6350P-R	350W	PFC	230.3 / 9.07	98.4 / 3.87	40 / 1.57	25	28	20	0.5	0.8	2	X
	AC 1 + 1	R2Z-6400P-R	400W	PFC	230.3 / 9.07	98.4 / 3.87	40 / 1.57	25	28	20	0.5	0.8	2	X
	AC N + 1	M1Z-5400V	400W	PFC	230.3 / 9.07	98.4 / 3.87	40 / 1.57	24	32	24	X	0.8	3.5	X
	AC N + 1	M1Z-5460V	460W	PFC	230.3 / 9.07	98.4 / 3.87	40 / 1.57	24	36	24	X	0.8	3.5	X
	AC N + 1	M1Z-5500V	500W	PFC	230.3 / 9.07	98.4 / 3.87	40 / 1.57	24	40	24	X	0.8	3.5	X
	AC N + 1	M1Z-5550V	550W	PFC	230.3 / 9.07	98.4 / 3.87	40 / 1.57	24	45	24	X	0.8	3.5	X
	AC 1 + 1	R2W-5600P-R	600W	PFC	265.3 / 10.44	98.4 / 3.87	40 / 1.57	32	42	24	X	0.7	2	X
	AC 1 + 1	R2W-6460P-R	460W	PFC	265.3 / 10.44	98.4 / 3.87	40 / 1.57	30	32	24	0.7	0.7	2	X

NEW	FORM FACTOR	MODEL NAME	WATTAGE	INPUT	D (mm/inch)	W (mm/inch)	H (mm/inch)	+5V	+12V	+3.3V	-5V	-12V	+5VSB	+5V2
	AC 1 + 1	R2W-6500P-R	500W	PFC	265.3 / 10.44	98.4 / 3.87	40 / 1.57	30	32	24	0.7	0.7	2	X
	AC N + 1	MTW-5660V	660W	PFC	265.3 / 10.44	98.4 / 3.87	40 / 1.57	32	50	36	X	0.8	3.5	X
	AC N + 1	MTW-5760V	760W	PFC	265.3 / 10.44	98.4 / 3.87	40 / 1.57	32	62	36	X	0.8	3.5	X
	AC N + 1	MTW-5820V	820W	PFC	265.3 / 10.44	98.4 / 3.87	40 / 1.57	32	67	36	X	0.8	3.5	X
	AC N + 1	MTW-5900V	900W	PFC	265.3 / 10.44	98.4 / 3.87	40 / 1.57	32	72	36	X	0.8	3.5	X
	AC N + 1	MTW-5962V	960W	PFC	265.3 / 10.44	98.4 / 3.87	40 / 1.57	32	77	36	X	0.8	3.5	X
New	AC N + 1	MTW-5AD0V	1400W	PFC	265.3 / 10.44	98.4 / 3.87	40 / 1.57	50	100	12	X	0.8	3	X
New	AC N + 1	MTW-5AD0B2	1400W	PFC	265.3 / 10.44	98.4 / 3.87	40 / 1.57	50	100	12	X	0.5	3	X
New	AC N + 1	MHW-5960V	960W	PFC	265.3 / 10.44	98.4 / 3.87	40 / 1.57	32	77	36	X	0.8	3.5	X
	AC N + 1	MHW-5962V	960W	PFC	265.3 / 10.44	98.4 / 3.87	40 / 1.57	32	77	X	X	0.8	3.5	32
	AC N + 1	G1W-3660V	660W	PFC	265.3 / 10.44	98.4 / 3.87	40 / 1.57	X	55	X	X	0.8	3.5	X
	AC N + 1	G1W-3760V	760W	PFC	265.3 / 10.44	98.4 / 3.87	40 / 1.57	X	62	X	X	0.8	3.5	X
New	AC N + 1	G1W-3762V	760W	PFC	265.3 / 10.44	98.4 / 3.87	40 / 1.57	X	62	X	X	0.8	3.5	X
	AC N + 1	G1W-3860V	860W	PFC	265.3 / 10.44	98.4 / 3.87	40 / 1.57	X	70	X	X	0.8	3.5	X
	AC N + 1	G1W-3862V	860W	PFC	265.3 / 10.44	98.4 / 3.87	40 / 1.57	X	70	X	X	0.8	3.5	X
	AC N + 1	G1W-3960V	960W	PFC	265.3 / 10.44	98.4 / 3.87	40 / 1.57	X	78	X	X	0.8	3.5	X
New	AC N + 1	G1W-3962V	960W	PFC	265.3 / 10.44	98.4 / 3.87	40 / 1.57	X	78	X	X	0.8	3.5	X
	AC N + 1	G1W-3A10V	1010W	PFC	265.3 / 10.44	98.4 / 3.87	40 / 1.57	X	83	X	X	0.8	3.5	X
New	AC N + 1	G1W-3A12V	1010W	PFC	265.3 / 10.44	98.4 / 3.87	40 / 1.57	X	83	X	X	0.8	3.5	X
	AC N + 1	G1W-3C00V	1200W	PFC	265.3 / 10.44	98.4 / 3.87	40 / 1.57	X	98	X	X	0.8	3.5	X
New	AC N + 1	G1W-3C02V	1200W	PFC	265.3 / 10.44	98.4 / 3.87	40 / 1.57	X	98	X	X	0.8	3.5	X
	AC N + 1	G1W-3AE2G	1500W	PFC	265.3 / 10.44	98.4 / 3.87	40 / 1.57	X	125	X	X	0.8	3.5	X
New	AC N + 1	T1W-3A12V	1010W	PFC	265.3 / 10.44	98.4 / 3.87	40 / 1.57	X	83	X	X	0.8	3.5	X
	AC N + 1	M1W-6460P	460W	PFC	265.3 / 10.44	98.4 / 3.87	40 / 1.57	30	32	24	0.7	0.7	20	X
	AC N + 1	M1W-6500P	500W	PFC	265.3 / 10.44	98.4 / 3.87	40 / 1.57	30	32	24	0.7	0.7	20	X
	AC N + 1	M1W-6550P	550W	PFC	265.3 / 10.44	98.4 / 3.87	40 / 1.57	30	36	24	0.7	0.7	20	X
	AC N + 1	M1W-3500V	500W	PFC	265.3 / 10.44	98.4 / 3.87	40.5 / 1.59	X	40	X	X	0.8	3.5	X
	AC N + 1	M1W-3600V	600W	PFC	265.3 / 10.44	98.4 / 3.87	40.5 / 1.59	X	48	X	X	0.8	3.5	X
New	AC N + 1	G2W-3662V-R	660W	PFC	265.3 / 10.44	98.4 / 3.87	40 / 1.57	X	55	X	X	0.8	3.5	X
	AC N + 1	M1W-2600G	600W	PFC	265.3 / 10.44	98.4 / 3.87	40 / 1.57	X	50	X	X	X	3	X
New	AC N + 1	M1W-2650G	650W	PFC	265.3 / 10.44	98.4 / 3.87	40 / 1.57	X	54	X	X	X	3	X
New	AC N + 1	M1W-2700G	700W	PFC	265.3 / 10.44	98.4 / 3.87	40 / 1.57	X	58	X	X	X	3	X
	AC N + 1	M1W-2700K	700W	PFC	265.3 / 10.44	98.4 / 3.87	40 / 1.57	X	58	X	X	X	3	X
	AC N + 1	M1W-2810V	810W	PFC	265.3 / 10.44	98.4 / 3.87	40 / 1.57	X	66	X	X	X	4	X
	AC N + 1	M1W-2910V	910W	PFC	265.3 / 10.44	98.4 / 3.87	40 / 1.57	X	75	X	X	X	4	X
	AC N + 1	M1W-2A10V	1010W	PFC	265.3 / 10.44	98.4 / 3.87	40 / 1.57	X	83	X	X	X	4	X
	AC N + 1	M1W-2C00V	1200W	PFC	265.3 / 10.44	98.4 / 3.87	40 / 1.57	X	100	X	X	X	4	X
	AC N + 1	M1W-2E00V	1400W	PFC	265.3 / 10.44	98.4 / 3.87	40 / 1.57	X	116	X	X	X	4	X
New	AC N + 1	M1W-2AG0V	1700W	PFC	285.3 / 11.23	98.4 / 3.87	40 / 1.57	X	141	X	X	X	4	X
	AC N + 1	S1L-2C00V	1200W	PFC	279.4 / 11	98.4 / 3.87	40 / 1.57	X	100	X	X	X	4	X
	AC N + 1	S1M-5350P	350W	PFC	247.9 / 9.76	106 / 4.17	40 / 1.57	32	28	30	X	1	2	X
	AC N + 1	S1M-5460P	460W	PFC	247.9 / 9.76	106 / 4.17	40 / 1.57	32	32	30	X	1	2	X

NEW	FORM FACTOR	MODEL NAME	WATTAGE	INPUT	D (mm/inch)	W (mm/inch)	H (mm/inch)	+5V	+12V	+3.3V	-5V	-12V	+5VSB	+5V2
	AC N + 1	S1M-5500P	500W	PFC	247.9 / 9.76	106 / 4.17	40 / 1.57	32	32	30	X	1	2	X
	AC N + 1	S1M-5500V	500W	PFC	247.9 / 9.76	106 / 4.17	40 / 1.57	32	40	25	X	1	3.5	X
	AC N + 1	S1M-5550V	550W	PFC	247.9 / 9.76	106 / 4.17	40 / 1.57	32	45	25	X	1	3.5	X
New	AC N + 1	M1R-2300V	300W	PFC	256.5 / 10.1	50.5 / 1.99	40 / 1.57	X	25	X	X	X	3	X
New	AC N + 1	M1R-2400V	400W	PFC	256.5 / 10.1	50.5 / 1.99	40 / 1.57	X	33	X	X	X	3	X
New	AC N + 1	M1R-2500G	500W	PFC	256.5 / 10.1	50.5 / 1.99	40 / 1.57	X	41	X	X	X	3	X
New	AC N + 1	M1X-3552V	500W	PFC	205.3 / 8.08	98.4 / 3.87	40 / 1.57	X	45	X	X	0.8	3.5	X
	AC 1 + 1	MRT-6300P-R	300W	PFC	153 / 6.02	120 / 4.72	41.4 / 1.63	25	16	18	0.5	0.5	2	X
	AC 1 + 1	MRT-6320P-R	320W	PFC	153 / 6.02	120 / 4.72	41.4 / 1.63	25	16	18	0.5	0.5	2	X
	AC 1 + 1	R2A-5350P-R	350W	PFC	190 / 7.48	117 / 4.61	40.5 / 1.59	35	8	35	X	0.8	2	X
	AC 1 + 1	R2A-6300P-R	300W	PFC	190 / 7.48	117 / 4.61	40.5 / 1.59	32	16	20	0.5	0.8	1.5	X
	AC 1 + 1	R2A-6320P-R	550W	PFC	190 / 7.48	117 / 4.61	40.5 / 1.59	32	16	20	0.5	0.8	1.5	X
	AC 1 + 1	MRM-6550P-R	550W	PFC	220 / 8.66	137 / 5.39	40 / 1.57	28	41	28	0.8	1	2.5	X
	AC 1 + 1	MRM-6600P-R	600W	PFC	220 / 8.66	137 / 5.39	40 / 1.57	28	45	28	0.8	1	3.5	X
	AC 1 + 1	MRM-6650P-R	650W	PFC	220 / 8.66	137 / 5.39	40 / 1.57	30	48	28	0.8	1	3.5	X
	AC 1 + 1	MRW-6350P-R	350W	PFC	161 / 6.34	143 / 5.63	41.4 / 1.63	35	22	25	0.5	1.2	2	X
	AC 1 + 1	MRW-6400P-R	400W	PFC	161 / 6.34	143 / 5.63	41.4 / 1.63	35	28	25	0.5	1.2	2	X
	AC 1 + 1	MRW-6420P-R	420W	PFC	161 / 6.34	143 / 5.63	41.4 / 1.63	35	28	25	0.5	1.2	2	X
	AC 1 + 1	MRW-3450V-R	450W	PFC	161 / 6.34	143 / 5.63	41.4 / 1.63	X	37	X	X	0.8	3.5	X
	AC 1 + 1	MRW-3500V-R	500W	PFC	161 / 6.34	143 / 5.63	41.4 / 1.63	X	41	X	X	0.8	3.5	X
	AC 1 + 1	MRW-3600V-R	600W	PFC	161 / 6.34	143 / 5.63	41.4 / 1.63	X	49	X	X	0.8	3.5	X
	AC 1 + 1	MRT-2320G-R	320W	PFC	161 / 6.34	143 / 5.63	41.4 / 1.63	X	26	X	X	X	3	X
New	AC 1 + 1	MRT-2450G-R	450W	PFC	161 / 6.34	143 / 5.63	41.4 / 1.63	X	37	X	X	X	3	X
	AC 1 + 1	MRG-6460P-R	460W	PFC	176 / 6.93	143 / 5.63	41.4 / 1.63	35	32	25	0.8	1	2.5	X
	AC 1 + 1	MRG-6500P-R	500W	PFC	176 / 6.93	143 / 5.63	41.4 / 1.63	35	32	25	0.8	1	2.5	X
	AC N + 1	MPN1-5350P	350W	PFC	160 / 6.3	142 / 5.59	42 / 1.65	25	26	22	X	0.8	3	X
	AC N + 1	MPN1-5420P	420W	PFC	160 / 6.3	142 / 5.59	42 / 1.65	25	26	22	X	0.8	3	X
	AC 1 + 1	MRG-3700V-R	700W	PFC	176 / 6.93	143 / 5.63	41.4 / 1.63	X	57	X	X	0.8	3.5	X
	AC 1 + 1	MRG-3800V-R	800W	PFC	176 / 6.93	143 / 5.63	41.4 / 1.63	X	65	X	X	0.8	3.5	X
	DC N + 1	DR1U-2200V	200W	DC -48V	224 / 8.82	50.5 / 1.99	40 / 1.57	X	16	X	X	X	2	X
	DC N + 1	DR1V-2250V	250W	DC -48V	236 / 9.29	50.5 / 1.99	40 / 1.57	X	20	X	X	X	2.5	X
New	DC N + 1	DM1R-2500V	500W	DC -48V	256.5 / 10.1	50.5 / 1.99	40 / 1.57	X	41	X	X	X	3	X
New	DC N + 1	DM1Y-2152V	150W	DC -48V	236 / 9.29	50.5 / 1.99	40 / 1.57	X	12	X	X	X	2	X
New	DC N + 1	DM1Y-2300V	300W	DC -48V	236 / 9.29	50.5 / 1.99	40 / 1.57	X	25	X	X	X	3	X
New	DC N + 1	DM1Y-2302V	300W	DC -48V	236 / 9.29	50.5 / 1.99	40 / 1.57	X	24	X	X	X	3	X
	DC N + 1	BM1U-2500V	500W	DC 28V	300 / 11.81	50.5 / 1.99	40 / 1.57	X	41	X	X	X	3	X
	DC N + 1	DM1S-3400V	400W	DC -48V	300 / 11.81	50.5 / 1.99	40 / 1.57	X	33	X	X	0.8	3.5	X
	DC N + 1	DM1S-3500V	500W	DC -48V	300 / 11.81	50.5 / 1.99	40 / 1.57	X	41	X	X	0.8	3.5	X
	DC N + 1	DM1S-3401V	400W	DC -48V	300 / 11.81	50.5 / 1.99	40 / 1.57	X	33	X	X	0.8	3.5	X
	DC N + 1	DM1S-3501V	500W	DC -48V	300 / 11.81	50.5 / 1.99	40 / 1.57	X	41	X	X	0.8	3.5	X
	DC N + 1	DM1S-3551V	550W	DC -48V	300 / 11.81	50.5 / 1.99	40 / 1.57	X	45	X	X	0.8	3.5	X
	DC N + 1	DM1U-2650V	650W	DC -48V	300 / 11.81	50.5 / 1.99	40 / 1.57	X	54	X	X	X	3	X

NEW	FORM FACTOR	MODEL NAME	WATTAGE	INPUT	D (mm/inch)	W (mm/inch)	H (mm/inch)	+5V	+12V	+3.3V	-5V	-12V	+5VSB	+5V2
	DC N + 1	DM1U-2750V	750W	DC -48V	300 / 11.81	50.5 / 1.99	40 / 1.57	X	62	X	X	X	3	X
New	DC N + 1	DM1H-2A00V	1000W	DC -48V	350 / 13.78	50.5 / 1.99	40 / 1.57	X	83	X	X	X	3	X
	DC N + 1	DPSS-2A00V	1000W	DC -48V	310 / 12.2	61 / 2.4	40 / 1.57	X	83	X	X	X	3	X
	DC N + 1	BGIN-3420V	420W	DC 24V	250 / 9.84	79 / 3.11	40.5 / 1.59	X	33	X	X	0.8	3.5	X
	DC N + 1	BGIN-3460V	460W	DC 24V	250 / 9.84	79 / 3.11	40.5 / 1.59	X	37	X	X	0.8	3.5	X
	DC N + 1	DMIN-6221F	220W	DC -48V	200 / 7.87	79 / 3.11	40 / 1.57	25	16	15	0.5	0.5	2	X
	DC N + 1	DGIN-6350F	350W	DC -48V	250 / 9.84	79 / 3.11	40.5 / 1.59	35	22	20	0.5	0.8	2	X
	DC N + 1	DGIN-3500V	500W	DC 24V	250 / 9.84	79 / 3.11	40.5 / 1.59	X	40	X	X	0.8	3.5	X
	DC N + 1	DGIN-3600V	600W	DC 24V	250 / 9.84	79 / 3.11	40.5 / 1.59	X	48	X	X	0.8	3.5	X
	DC N + 1	DGIN-3800V	800W	DC -48V	305 / 12.01	79 / 3.11	40 / 1.57	X	65	X	X	0.8	3.5	X
	DC N + 1	DP1S-2300V-R	300W	DC -48V	170 / 6.69	81.5 / 3.21	40.3 / 1.59	X	24	X	X	X	2.5	X
	DC N + 1	DP1S-2400V-R	400W	DC -48V	170 / 6.69	81.5 / 3.21	40.3 / 1.59	X	33	X	X	X	2.5	X
	DC N + 1	BM1P-2250V	250W	DC 24V	180 / 7.09	81.5 / 3.21	40.3 / 1.59	X	20	X	X	X	3.5	X
	DC N + 1	DM1P-2500V	500W	DC -48V	180 / 7.09	81.5 / 3.21	40.3 / 1.59	X	41	X	X	X	3.5	X
	DC N + 1	BM1Z-5360V	360W	DC 24V	230 / 9.06	98.4 / 3.87	40 / 1.57	24	28	24	X	0.8	3.5	X
	DC N + 1	DM1Z-5500V	500W	DC -48V	230 / 9.06	98.4 / 3.87	40 / 1.57	24	40	24	X	0.8	3.5	X
	DC N + 1	DM1Z-5550V	550W	DC -48V	230 / 9.06	98.4 / 3.87	40 / 1.57	24	45	24	X	0.8	3.5	X
	DC N + 1	BG1W-3600V	600W	DC 24V	265.3 / 10.44	98.4 / 3.87	40 / 1.57	X	50	X	X	0.8	3.5	X
	DC N + 1	DG1W-3660V	660W	DC -48V	265.3 / 10.44	98.4 / 3.87	40 / 1.57	X	55	X	X	0.8	3.5	X
	DC N + 1	DG1W-3760V	760W	DC -48V	265.3 / 10.44	98.4 / 3.87	40 / 1.57	X	62	X	X	0.8	3.5	X
	DC N + 1	DG1W-3860V	860W	DC -48V	265.3 / 10.44	98.4 / 3.87	40 / 1.57	X	70	X	X	0.8	3.5	X
	DC N + 1	DG1W-3960V	960W	DC -48V	265.3 / 10.44	98.4 / 3.87	40 / 1.57	X	78	X	X	0.8	3.5	X
	DC N + 1	DG1W-3A10V	860W	DC -48V	265.3 / 10.44	98.4 / 3.87	40 / 1.57	X	83	X	X	0.8	3.5	X
	DC N + 1	DM1W-6460F	460W	DC -48V	265.3 / 10.44	98.4 / 3.87	40 / 1.57	27	32	24	0.7	0.7	2	X
	DC N + 1	DM1W-6500F	500W	DC -48V	265.3 / 10.44	98.4 / 3.87	40 / 1.57	27	32	24	0.7	0.7	2	X
	DC N + 1	DM1W-5600V	600W	DC -48V	265.3 / 10.44	98.4 / 3.87	40 / 1.57	32	45	36	X	0.8	3.5	X
	DC N + 1	DM1W-5650V	650W	DC -48V	265.3 / 10.44	98.4 / 3.87	40 / 1.57	32	50	36	X	0.8	3.5	X
	DC N + 1	DM1W-5700V	700W	DC -48V	265.3 / 10.44	98.4 / 3.87	40 / 1.57	32	55	36	X	0.8	3.5	X
	DC N + 1	DMTW-5660V	660W	DC -48V	265.3 / 10.44	98.4 / 3.87	40 / 1.57	32	50	36	X	0.8	3.5	X
	DC N + 1	DMTW-5820V	820W	DC -48V	265.3 / 10.44	98.4 / 3.87	40 / 1.57	32	67	36	X	0.8	3.5	X
	DC N + 1	DM1L-5600V	600W	DC -48V	295.3 / 11.63	98.4 / 3.87	40.5 / 1.59	32	45	36	X	0.8	3.5	X
	DC N + 1	DM1L-5650V	650W	DC -48V	295.3 / 11.63	98.4 / 3.87	40.5 / 1.59	32	50	36	X	0.8	3.5	X
	DC N + 1	DM1L-5700V	700W	DC -48V	295.3 / 11.63	98.4 / 3.87	40.5 / 1.59	32	55	36	X	0.8	3.5	X
	DC 1+1	DR2Z-6400F-R	400W	DC -48V	230.3 / 9.07	98.4 / 3.87	40 / 1.57	25	28	20	0.5	0.8	2	X
	DC Mini Redun-dant	BMRW-3360V-R	360W	DC 24V	161 / 6.34	143 / 5.63	41.4 / 1.63	X	28	X	X	0.8	3.5	X
	DC 1+1	DMRW-6350F-R	350W	DC -48V	161 / 6.34	143 / 5.63	41.4 / 1.63	32	25	25	0.5	1.2	2	X
	DC 1+1	DMRW-6375F-R	375W	DC -48V	161 / 6.34	143 / 5.63	41.4 / 1.63	32	25	25	0.5	1.2	2	X
	DC 1+1	DMRW-6400F-R	400W	DC -48V	161 / 6.34	143 / 5.63	41.4 / 1.63	32	25	25	0.5	1.2	2	X
	DC 1+1	DMRW-3500V-R	500W	DC -48V	161 / 6.34	143 / 5.63	41.4 / 1.63	X	41	X	X	0.8	3.5	X
	DC 1+1	DMRW-3600V-R	600W	DC -48V	161 / 6.34	143 / 5.63	41.4 / 1.63	X	45	X	X	0.8	3.5	X

MEMO

MEMO

MEMO

MEMO

MEMO