Apacer

CorePower Technology

Ensuring Data Integrity and the Stability of Data Transmission

Power loss can pose potential threats to an SSD's integrity. To ensure data integrity and the stability of data transmission in the event of a power outage, Apacer has developed the hardware-based technology called CorePower. It equips SSDs with powerful tantalum capacitors and a detect IC that can deliver sufficient urgent power current so that the flash controller can take this extended moment to flush cached and essential data into NAND Flash blocks.

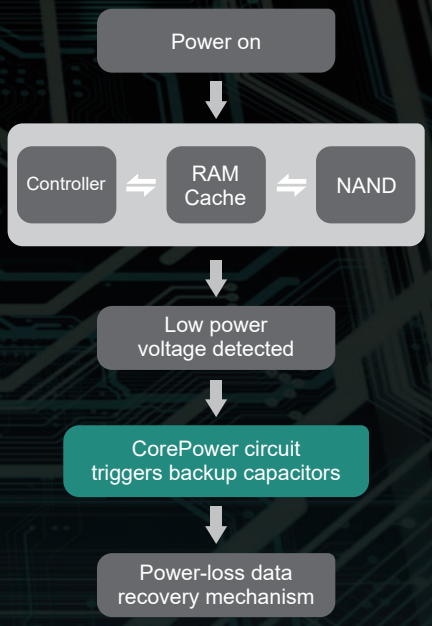

Firmware Solution + CorePower

Key Benefits

- Better Data Integrity
- Higher Reliability
- Stronger Stability

Recommended Products

Model Name	PV25P-M280	SV24P-25	SV24P-M280	SH25P-M280	PV25P-M242	SV25P-Cfast
Form Factor	M.2280	2.5"	M.2280	M.2280	M.2242	CFast
Interface	PCIe Gen4 x4	SATA 3.2 (6Gb/s)	SATA 3.2 (6Gb/s)	SATA 3.2 (6Gb/s)	PCIe Gen4 x4	SATA 3.2 (6Gb/s)
Connector	M.2 M Key	(7+15) pin male	M.2 B & M key	M.2 B & M key	M.2 M Key	(7+17) pin female
NAND Flash Type	3D TLC	3D TLC	3D TLC	3D TLC	3D TLC	3D TLC
Capacity	240GB-3840GB	240GB-1920GB	240GB-1920GB	40GB-640GB	240GB-960GB	120GB-960GB
External DRAM	No	Yes	Yes	No	No	No
Max. R/W Performance (MB/sec)	3700/3490	560/510	560/510	560/510	3740/2945	555/490
IOPs (4K Random R/W)	326K/620K	94K/80K	95K/80K	57K/69K	579K/590K	50K/59K
Standard Operating Temperature (°C)	0 ~ +70	0 ~ +70	0 ~ +70	0 ~ + 70	0 ~ + 70	0 ~ +70
Extended Operating Temperature (°C)	-40 ~ +85	-40 ~ +85	-40 ~ +85	-40 ~ + 85	-40 ~ + 85	-40 ~ +85
Storage Temperature (°C)	-55 ~ +100	-55 ~ +100	-55 ~ +100	-55 ~ + 100	-55 ~ + 100	-55 ~ +100
MTBF (hours)	>3,000,000	>3,000,000	>3,000,000	>3,000,000	>3,000,000	>3,000,000