EV2U-SGR2

USB2.0 Fixed Focus Camera Module

Preliminary

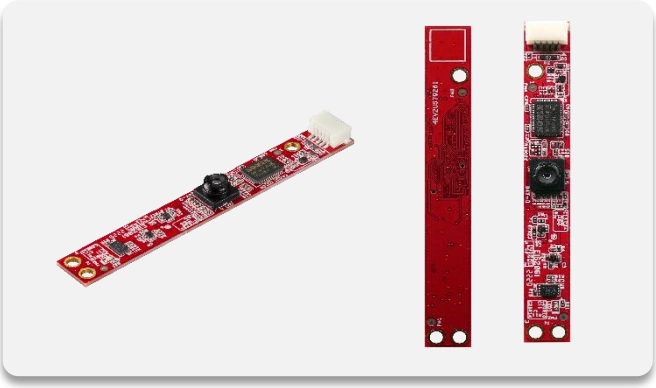

Features

- 1600x1200@15fps
- Lens D/H/V FOV:67°/55°/42°
- Aspect Ratio: 4:3
- OS Support: Windows, Linux, Android, MacOS (UVC)
- Compliant to USB2.0 and USB Video Class
- Complies with CE/FCC Class A

Mechanical Drawing

Mechanical Drawing

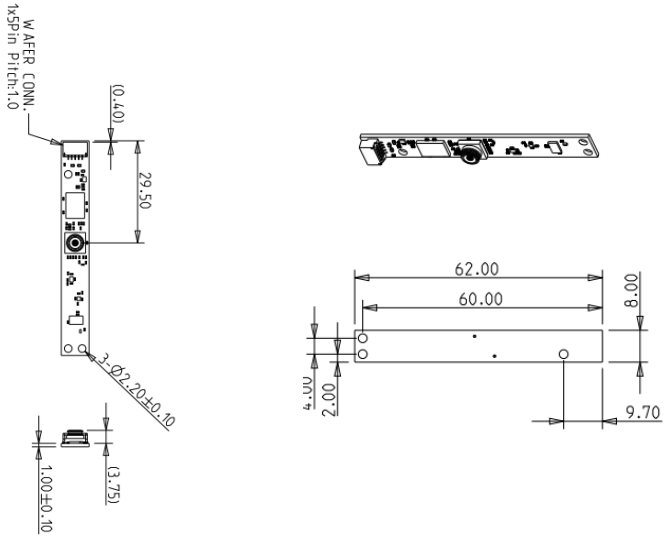

Lens Specification

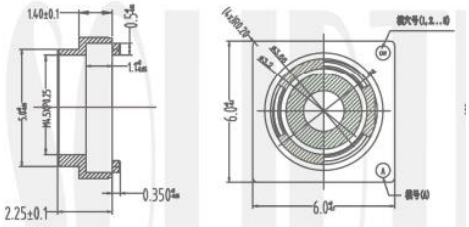

技術規格承認書 (Specifications for Approval)							
序號	名稱	規格	備註	序號	名稱	規格	備註
1	型號(Model no)	M115F2626-650		10	Optical Distortion	<2.0%	
2	感測器(Sensor)	GC2145(1/5 2MP CMOS)		11	光欄方式(Iris)	FIXED	
3	像高(Image Circle) 像素(PIXEL)	Φ3.9mm		12	分辨率(MTF)	2MP	
4	焦距(Focal Length)	2.62mm ± 5%		13	最近物距(M.O.D)	30 cm	
5	後焦距(Back Focal Length)	0.885mm ± 5%		14	接口(Mount)	M5xP0.25	
6	通光孔徑(Aperture F/no)	2.6 ± 5%		15	鏡頭組成(Lens Construction)	2P+IR Glass	
7	視場角(F.O.V.)(D/H/V)	67.1°/55.2°/42.6°		16	外形尺寸(Dimension)	6.0mmx6.0mm	
8	前後有效通光口徑	Φ2.8mm		17	Chief Ray Angle (CRA)	35.2°	
9	IR-CUT Coating Filter	650 ± 10nm		18	Relative Illumination (RI)	>58.0%	

Specifications

Resolution	1600x1200 @ 15fps
Output I/F	USB2.0
Power consumption	Approximate 1W
Dimension (WxLxH)	62 x 8 x 4.75 mm
Operating Temp.	-20°C ~ +50°C
Sensor Size	1/5”
Pixel Size	1.75um
Lens type	Fixed focus (M5)
Lens D/H/V FOV	67°/55°/42°
OS Support	Windows, Linux, Android, MacOS

Order information

EV2U-SGR2-MLCA-C1
USB2.0 Fixed Focus Camera Module
7W2000000160
USB2.0 cable 1 meter, 5 pins, pitch 1mm

Cable appearance

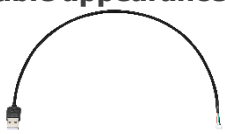

Headquarters (Taiwan)
5F., No. 237, Sec. 1, Datong Rd., Xizhi Dist., New Taipei City 221, Taiwan
Tel: +886-2-7703-3000
Email: sales@innodisk.com

Branch Offices:
USA
usasales@innodisk.com
+1-510-770-9421
Europe
eusales@innodisk.com
+31-40-3045-400
Japan
jpsales@innodisk.com
+81-3-6667-0161
China
sales_cn@innodisk.com
+86-755-2167-3689

www.innodisk.com

© 2019 Innodisk Corporation. All right reserved. Specifications are subject to change without prior notice.

December 27, 2022