# MCQ37AI Quick Reference Guide/ 快速测试参考指南

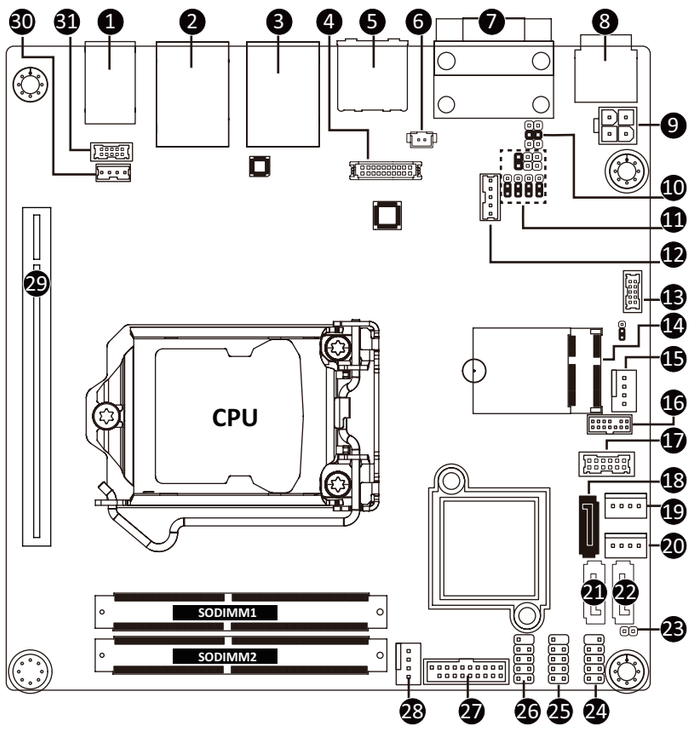


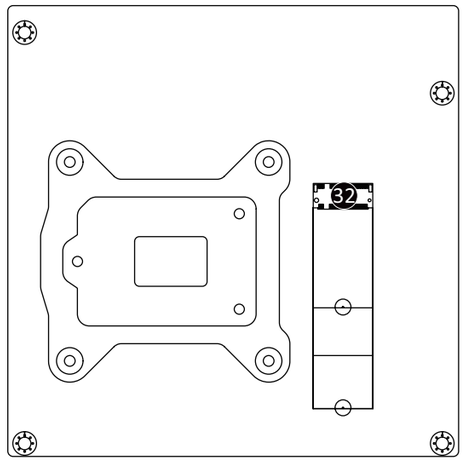

| No. | Code | Description |
|---|---|---|
| 1 | AUDIO | Audio Connectors |
| 2 | USB3_LAN2 | GbE Eternet LAN Port #2 (top)/USB 3.0 Port (bottom) |
| 3 | USB3_LAN1 | GbE Eternet LAN Port #1 (top)/USB 3.0/3.1 Port (bottom) |
| 4 | EDP | Embedded Display Port Connector |
| 5 | HDMI_DP | DisplayPort Connector (top)/HDMI Port (Bottom) |
| 6 | BATTERY | Battery Cable Connector |
| 7 | VGA_COM1 | Serial Port (top) / VGA Port (bottom) |
| 8 | DC_IN1 | DC In Power Connector |
| 9 | DC_IN2 | DC In 12V Power Connector |
| 10 | JCOM11 | 5V/12V/RI Signal Select Jumper for Serial Port #2 |
| 11 | JCOM12 | RS232/RS422/RS485 Select Jumper for Serial Port #2 |
| | JRS11/JRS12/ JRS13/JRS14 (Left to Right) | |
| 12 | BKL | Back Light Brightness Control Connector |
| 13 | COM2 | Serial Port Cable Connector #2 |
| 14 | M2E | M.2 slot (PCIe Gen2 x1, Support NGFF-2230, E-Key) |
| 15 | SYS_FAN | System Fan Connector |
| 16 | GPIO_CNT | GPIO Connector |
| 17 | TPM | TPM Module Connector |
| 18 | SATA_3 | SATA 3 6Gb/s Connector #3 |
| 19 | SATA_PWR1 | SATA #3 Hard Drive Power Connector |
| 20 | SATA_PWR2 | SATA #3 Hard Drive Power Connector |
| 21 | SATA2 | SATA 3 6Gb/s Connector #2 |
| 22 | SATA0 | SATA 3 6Gb/s Connector #0 |
| 23 | CASE_OPEN | Case Open Intrusion Alert Header |
| 24 | SYS_PANEL | Front Panel Header |
| 25 | FUSB2_2 | USB 2.0 Connector #2 |
| 26 | FUSB2_1 | USB 2.0 Connector #1 |
| 27 | FUSB3 | USB 3.0 Connector |
| 28 | CPU_FAN | CPU Fan Connector |
| 29 | PCIEX16 | PCI Express x16 Slot |
| 30 | SPK_OUT | Audio Amplifie Connector |
| 31 | FP_AUDIO | Front Audio Connector |
| 32 | M2_M | M.2 slot (PCIe Gen3 x4, Support NGFF-2210, M-Key) |

## Rear I/O Connector/ 后面板接口

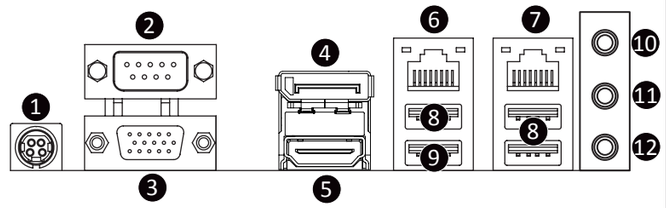

| No. | Desription |
|---|---|
| 1 | DC In Power Connector |
| 2 | Serial Port |
| 3 | VGA Port |
| 4 | DisplayPort Connector |
| 5 | HDMI Port |
| 6 | GbE Eternet LAN Port #1 |
| 7 | GbE Eternet LAN Port #2 |
| 8 | USB 3.0 Port x 3 |
| 9 | USB 3.1 Port |
| 10 | Line In |
| 11 | Line Out |
| 12 | Mic In |

HDMI™ HIGH-DEFINITION MULTIMEDIA INTERFACE

The HDMI connector is HDCP compliant and supports Dolby True HD and DTS HD Master Audio formats. It also supports up to 192KHz/24bit 8-channel LPCM audio output. You can use this port to connect your HDMI-supported monitor. The maximum supported resolution is 4096x2160@24Hz or 2560x1600@60Hz, but the actual resolutions supported are dependent on the monitor being used.

Speed LED Link/Activity LED

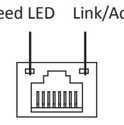

10/100/1000 LAN LED:

| State | Description |
|---|---|
| Yellow On | 1Gbps data rate |
| Green On | 100Mbps data rate |
| Off | 10Mbps data rate |

## DC In 12V Power Connector

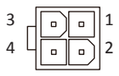

| No. | Pin Define |
|---|---|
| 1 | GND |
| 2 | GND |
| 3 | +12V |
| 4 | +12V |

## CPU FAN/ 风扇

| No. | Pin Define |
|---|---|
| 1 | GND |
| 2 | +12V |
| 3 | Sense |
| 4 | Speed Control |

## Front Audio Connector/ 前置音频

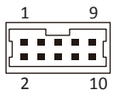

| No. | Pin Define | No. | Pin Define |
|---|---|---|---|
| 1 | MIC_L | 6 | GND |
| 2 | GND | 7 | FAUDIO_JD |
| 3 | MIC_R | 8 | No Connect |
| 4 | -ACZ_DET | 9 | HPOUT_L |
| 5 | HPOUT_R | 10 | GND |

## Audio Amplifie Connector

| No. | Pin Define |
|---|---|
| 1 | Speaker Out L+ |
| 2 | Speaker Out L- |
| 3 | Speaker Out R- |
| 4 | Speaker Out R+ |

## M.2 Module

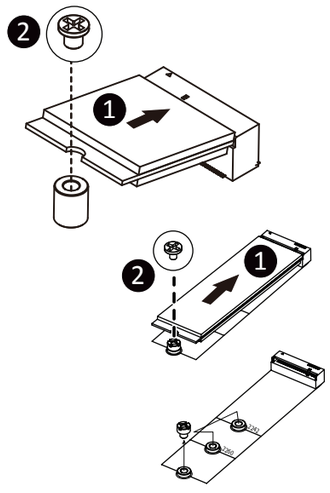

## System Panel Header/ 前面板

| No. | Pin Define |
|---|---|
| 1 | HDD LED+ |
| 2 | Power LED+ |
| 3 | HDD LED- |
| 4 | Power LED- |
| 5 | GND |
| 6 | Power Button+ |
| 7 | Reset Button |
| 8 | Power Button- |
| 9 | No Connect |
| 10 | No Pin |

## SATA Connector/SATA 接口

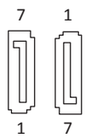

| No. | Pin Define |
|---|---|
| 1 | GND |
| 2 | TXP |
| 3 | TXN |
| 4 | GND |
| 5 | RXN |
| 6 | RXP |
| 7 | GND |

## Battery Cable Connector

| No. | Pin Define |
|---|---|
| 1 | Battery+ |
| 2 | GND |

## Hard Drive Power Connector

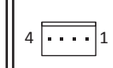

| No. | Pin Define |
|---|---|
| 1 | +12V |
| 2 | GND |
| 3 | GND |
| 4 | VCC |

## Back Light Brightness Control Connector

| No. | Pin Define |
|---|---|
| 1 | VCC_LVDS |
| 2 | PWM_OUT |
| 3 | EN_BKLT |
| 4 | GND |
| 5 | +12V_LVDS |

## GPIO Connector

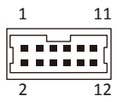

| No. | Pin Define | No. | Pin Define |
|---|---|---|---|
| 1 | SOGPO1 | 7 | SOGPO4 |
| 2 | SOGPI1 | 8 | SOGPI4 |
| 3 | SOGPO2 | 9 | SMB_CLK |
| 4 | SOGI2 | 10 | SMB_DATA |
| 5 | SOGPO3 | 11 | VCC |
| 6 | SOGPI3 | 12 | GND |

## USB 3.0 Header

| No. | Pin Define | No. | Pin Define |
|---|---|---|---|
| 1 | Power | 11 | IntA_P2_D+ |
| 2 | IntA_P1_SSRX- | 12 | IntA_P2_D- |
| 3 | IntA_P1_SSRX+ | 13 | GND |
| 4 | GND | 14 | IntA_P2_SSTX+ |
| 5 | IntA_P1_SSTX- | 15 | IntA_P2_SSTX- |
| 6 | IntA_P1_SSTX+ | 16 | GND |
| 7 | GND | 17 | IntA_P2_SSRX+ |
| 8 | IntA_P1_D- | 18 | IntA_P2_SSRX- |
| 9 | IntA_P1_D+ | 19 | Power |
| 10 | NC | 20 | No Pin |

## USB 2.0 Header

| No. | Pin Define |
|---|---|
| 1 | Power (5V) |
| 2 | Power (5V) |
| 3 | USB DX- |
| 4 | USB DY- |
| 5 | USB DX+ |
| 6 | USB DY+ |
| 7 | GND |
| 8 | GND |
| 9 | No Pin |
| 10 | No Connect |

## Serial Port Cable Connector

| No. | Pin Define |
|---|---|
| 1 | NRXD- |
| 2 | NDCD- |
| 3 | NDTRD- |
| 4 | NTXD- |
| 5 | NDSR- |
| 6 | GND |
| 7 | NCTS- |
| 8 | NRTS- |
| 9 | No Connect |
| 10 | RI- |

## TPM Connector/ 可信平台模块

| No. | Pin Define | No. | Pin Define |
|---|---|---|---|
| 1 | CLK_24M_TPM | 8 | NC |
| 2 | P_3V3_AUX | 9 | LPC_LAD_2 |
| 3 | RST_PLTRST | 10 | KEY |
| 4 | P3V3 | 11 | LPC_LAD_3 |
| 5 | LPC_LAD_0 | 12 | GND |
| 6 | IRQ_SERIAL | 13 | LPC_FRAME_N |
| 7 | LPC_LAD_1 | 14 | GND |

## TPM Module

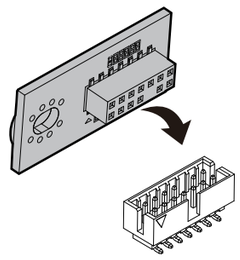

## Installing CPU/ 安装 CPU

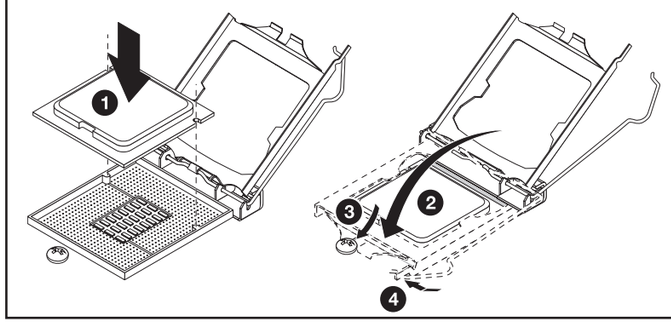

## Embedded Display Port connector

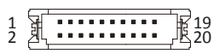

| No. | Pin Define | No. | Pin Define |
|---|---|---|---|
| 1 | GND | 11 | eDP_1+ |
| 2 | GND | 12 | eDPAUX- |
| 3 | eDP_0- | 13 | GND |
| 4 | eDP_3- | 14 | ePDAUX+ |
| 5 | eDP_0+ | 15 | eDP_2- |
| 6 | eDP_3+ | 16 | GND |
| 7 | GND | 17 | eDP_2+ |
| 8 | -eDPSW | 18 | eDP_HDP_C |
| 9 | eDP_1- | 19 | VCC_LVDS |
| 10 | GND | 20 | VCC3_LVDS |

NOTE!
Please ensure pin 8 is connected to Ground.

## Jumper Settings/ 跳线设置

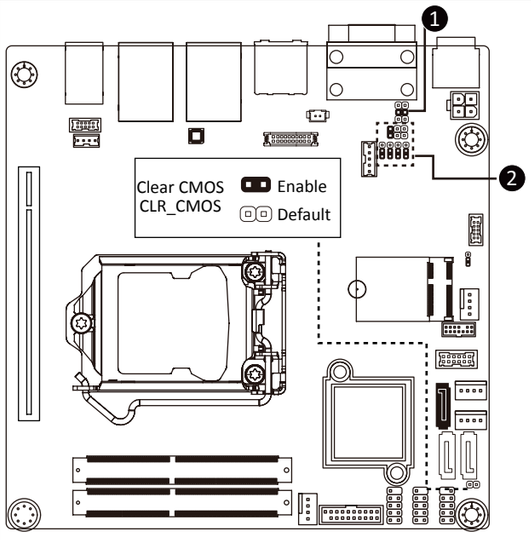


| No. | Desription |
|---|---|
| 1 | 5V/12V/RI Signal Select Jumper for Serial Port Header#1 (JCOM11) |

1-2 Close: 5V (Power COM)

3-4 Close: RI (Stand COM)

5-6 Close: 12V (power COM)

| Pin No. | Definition |
|---|---|
| 1 | VCC |
| 2 | RI1-/5V/12V |
| 3 | NRI1- |
| 4 | RI1-/5V/12V |
| 5 | +12V |
| 6 | RI1-/5V/12V |

2 RS232/RS422/RS485 Select Jumper for Serial Port Header#1 (JRS11/JRS12/JRS13/JRS14 )

1-2 Close: RS232

3-4 Close: RS422

5-6 Close: RS485

| Pin No. | Definition |
|---|---|
| 1 | RXD232 |
| 2 | RXD2 |
| 3 | RXD422 |
| 4 | RXD2 |
| 5 | RXD485 |
| 6 | RXD2 |

1-2 Close: RS422/RS485

2-3Close: RS232 (Default setting)

## Memory Population Configuration/ 安装内存

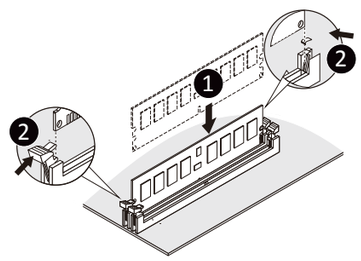

| Memory Type | DDR4 | |
|---|---|---|
| Voltage (V) | 1.2V | |
| Connector | UDIMM | |
| Speed (MT/s) | 2666 | 2400 |
| Channels | 1,2 | |
| DIMM Per Channel | 1,2 | |
| DIMM Capacity (GB) | 2,4,6,8 | |

PN: