EGPL-T102

M.2 2280 to single 10GbE LAN Module

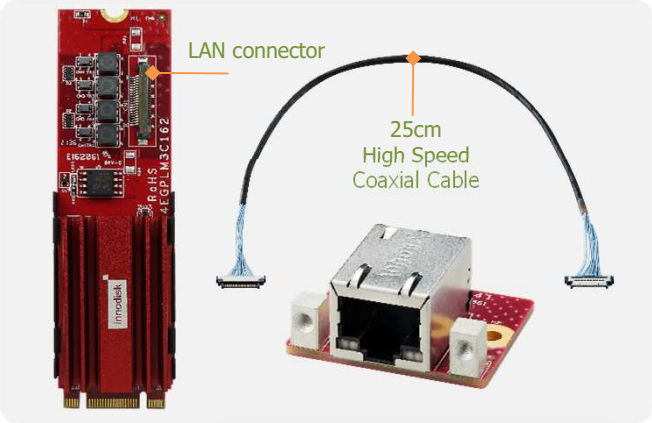

Features

- Marvell AQtion Ethernet Controller
- Support 10G/5G/2.5G/1000M/100M/10M LAN speed
- Lowest power and smallest 10GbE expansion solution
- Support x2/x1 PCI Express with Gen3/Gen2
- Tiny daughter board with high speed shielding cable
- Support Precision Time Protocol (PTP-1588v2)/AVB
- Complies with EN61000-4-2 (ESD) Air-15kV, Contact-8kV
- Operation temperature -20°C to +55°C support
- 30μ" golden finger, 3-year warranty
- Industrial design, manufactured in Innodisk Taiwan

Mechanical Drawing

Main Board

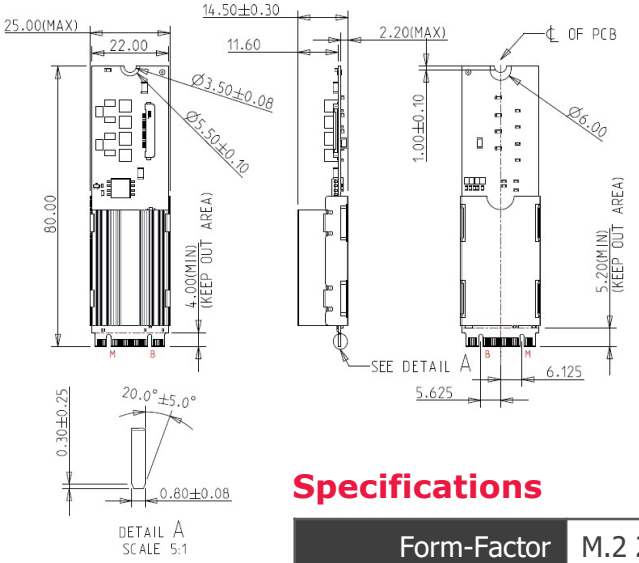

Daughter Board

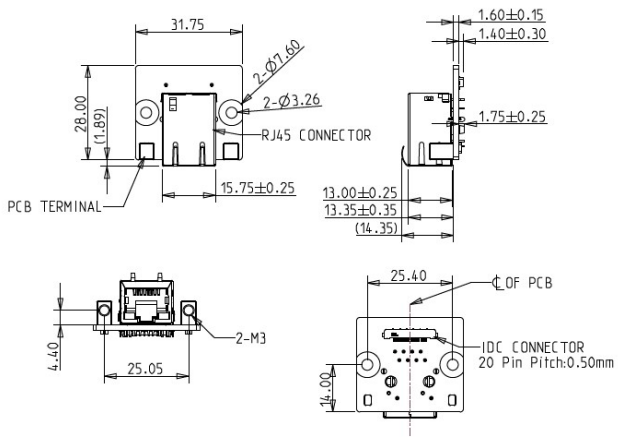

Specifications

Form-Factor	M.2 2280 B-M
Input I/F	PCI Express 3.0 x 2
Output I/F	Single 10 GbE LAN
Output Connector	RJ45 x 1
Power Consumption	MAX: 3.524W (3.3V, 1068mA)
Dimension (WxLxH)	M.2 Board: 22 x 80 x 14.5 mm Daughter Board: 31.75 x 28 x 17.7 mm
Temperature	Operation: -20˚C ~ +60˚C Storage: -55˚C ~ +95˚C
Environment	Vibration: 5G @7~2000Hz, Shock: 50G @ 0.5ms
Notes	Please download driver from MyInnodisk website. Supported Operation System: Microsoft Windows System 10 and later releases Linux Kernel 3.10 and later releases

Order information

EGPL-T102-C1
M.2 2280 to Single 10GbE LAN Module
EGPL-T102-C2
M.2 2280 to Single 10GbE LAN Module, with bracket

Headquarters (Taiwan)
5F., No.237, Sec. 1, Datong Rd., Xizhi Dist., New Taipei City 221, Taiwan

Tel: +886-2-7703-3000
Email: sales@innodisk.com

Branch Offices:
USA
usasales@innodisk.com
+1-510-770-9421
Europe
eusales@innodisk.com
+31-40-3045-400
Japan
jpsales@innodisk.com
+81-3-6667-0161
China
sales_cn@innodisk.com
+86-755-21673689

www.innodisk.com

© 2024 Innodisk Corporation. All right reserved. Specifications are subject to change without prior notice.

August 16, 2024