HD330-Q87

Desktop

Q87

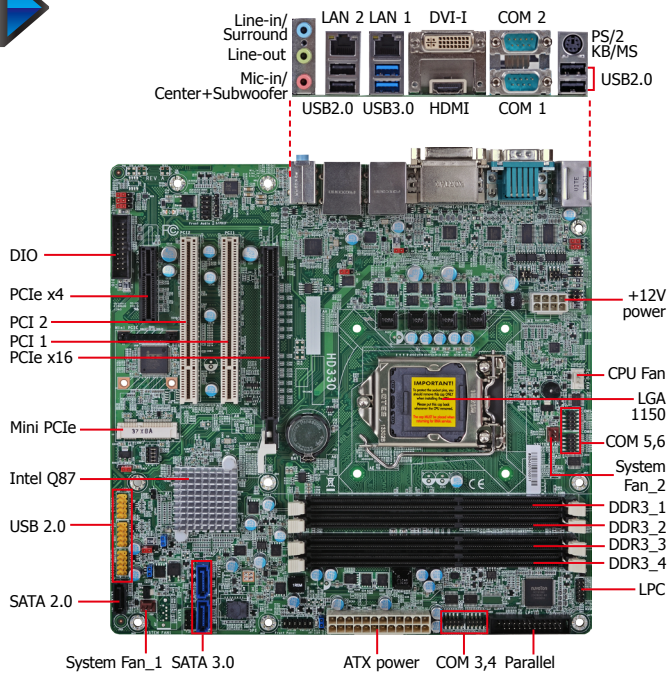

E131107

Model Name	LAN	COM
HD330-Q87CR	2	2 RS232/422/485, 4 RS232

Features

MEMORY	4 DDR3 DIMM up to 32GB
EXPANSION	1 PCIe x16
	1 PCIe x4
	2 PCI
	1 Mini PCIe
DISPLAY OUTPUTS	1 HDMI, 1 DVI-I
LAN	2 LAN
COM	6 COM
USB	12 USB: 2 USB 3.0, 10 USB 2.0
PARALLEL	1 Parallel
STORAGE	3 SATA: 2 SATA 3.0, 1 SATA 2.0
DIO	8-bit DIO

Mechanical Drawing

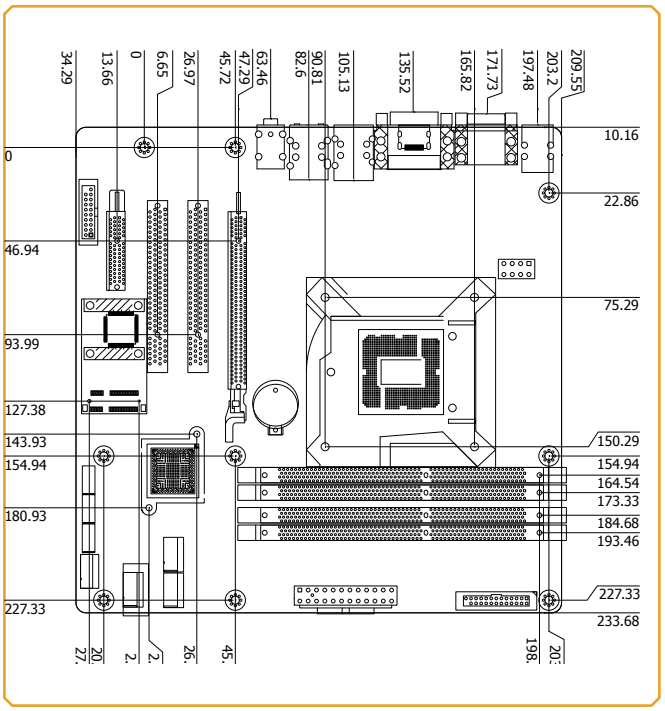

Block Diagram

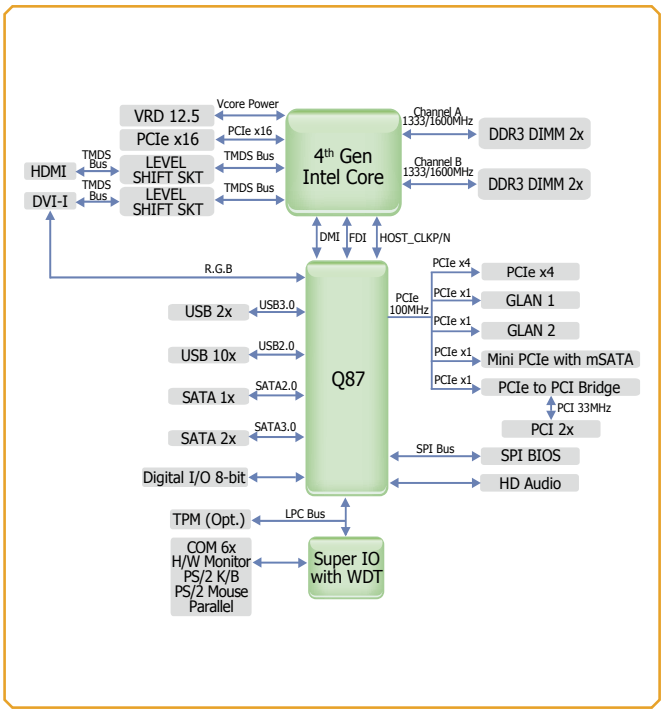

HD330-Q87

Specifications

** Optional and is not supported in standard model. Please contact your sales representative for more information.*

PROCESSOR
- LGA 1150 socket for:
  - 4th Generation Intel® Core™ processors (22nm process technology)
    - : Intel® Core™ i7-4790S (8M Cache, up to 4.0 GHz); 65W
    - : Intel® Core™ i7-4770S (8M Cache, up to 3.9 GHz); 65W
    - : Intel® Core™ i7-4770TE (8M Cache, up to 3.3 GHz); 45W
    - : Intel® Core™ i5-4590S (6M Cache, up to 3.7 GHz); 65W
    - : Intel® Core™ i5-4590T (6M Cache, up to 3.0 GHz); 35W
    - : Intel® Core™ i5-4570S (6M Cache, up to 3.6 GHz); 65W
    - : Intel® Core™ i5-4570TE (4M Cache, up to 3.3 GHz); 35W
    - : Intel® Core™ i3-4360 (4M Cache, 3.7 GHz); 54W
    - : Intel® Core™ i3-4350T (4M Cache, 3.1 GHz); 35W
    - : Intel® Core™ i3-4340TE (4M Cache, 2.6 GHz); 35W
    - : Intel® Core™ i3-4330 (4M Cache, 3.5 GHz); 54W
    - : Intel® Core™ i3-4330TE (4M Cache, 2.4 GHz); 35W
    - : Intel® Pentium® G3420 (3M Cache, 3.2 GHz); 53W
    - : Intel® Pentium® G3320TE (3M Cache, 2.3 GHz); 35W
    - : Intel® Celeron® G1820 (2M Cache, 2.7 GHz); 53W
    - : Intel® Celeron® G1820TE (2M Cache, 2.2 GHz); 35W

CHIPSET
- Intel® Q87 Express Chipset

SYSTEM MEMORY
- 4个 240-pin DDR3 DIMM sockets
- Supports DDR3 1333/1600MHz
- Supports dual channel memory interface
- Supports up to 32GB system memory
- DRAM device technologies: 1Gb, 2Gb and 4Gb DDR3 DRAM technologies are supported for x8 and x16 devices, unbuffered, non-ECC

EXPANSION SLOTS
- 1 PCIe x16 Gen 3 slot (PCIe 3.0)
- 1 PCIe x4 Gen 2 slot (PCIe 2.0)
- 2 PCI slots (PCI 2.3)
- 1 Mini PCIe slot
  - Supports USB and PCIe signals
  - Supports mSATA
  - Supports half size and/or full size Mini PCIe card

ONBOARD GRAPHICS FEATURES
- Intel® HD Graphics
- Display ports: 1 HDMI, 1 DVI-I
- HDMI: resolution up to 4096x2304 @ 24Hz or 2560x1600 @ 60Hz
- DVI-I: resolution up to 1920x1200 @ 60Hz
- VGA: 24-bit, resolution up to 1920x1200 @ 60Hz
- Supports 20 Graphics Execution Units (EUs)
- Intel® Clear Video Technology
- DirectX Video Acceleration (DXVA) support for accelerating video processing
- Supports DirectX 11.1 and OpenGL 4.0

ONBOARD AUDIO FEATURES
- Realtek ALC886 5.1-channel High Definition Audio
- Audio outputs: Mic-in/Center+Subwoofer, line-in/surround and line out
- S/PDIF audio interface

ONBOARD LAN FEATURES
- Intel® I210 PCI Express Gigabit Ethernet controller
- Intel® I217LM Gigabit Ethernet Phy
- Integrated 10/100/1000 transceiver
- Fully compliant with IEEE 802.3, IEEE 802.3u, IEEE 802.3ab

SERIAL ATA (SATA) INTERFACE
- 2 SATA 3.0 ports with data transfer rate up to 6Gb/s
- 1 SATA 2.0 port with data transfer rate up to 3Gb/s
- Integrated Advanced Host Controller Interface (AHCI) controller
- Supports RAID 0/1/5
- Supports Intel® Smart Response Technology

TRUSTED PLATFORM MODULE (TPM)*
- Provides a Trusted PC for secure transactions
- Provides software license protection, enforcement and password protection

USB INTERFACE
- XHCI Host Controller supports up to 2 super speed USB 3.0 ports

REAR PANEL I/O PORTS
- 1 mini-DIN-6 port for PS/2 mouse/keyboard
- 2 USB 3.0/2.0/1.1 ports
- 4 USB 2.0/1.1 ports
- 2 DB-9 RS232/422/485 serial ports (RS232 and/or Power)
- 1 HDMI ports
- 1 DVI-I ports
- 2 RJ45 LAN ports
- Line-in/surround, Line-out, and Mic-in/Center+Subwoofer jacks

I/O CONNECTORS
- 3 connectors for 6 external USB 2.0/1.1 ports
- 4 connectors for 4 external RS232 serial ports (2.0mm pitch)
- 1 parallel connector
- 1 8-bit Digital I/O connector
- 1 front audio connector for line-out and mic-in jacks
- 1 S/PDIF connector
- 1 LPC connector
- 3 Serial ATA ports
- 1 24-pin ATX power connector
- 1 8-pin 12V power connector
- 1 chassis intrusion connector
- 1 front panel connector
- 3 fan connectors

BIOS
- AMI BIOS
  - 64Mbit SPI BIOS

WATCHDOG TIMER
- Software programmable from 1 to 255 seconds

ENERGY EFFICIENT DESIGN
- Supports ErP Lot6 power saving*
- Supports ACPI
- System Power Management
- Wake-On-Events include:
  - Wake-On-PS/2 KB/Mouse
  - Wake-On-USB KB/Mouse
  - Wake-On-LAN
  - RTC timer to power-on the system
- CPU stopped clock control
- AC power failure recovery

DAMAGE FREE INTELLIGENCE
- Monitors CPU/system temperature and overheat alarm
- Monitors VCORE/5V/3.3V/V_DIMM/12V/3VSB/VBAT voltages and failure alarm
- Monitors CPU/system fan speed and failure alarm
- Read back capability that displays temperature, voltage and fan speed

POWER CONSUMPTION
- 54.23W with i7-4770S at 3.10GHz and 1x 2GB DDR3 DIMM

OS SUPPORT
- Windows XP Professional x86 & SP3 (32-bit) (limited function)
- Windows 7 Ultimate x86 & SP1 (32-bit)
- Windows 7 Ultimate x64 & SP1 (64-bit)
- Windows 8 Enterprise x86 (32-bit)
- Windows 8 Enterprise x64 (64-bit)

Note: Windows 10 will be available upon request. Please contact DFI for more information.

TEMPERATURE
- Operating: 0°C to 60°C
- Storage: -20°C to 85°C

HUMIDITY
- 5% to 90%

MTBF
- 434,415 hrs @ 25°C; 243,382 hrs @ 45°C
- Calculation model: Telcordia Issue 2, Method I Case 3
- Environment: GB, GC – Ground Benign, Controlled

DIMENSIONS
- microATX form factor
- 244mm (9.6") x 244mm (9.6")

CERTIFICATION
- CE, FCC Class B, RoHS, UL

Packing List

- 1 HD330 motherboard
- 1 Serial ATA data cable
- 1 I/O shield
- 1 DVD

Optional Items

- USB port cable
- Serial ATA data cable
- I/O shield

DFI reserves the right to change the specifications at any time prior to the product's release. Changes thereafter will be based on the product's revision. Please contact your sales representative for the exact revision offered in your area. All product names mentioned are trademarks of their respective companies. © Oct. 19, 2016 DFI Inc.