KS156P-TGU

15.6" Industrial Touch Panel PC

KEY FEATURES

CPU Performance

Intel® Core™ i5-1145GRE, Quad Core
Intel® Celeron® 6305E, Dual Core

Touch Type

Projected Capacitive Touch

Dual Display

HDMI + DP++

Multiple Expansions

M.2 2242/2280 M Key
M.2 2242/3042/3052 B Key
M.2 2230 E Key

Wide Voltage

Support 9 ~ 36V

PANEL

Top View

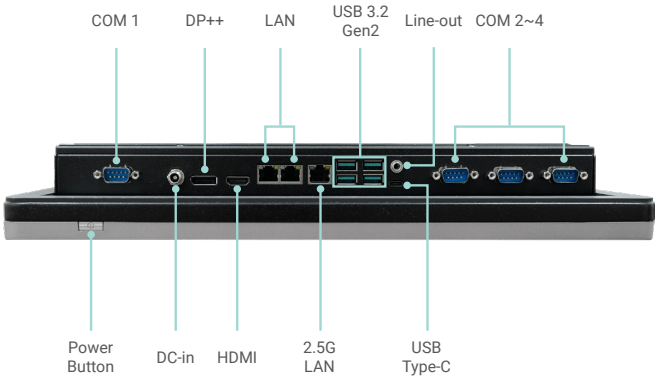

Bottom View

DIMENSIONS

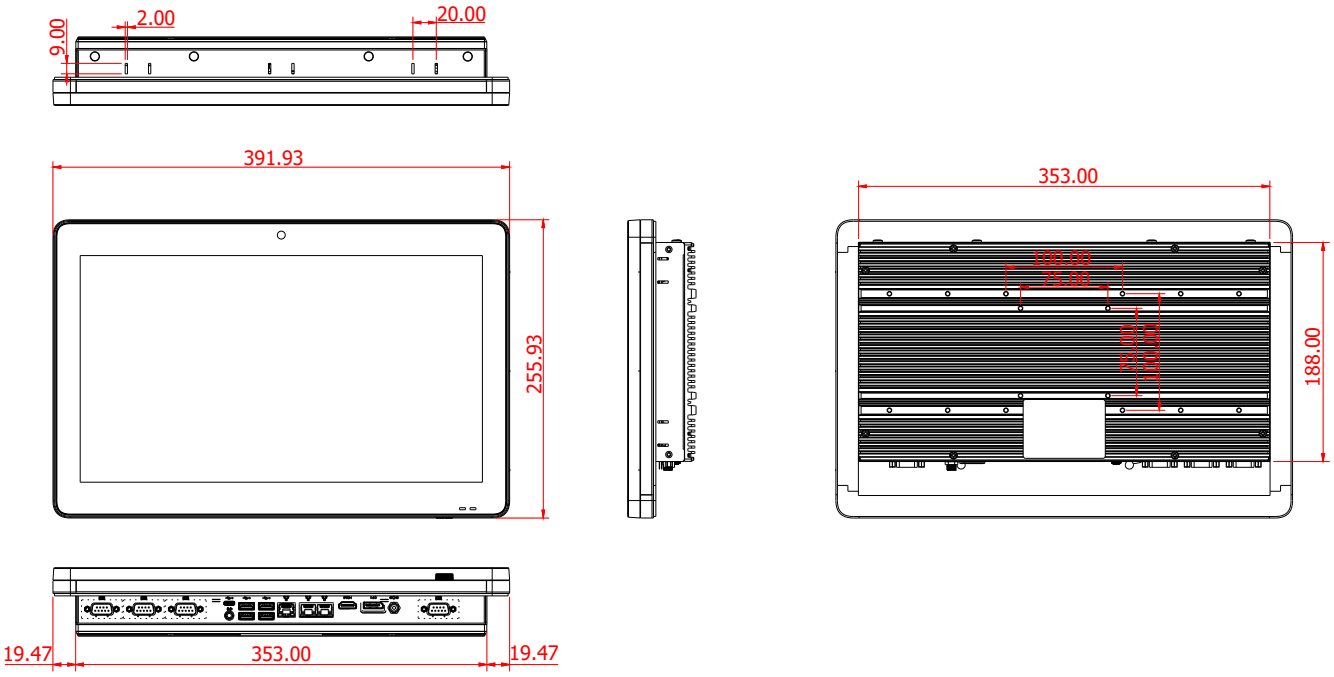

VESA MOUNTING

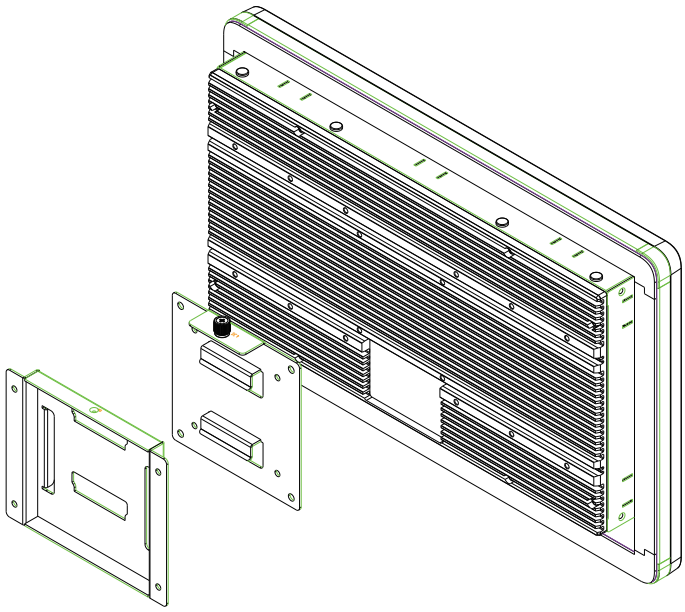

PANEL MOUNTING

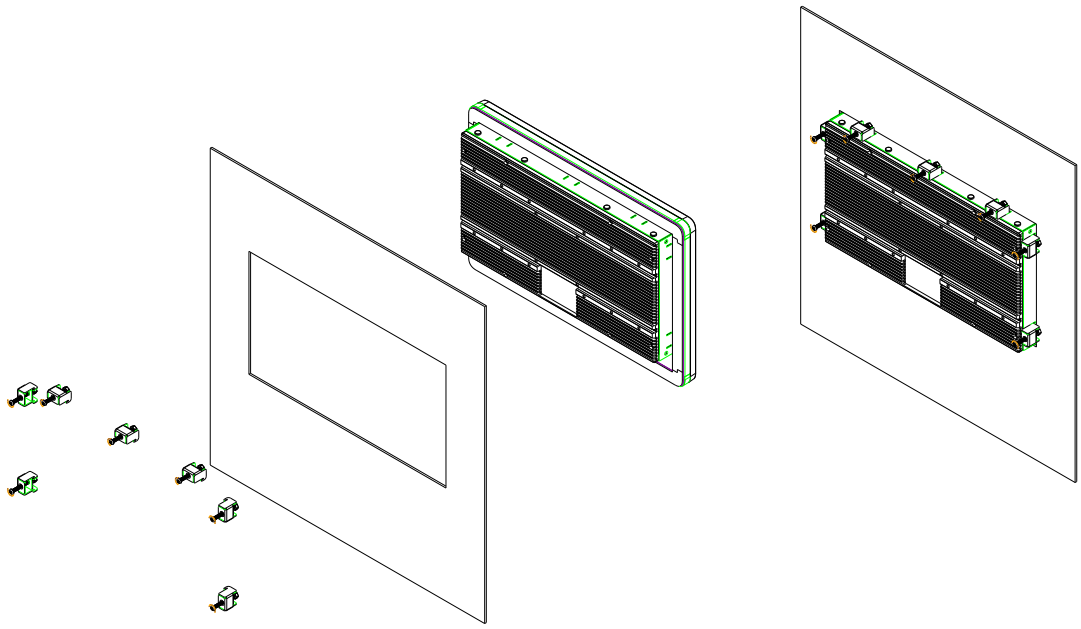

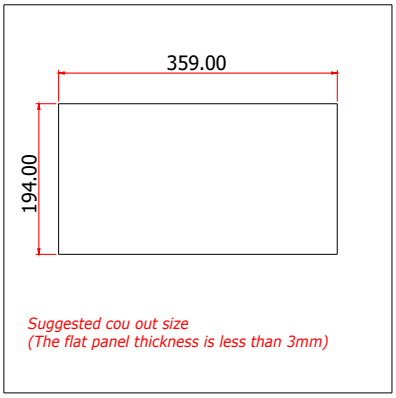

SPECIFICATION

DISPLAY AND TOUCH SCREEN	Display	15.6" TFT LCD Panel
	Contrast	16 : 9
	Max. Resolution	1920 x 1080
	Touch Type	Projected Capacitive
	Brightness	400 (cd/m2)
	Backlight Lifetime	50,000 (hours)
SYSTEM	Processor	Intel® Core™ i5-1145GRE, Quad Core, 8M Cache, 1.5GHz (4.1GHz), 15W Intel® Celeron® 6305E, Dual Core, 4M Cache, 1.8GHz (1.8GHz), 15W
	Memory	Two 260-pin SODIMM up to 64GB (32GB per slot) Dual channel DDR4 up to 3200MHz
	BIOS	AMI SPI 256Mbit
GRAPHICS	Controller	Intel® Iris® Xe Graphics for i7/i5 Processors Intel® UHD Graphics for i3/Celeron Processors
	Feature	OpenGL 4.5, DirectX 12, OpenCL 2.1 HW Decode: WMV9, AVC/H264, JPEG/MJPEG, HEVC/H265, VP9, AV1 HW Encode: AVC/H264, JPEG, HEVC/H265, VP9
	Display	1 x DP++ 1 x HDMI 2.0 DP++: resolution up to 3840x2160 @ 60Hz HDMI: resolution up to 3840x2160 @ 24Hz
	Dual Displays	DP++ + HDMI
STORAGE	External	1 x 2.5" SATA 3.0 Drive Bay
EXPANSION	Interface	1 x M.2 2242/2280 M Key (PCIe Gen4 x4) 1 x M.2 2242/3042/3052 B Key (PCIe Gen3 x1/SATA/USB 3.1 Gen1) 1 x M.2 2230 E Key (USB2.0)
I/O	Ethernet	2 x GbE 1 x 2.5GbE
	Serial	2 x RS-232/422/485 2 x RS-232
	USB	4 x USB 3.1 Gen2 1 x USB Type-C (Support USB 3.1 Gen2, 15W power delivery and DP Alt mode)
	Display	1 x DP++ 1 x HDMI
	Audio	1 x line-out
	Button	1 x Power Button
POWER	Type	DC 9-36V
	Connector	DC Jack
OS SUPPORT	Microsoft	Windows 10 IoT Enterprise 64bit
	Linux	Linux
MECHANISM	Construction	Plastic + Sheet Metal
	Mounting	VESA mount 100 x 100
	IP Rating	IP65 Front Panel Protection without power button
	Dimensions(W x H x D)	392 x 256 x 58.7 mm
	Weight	4.5KG
ENVIRONMENT	Operating Temperature	0 ~ 50°C
	Storage Temperature	-30 ~ 80°C
	Relative Humidity	10 to 95% @ 40°C, non-condensing
STANDARDS AND CERTIFICATION	Shock	OP: Half-sine, 3G @ 11ms Non-OP: Half-sine, 5G @ 11ms
	Vibration	OP: Random, 1Grms @ 5~500Hz, 30min Non-OP: Sweep sine, 3Grms @ 10~500Hz, 30min
	Certifications	CE, FCC Class A, RoHS, UKCA, KC

ORDERING INFORMATION

Model Name	Part Number	Description
KS156P-TGUW36-45G	750-KS156P3-000G	KS156P-TGUW36: 15.6" TFT WXGA Fan-less Panel PC with Projected Capacitive Touch, Intel® Core i5-1145GRE, DC Input 9-36V DC jack, F/G SYSTEM RoHS
KS156P-TGUW36-05E	750-KS156P3-100G	KS156P-TGUW36: 15.6" TFT WXGA Fan-less Panel PC with Projected Capacitive Touch, Intel® Celeron 6305E, DC Input 9-36V DC jack, F/G SYSTEM RoHS

OPTIONAL ITEMS

Optional Items	Part Number	Description
Power Cord	785-PWRD	Power Cord; Stand(USA/EUR/CH), 1.8m, RoHS
Power Adapter	671-106012-000G	60W,12V/5A,Level 6, RoHS
	671-112005-100G	120W,24/5A,Leve6, RoHS
Panel Mount	761-TPC120-000G	ACCESSORY PANEL MOUNT KITS, RoHS

Please contact your regional sales representative if you need memory and storage information.

PACKING LIST

1 KS156P-TGU Touch Panel PC
1 Poron foam
1 Quick Installation Guide

DFI reserves the right to change the specifications at any time prior to the product's release. Changes thereafter will be based on the product's revision. Please contact your sales representative for the exact revision offered in your area. All product names mentioned are trademarks of their respective companies. © December 28, 2024 DFI Inc.