ADN553

Atom

Intel® Atom® Alder Lake-N Processors
3.5" SBC

IoT Solutions Alliance

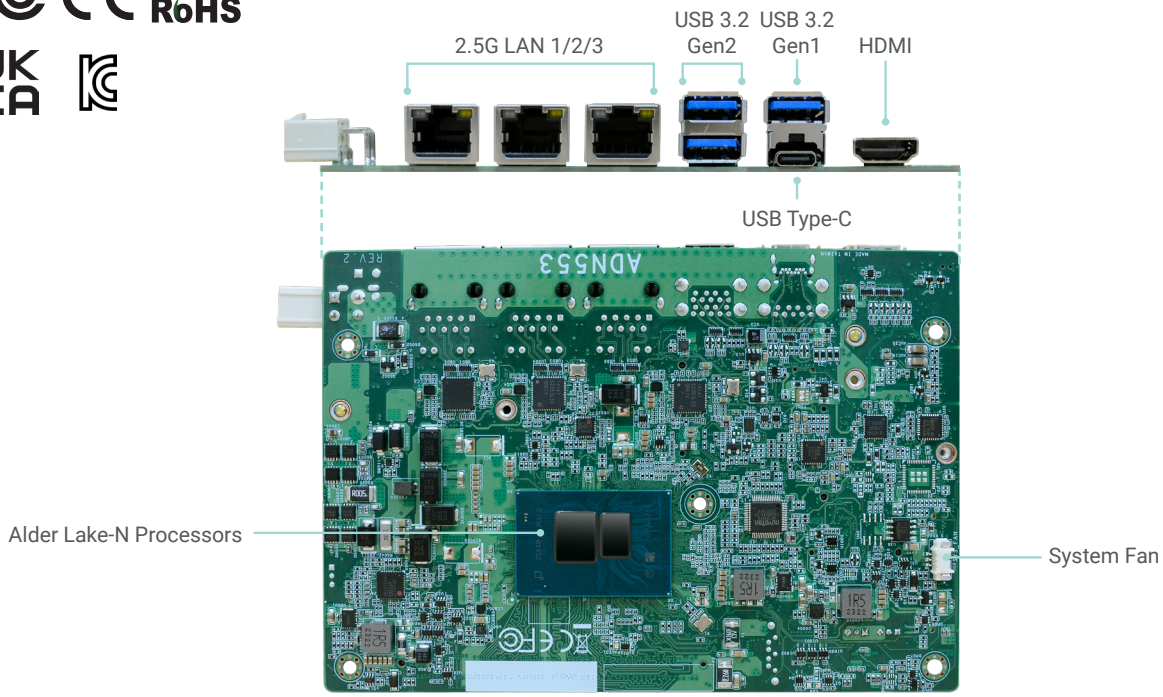

Bottom View

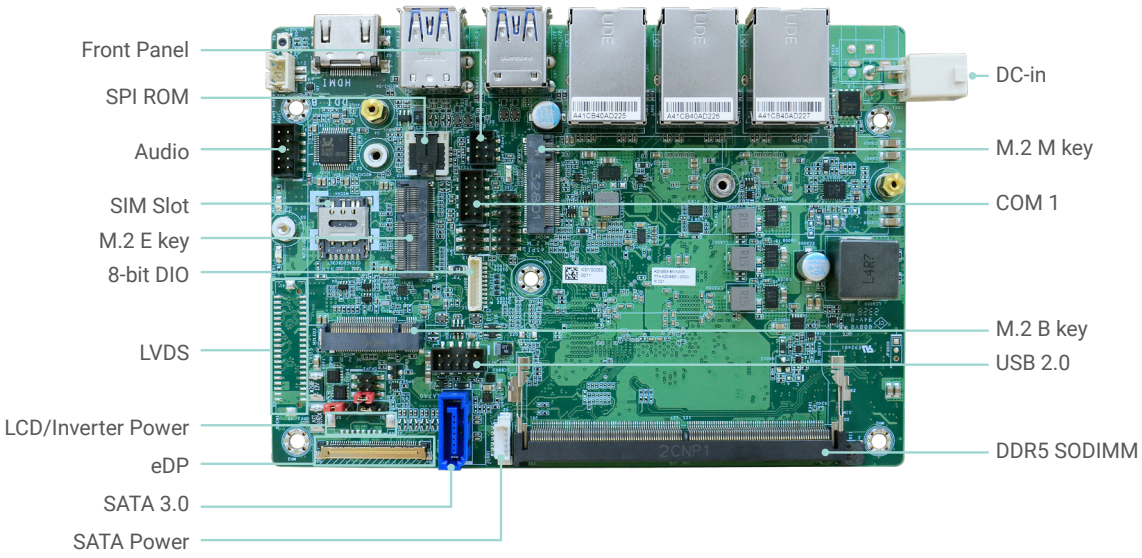

Top View

KEY FEATURES

DDR5

1 DDR5 SO-DIMM

4K High Resolution

Supports 4K/ 2K resolution

Triple Display

1 HDMI, 1 Type-C DP Alt. Mode, 1 LVDS/eDP

Rich I/O Connectivity

3 2.5GbE LAN,
4 USB 3.2, 2 USB 2.0,
1 SATA

Multiple Expansion

1 M.2 M Key,
1 M.2 B Key,
1 M.2 E Key

BLOCK DIAGRAM

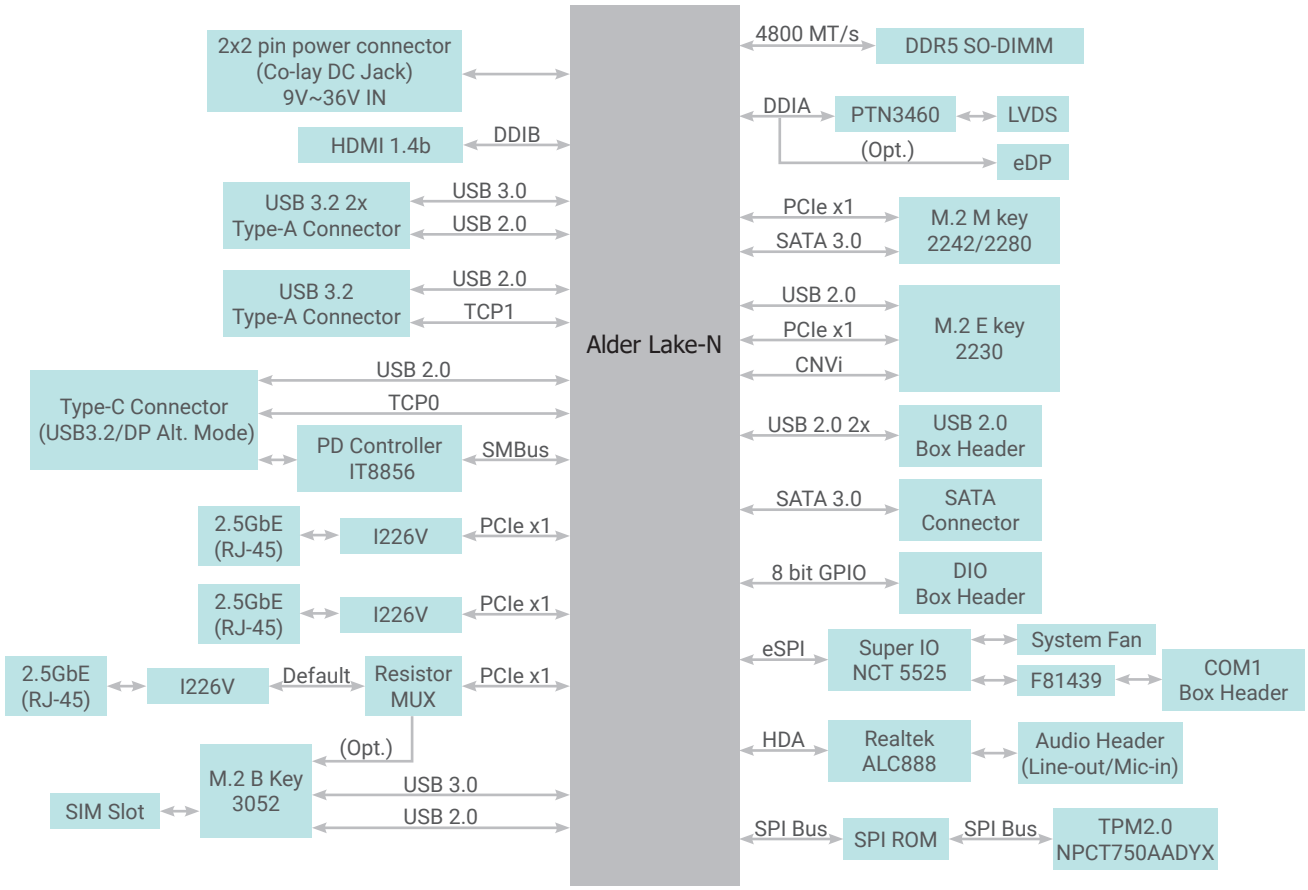

MECHANICAL DRAWING

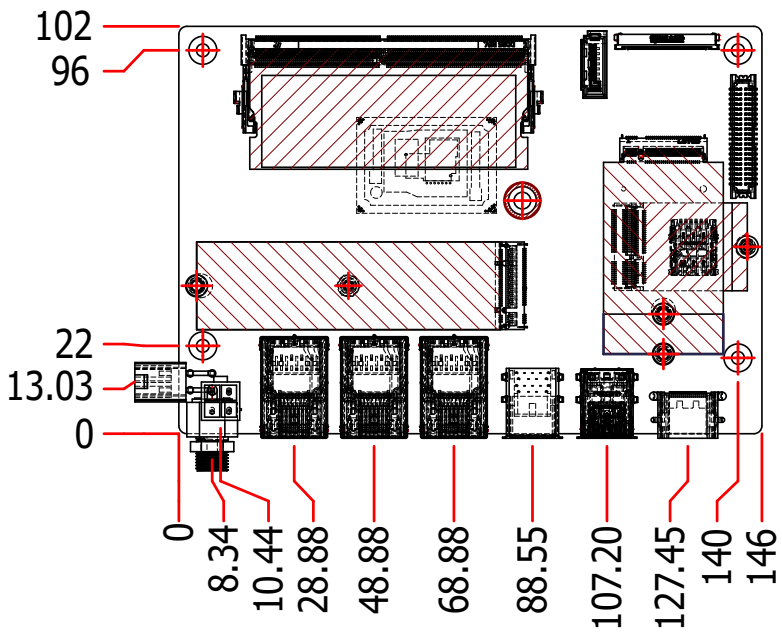

SPECIFICATION

SYSTEM	**Processor**	Intel® Atom® Alder Lake-N Processors, TDP up to 15W **Embedded** Intel Atom® x7425E, 4 cores, 6M Cache, up to 3.40 GHz, 12W Intel Atom® x7213E, 2 cores, 6M Cache, up to 3.20 GHz, 10W Intel Atom® x7211E, 2 cores, 6M Cache, up to 3.20 GHz, 6W **PC Client** Intel® Core™ i3-N305, 8 cores, 6M Cache, up to 3.80 GHz, 15W Intel® Processor N200, 4 cores, 6M Cache, up to 3.70 GHz, 6W Intel® Processor N97, 4 cores, 6M Cache, up to 3.60 GHz, 12W Intel® Processor N50, 2 cores, 6M Cache, up to 3.40 GHz, 6W
	Memory	One 262-pin SODIMM up to 16GB Single Channel DDR5 4800MHz
	BIOS	AMI SPI 256Mbit
GRAPHICS	**Controller**	Intel® UHD Graphics
	Feature	OpenGL 4.6, Direct X 12.1, OpenCL 3.0 **HW Decode:** HEVC, VP9, AV1, AVC **HW Encode:** HEVC, VP9, AVC
	Display	1 x HDMI 1 x Type-C DP Alt. Mode 1 x LVDS/eDP **HDMI:** resolution up to 4096x2160@24Hz **DP:** resolution up to 3840x2160 @60Hz **LVDS:** dual channel 24-bit, resolution up to 1920x1200@60Hz **eDP:** resolution up to 4096x2160 @60Hz
	Triple Display	HDMI + Type-C DP Alt. Mode + LVDS/eDP
EXPENSION	**Interface**	1 x M.2 M key 2280/2242 (PCIe Gen3 x1/SATA3.0) 1 x M.2 B key 3052/3042 (USB3.0/USB2.0, optional PCIe x1), 1 x SIM slot for 4G/5G 1 x M.2 E key 2230 (USB/PCIe x1, support CNVi)
AUDIO	**Audio Codec**	Realtek ALC888S
ETHERNET	**Controller**	3 x Intel® I226V(10/100/1000/2500Mbps). LAN3 option with M.2 3052 PCIe x1.
REAR I/O	**Ethernet**	3 x 2.5GbE (RJ-45)
	USB	4 x USB 3.2
	Display	1 x HDMI 1 x Type-C DP Alt. Mode
INTERNAL I/O	**Serial**	1 x RS-232/422/485 (2.0mm pitch)
	USB	2 x USB 2.0 (2.0mm pitch)
	Display	1 x LVDS LCD Panel Connector and 1 x LCD/Inverter Power or 1 x eDP Connector
	Audio	1 x Audio (Line-out/Mic-in)
	SATA	1 x SATA 3.0 (up to 6Gb/s) 1 x SATA Power
	DIO	1 x 8-bit DIO
WATCHDOG TIMER	**Output & Interval**	System Reset, Programmable via Software from 1 to 255 Seconds
SECURITY	**TPM**	dTPM2.0
POWER	**Type**	Wide Range 9~36V DC
	Connector	Right Angle Connector (4-pin) DC-in Jack (available upon request) Vertical Type Connector (4-pin) (available upon request)
	Consumption	**Typical:** i3-N305, 19V @ 0.45A (8.55W) **Max:** i3-N305, 19V @ 2.7A (51.3W)
	RTC Battery	CR2032 Coin Cell
OS SUPPORT	**OS Support (UEFI Only)**	Windows 10 IoT Enterprise (64-bit) Windows 11 Linux
ENVIRONMENT	**Temperature**	**Operating:** -5 to 65°C **Storage:** -40 to 85°C
	Humidity	**Operating:** 5 to 90% RH **Storage:** 5 to 90% RH
	MTBF	593,096 hrs @ 25°C; 398,330 hrs @ 45°C; 276,293 hrs @ 60°C **Calculation Model:** Telcordia Issue 4 **Environment:** GB, GC - Ground Benign, Controlled
MECHANISM	**Dimensions**	3.5" SBC Form Factor 146mm (5.75") x 102mm (4.02")
	Height	**PCB:** 1.6mm **Top Side:** 15.0mm **Bottom Side:** 4.0mm
STANDARDS AND CERTIFICATIONS	**Certifications**	CE, FCC Class B, RoHS, UKCA, KC

ORDERING INFORMATION

Model Name	P/N	Processor	Memory	Display	2.5 GbE	RS232/ 422/485	USB 3.2	USB 2.0	Power	Thermal	Temp.
ADN553-BN-x7425E	770-ADN5532-000G	Intel Atom® x7425E, 4C, 12W	1 DDR5 SODIMM	HDMI + Type-C DP Alt. Mode + LVDS	3	1	4	2	9~36 VDC	Fanless	-5~65°C
ADN553-BN-x7211E	770-ADN5532-100G	Intel Atom® x7211E, 2C, 6W		HDMI + Type-C DP Alt. Mode + eDP							
ADN553-BN-N305	770-ADN5532-200G	Intel® Core™ i3-N305, 8 cores, 15W		HDMI + Type-C DP Alt. Mode + eDP							
ADN553-BN-N200	770-ADN5532-300G	Intel® Processor N200, 4 cores, 6W		HDMI + Type-C DP Alt. Mode + LVDS							
ADN553-BN-N97	770-ADN5532-400G	Intel® Processor N97, 4C, 12W		HDMI + Type-C DP Alt. Mode + eDP							
ADN553-BN-N50	770-ADN5532-500G	Intel® Processor N50, 2 cores, 6W		HDMI + Type-C DP Alt. Mode + eDP							
ADN553-BN-x7213E	770-ADN5532-600G	Intel Atom® x7213E, 2C, 10W		HDMI + Type-C DP Alt. Mode + LVDS							

PACKING LIST

• 1 ADN553 board	
• 1 COM port cable(Length: 250mm, 1x COM port)	A81-015115-018G
• 1 SATA DATA/Power cable (Length : 300mm)	A81-002144-018G
• 1 Heat sink (Height: 29 mm)	A71-008353-000G

OPTIONAL ITEMS

• Power adapter (60W, 12V)	671-106012-000G
• USB 2.0 cable (Length: 200mm, 2 USB ports)	A81-001163-018G
• Front panel cable (Length: 250mm)	A81-009678-018G
• Audio cable (Length: 160mm)	A81-022007-016G
• Heat spreader (Height: 11mm)	A71-808356-000G
• 4-pin power to DC jack cable (Length: 100mm)	A81-004051-016G

DFI reserves the right to change the specifications at any time prior to the product's release. Changes thereafter will be based on the product's revision. Please contact your sales representative for the exact revision offered in your area. All product names mentioned are trademarks of their respective companies. © May 12, 2025 DFI Inc.