ECX700-AL

Intel Atom® Processor E3900 Series
Ruggedized Fanless Embedded System

KEY FEATURES

Ultra Rugged Design
IP67/ IP69K, comply with military criteria of vibration and shock test

Wide Temperature
Operating temperature: -40° to 70° C

Wide Voltage
Power range: 9~36V

On Board RAM/Storage
RAM: 4GB DDR3L Memory (Default)
Storage: 32GB/64GB eMMC (Default)

Wireless
Optional WiFi, LTE

FC CE RoHS

intel IoT Solutions Alliance

PANEL

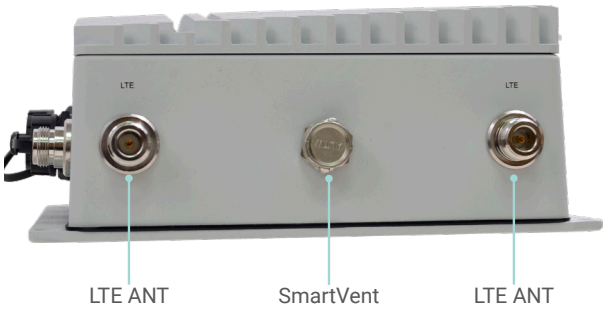

Top View

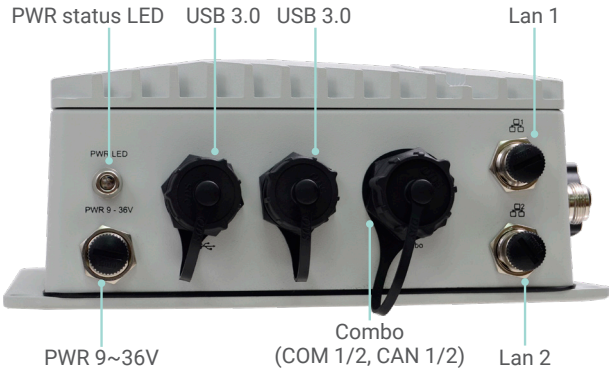

Bottom View

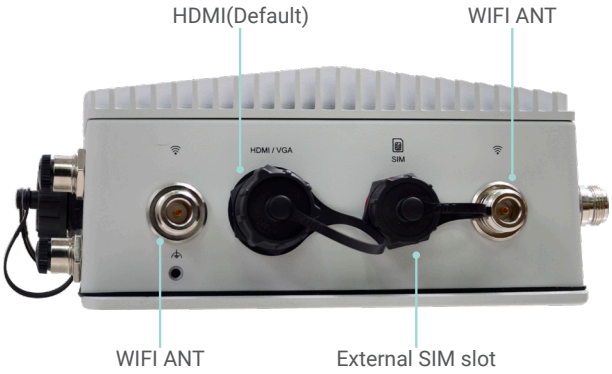

Right View

Stand View

DIMENSIONS

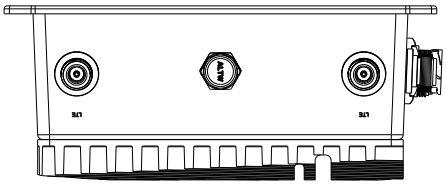

Top View

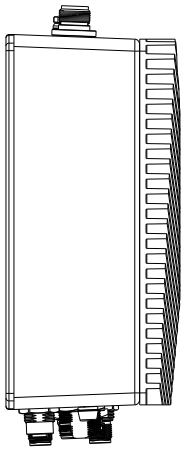

Left View

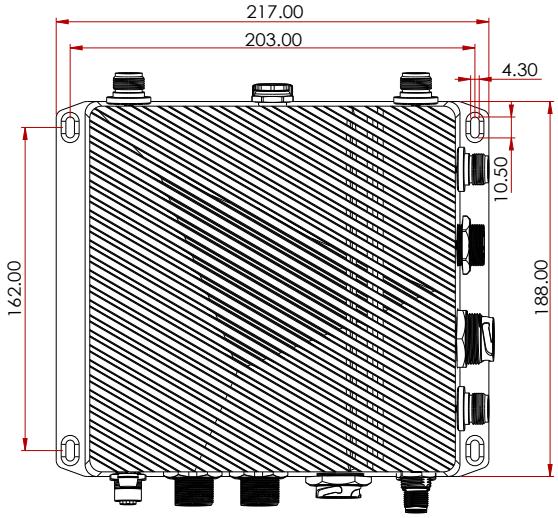

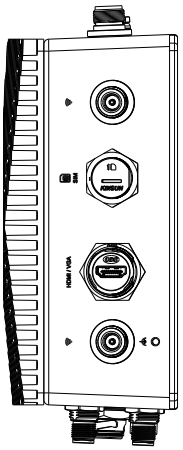

Right View

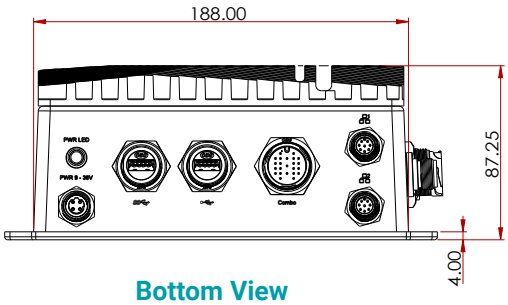

Bottom View

SPECIFICATION

SYSTEM	**Processor**	Intel Atom® Processor E3900 Series, BGA 1296 Intel Atom® x7-E3950 Processor, Quad Core, 2M Cache, 1.6GHz (2.0GHz), 12W Intel Atom® x5-E3940 Processor, Quad Core, 2M Cache, 1.6GHz (1.8GHz), 9.5W Intel Atom® x5-E3930 Processor, Dual Core, 2M Cache, 1.3GHz (1.8GHz), 6W
	Memory	4GB memory onboard (2GB/8GB by project support) DDR3L memory onboard + 1 SODIMM up to 8GB
	BIOS	AMI SPI 128Mbit (supports UEFI/Legacy mode and Security Boot (optional)
GRAPHICS	**Controller**	Intel® HD Graphics
	Feature	OpenGL 4.2, Direct X 11.1, OpenCL 1.2, OGL ES 3.0 **HW Decode:** H.264, MPEG2, VC1, VP8, H.265, MPEG4, MVC, VP9, WMV9, JPEG/MJPEG **HW Encode:** H.264, MPEG4, VP8, H.265, MVC
	Display	1 x HDMI **HDMI:** resolution up to 3840x2160@30Hz
STORAGE	**eMMC**	32GB/64GB Available(8GB/16GB by project support)
EXPANSION	**Interface**	1 x Full-size Mini PCIe for 4G LTE module 1 x Full-size Mini PCIe for Canbus 1 x M.2 2230 (USB2.0/PCIe) for WiFi module
ETHERNET	**Controller**	2 x Intel® I210AT PCIe (10/100/1000Mbps)
LED	**Indicators**	1 x Power Status LED
BOTTOM I/O	**USB**	2 x USB 3.0
	LAN	2 x GbE
	Combo	2 x RS232 and 2 x Can bus protocol
	Power	1 x 9~36V DC-IN
TOP I/O	**Antenna Hole**	2 x Antenna (LTE)
	Vent	1 x Vent
FRONT I/O	**Display**	1 x HDMI
	SIM slot	1 x SIM card slot
	Antenna Hole	2 x Antenna (WiFi)
WATCHDOG TIMER	**Output & Interval**	System Reset, Programmable via Software from 1 to 255 Seconds
POWER	**Type**	DC-in 9~36V
	Connector	M12 D-code
OS SUPPORT	**Microsoft**	Windows 10 IoT Enterprise 64-bit
	Linux	Linux
MECHANISM	**Mounting**	Wall mount
	Dimensions (W x H x D)	217 x 188 x 87 mm (with wall-mount bracket)
	Weight	4.5 kg
ENVIRONMENT	**Operating Temperature**	-40 to 70°C (E3950,E3940, E3930 only)
	Storage Temperature	-40 to 85°C
	Relative Humidity	5 to 95% RH (non-condensing)
STANDARDS AND CERTIFICATIONS	**Construction**	IP67/ IP69K enclosure
	Shock	**Operation shock test:** Half Sine Wave 15G, 11ms, 3 Shock Per Axis / MIL-STD-810G
	Vibration	**Operation Vibration test:** IEC 60068-2-64 / MIL-STD-810G
	Certifications	CE, FCC class A, ROHS

ORDERING INFORMATION

Model Name	Part Number	Processor	Memory down	eMMC	USB 3.0	USB 2.0	LAN	HDMI	2 COM + 2 CAN bus	WIFI + BT	LTE	External Cable list		
												IP67 M12 4pin DC cable L=100mm	IP67 COM+ CAN cable L=300mm	M12 Lan cable L=300mm
ECX700-AL	750-ECX700-100G	x7-E3950	4GB	64GB	1	1	2	1	Y	Y	Y	1	1	2
	750-ECX700-200G	x5-E3930		32GB	2	-	2		Y	-	-		1	2
	750-ECX700-300G	x5-E3930		32GB	1	-	2		-	Y	Y		-	2
	750-ECX700-400G	x5-E3940		64GB	2	-	2		-	Y	Y		-	2
	750-ECX700-500G	x7-E3950		64GB	1	1	-		Y	-	Y		1	-
	750-ECX700-600G	x7-E3950		64GB	1	1	-		Y	Y	-		1	-

OPTIONAL ITEMS

Optional Items	Part Number	Description
External USB cable	A81-001129-068G	IP67 USB Plug to USB Plug, 300mm
External HDMI cable	A81-026004-068G	IP67 HDMI Plug to HDMI Plug, 300mm
LTE IPEX cable	A81-099125-027G	ANTENNA CABLE, IPEX MHF4L to 前鎖式 N JACK IP67/8, L=220mm, Ø1.13, FOR ECX700-ASL, BTC061-20-MHF470B220(ARISTOTLE)RoHS *Note: Designed to resist corrosion under high temperature, humidity, and salt-spray exposure.
WiFi IPEX cable	A81-099124-027G	ANTENNA CABLE, IPEX MHF1 to 前鎖式 N JACK IP67/8, L=220mm, Ø1.13, FOR ECX700-ASL, BTC061-20-70B-220(ARISTOTLE)RoHS *Note: Designed to resist corrosion under high temperature, humidity, and salt-spray exposure.
WiFi / LTE Rod type Antenna	612-139917-000G	Omni-S Thimble IP68 LTE ANTENNA, 1710-7125MHz, REVISE N TYPE, L= 55mm,1399.17.0224 (HUBER+SUHNER) RoHS *Note: Designed for high vibration environments such as mining and construction vehicles.
WiFi Cabled type Antenna	612-RFA25T-100G	ANTENNA, 2400-2500MHz, 5150-5925MHz, REVISE N TYPE, L= 53mm, RFA-25-T288-41-1M-N (ARISTOTLE) RoHS *Note: Designed to resist corrosion under high temperature, humidity, and salt-spray exposure.
LTE Cabled type Antenna	612-RFALTE-200G	ANTENNA, 698-960MHz, 1710-2170MHz, 2300-2700MHz, REVISE N TYPE, L= 53mm, RFA-LTE-T288-41-1M-N (ARISTOTLE) RoHS *Note: Designed to resist corrosion under high temperature, humidity, and salt-spray exposure.

DFI reserves the right to change the specifications at any time prior to the product's release. Changes thereafter will be based on the product's revision. Please contact your sales representative for the exact revision offered in your area. All product names mentioned are trademarks of their respective companies. © November 27, 2025 DFI Inc.