1. Contents

1. Content----------2
2. Product BOM----------3
3. Product Photo----------4
4. Assembly Drawing----------5
5. Specification & Drawing----------6
- Heat Sink Assembly----------6
- Heat Sink----------8
- Fan Cover----------10
- Cu Pillar----------13
- Foot Rack----------15
- Screw----------19
- Spring----------22
- Washer----------24
- E-Ring----------27
- Fan Label ----------30
- Interface----------31
- Fan----------33
- Fan UL----------43
- Package----------52

6. CE/UL----------53
7. SGS----------56
8. 限用物質不使用聲明書----------90

2. Product BOM

NO	P/N	Name	Material	Unit	QTY
1	601007940-GP	HS Assembly	Al+CU+S50C	PCS	1
1.1	250015210-GP	Heat Sink	AL6063-T5	PCS	1
1.2	450006460-GP	Foot Rack	S50C	PCS	1
1.3	280001011-GP	Cu Pillar	CU 1100	PCS	1
2	200007180-GP	FAN	PBT 94V-0	PCS	1
3	150019050-GP	SCREW	AISI 1018	PCS	4
4	450005900-GP	SPRING	SWP	PCS	4
5	500001371-GP	WASHER	SPCC	PCS	4
6	300002012-GP	E-RING	SK5	PCS	4
7	520000220-GP	Grease	ShinEtsu 7783D	G	0.25
8	500000380-GP	DRIER	Silico	PCS	1
9	104020300-GP	TRAY	PET	PCS	1
10	104020310-GP	TRAY	PET	PCS	1
11	102002660-GP	GB BOX	300P Paper	PCS	1
12	360000850-GP	Foam	EPE	PCS	3/1
13	112000350-GP	PARTITION	B A3A	PCS	3/12
14	111000470-GP	CARTON	BC K=K	PCS	1/12
15	358020120-GP	LABEL		PCS	1
16	310007090-GP	COVER	PC	PCS	1
17	359001560-GP	FAN LABEL	24#消銀龍	PCS	1

3. Product Photo

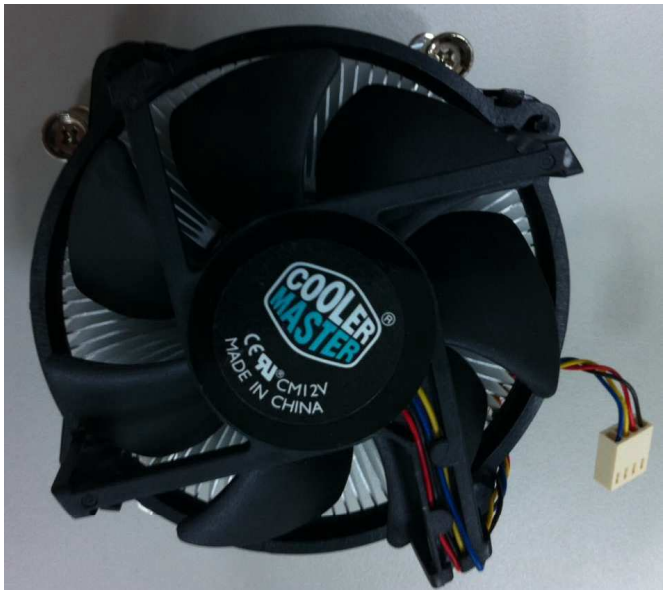

4.Assembly Drawing

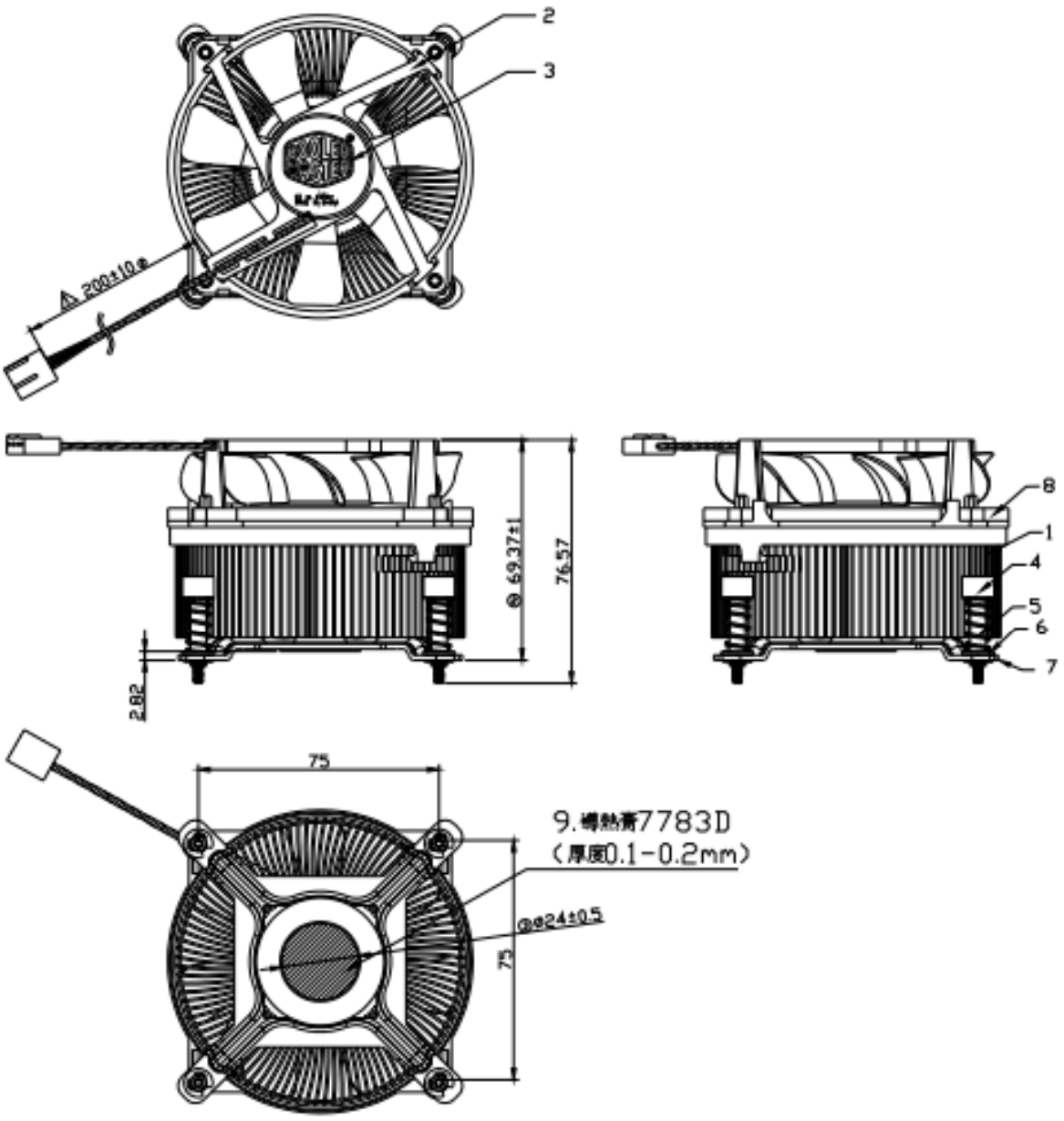

General Dimension Tolerances (Unit : mm)			
0	—	30	± 0.2
31	—	60	± 0.3
61	—	100	± 0.4
101	and	Over	± 0.5
Angles			± 2°

5. Specification & Drawing

Heat Sink Assembly

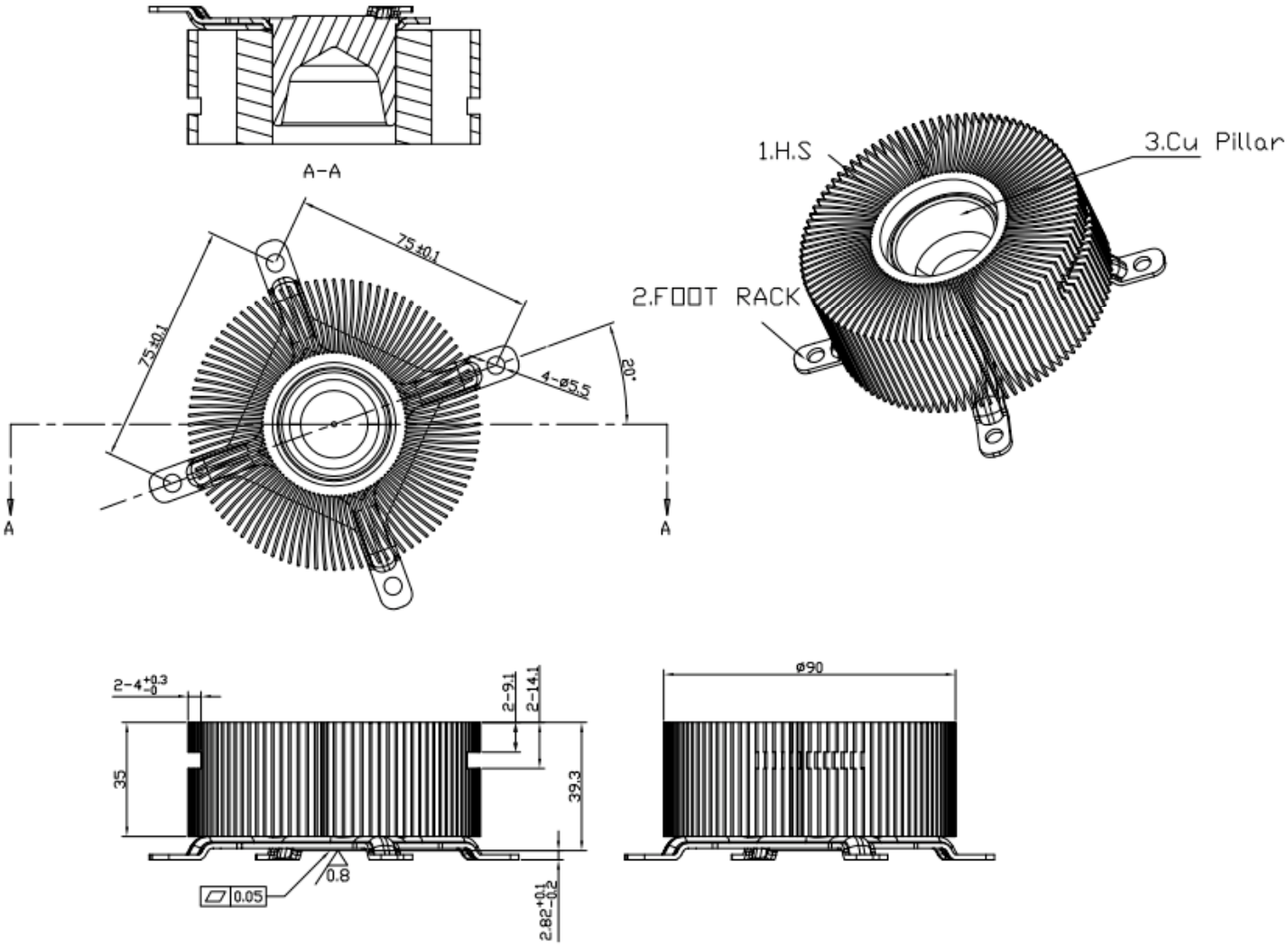

General Dimension Tolerances (Unit : mm)			
0	—	30	± 0.2
31	—	60	± 0.3
61	—	100	± 0.4
101	and	Over	± 0.5
Angles			± 2°

Heat Sink

Material : AL6063 T5

Finished:Chromate

Mechanical Characteristics :

Alloy No.	Tensile strength (kgf/mm^2)	Hardness test	Elongation (%)
Al6063 t5	27.23	68-75HV	31.12

Chemistry Ingredient Characteristics :

Value	Si	Fe	Cu	Mn	Cr	Mg	Zn	Ti
SPECIFIED VALUES	0.4258	02037	0.0032	0.0059	0.0028	0.5147	0.0000	0.00263

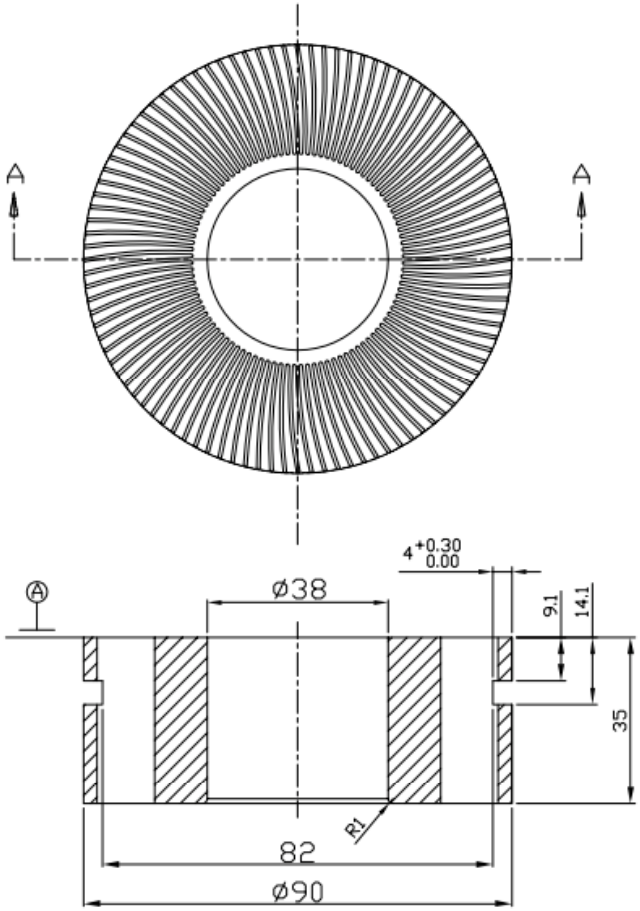

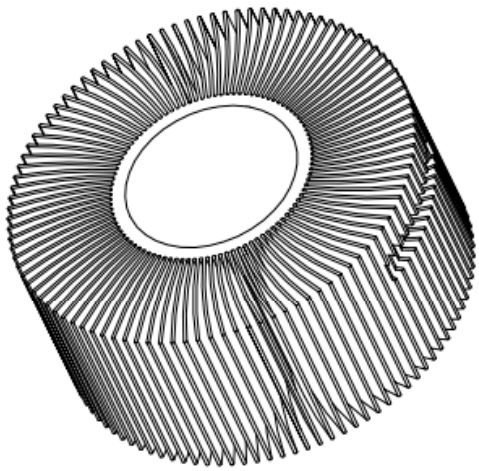

General Dimension Tolerances (Unit : mm)			
0	—	30	± 0.2
31	—	60	± 0.3
61	—	100	± 0.4
101	and	Over	± 0.5
Angles			± 2°

惠州广惠精密铝材有限公司

地 址: 广东省惠州市惠城区小金口镇九龙公路旁
电 话: 0752--2291350 2292846
传 真: 0752--2291351

时间	10:30	日期	2007年6月16日	样品名称	100004201-GP	Quality	
分 析 值							
AL	Si	Fe	Cu	Mn	Mg	Zn	Ti	Cr
98.70	0.397	0.107	0.0055	0.011	0.603	0.011	<0.0011	<0.0011
98.69	0.404	0.114	0.0055	0.011	0.597	0.011	<0.0011	<0.0011
98.70	0.398	0.107	0.0055	0.011	0.594	0.011	<0.0011	<0.0011
98.70	0.408	0.108	0.0055	0.011	0.605	0.011	<0.0011	<0.0011
Ni	Sn	Pb	Be	Ca	Sr	V	Zr	
<0.020	<0.050	<0.030	<0.0001	<0.0005	0.0007	0.013	<0.0030	
<0.020	<0.050	<0.030	<0.0001	<0.0005	0.0007	<0.0101	<0.0030	
<0.020	<0.050	<0.030	<0.0001	<0.0005	0.0007	0.0115	<0.0030	
<0.020	<0.050	<0.030	<0.0001	<0.0005	0.0006	0.0121	<0.0030	
平 均 值								
AL	Si	Fe	Cu	Mn	Mg	Zn	Ti	Cr
98.70	0.402	0.109	0.0055	0.011	0.600	0.011	<0.0011	<0.0011
Ni	Sn	Pb	Be	Ca	Sr	V	Zr	
<0.020	<0.050	<0.030	<0.0001	<0.0005	0.0007	<0.0122	<0.0030	

品管	核准	判定
王富川	殷先平	合格

材 質 証 明 書

茲証明本次入貨:

料　　號	100004201-GP	品　　名	铝挤型材
供　應　商	惠州广惠精密铝材有限公司	供 應 商 P/N	557367
進 貨 數 量	0.3m/支	所用之材質為	AL6063-T5
該原料供應係	中国铝业广西苹果铝业公司	提供之材料型號為	(UL.N/O): AL99.70铝锭
該原料供應係	青铜峡铝业股份有限公司	提供之材料型號為	(UL.N/O): AL99.70铝锭
該原料供應係	芮城垣发镁业有限公司	提供之材料型號為	(UL.N/O): 一级镁锭(99.5%)
該原料供應係	青铜峡铝业股份有限公司	提供之材料型號為	(UL.N/O): 102合金硅
使用次料之比例： 0			

若有變更冒替情事，本公司願負責及賠償貴號公司上述原因所造成之一切損失。

（為求慎重請蓋供應商之証明章於本文件）

特 此 証 明

惠州广惠精密铝材有限公司

供应商： 惠州广惠精密铝材有限公司

日　期： 2007-6-16

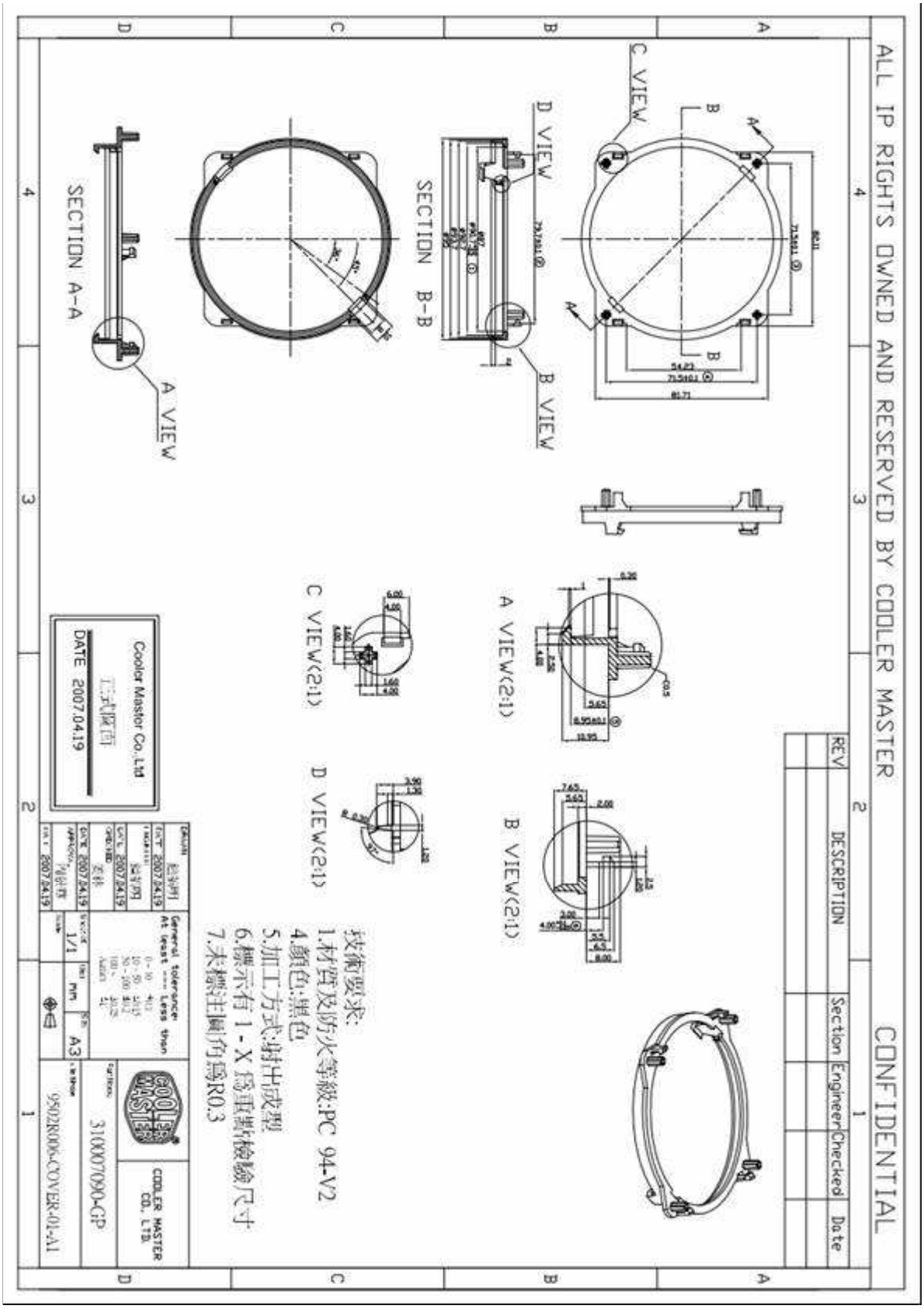
ALL IP RIGHTS OWNED AND RESERVED BY COOLER MASTER
CONFIDENTIAL
C VIEW
D VIEW
B VIEW
A VIEW
SECTION B-B
SECTION A-A
A VIEW(2:1)
B VIEW(2:1)
C VIEW(2:1)
D VIEW(2:1)
REV
DESCRIPTION
Section
Engineer
Checked
Date
技術要求:
1.材質及防火等級:PC 94-V2
4.顏色:黑色
5.加工方式:射出成型
6.標示有 1 - X 為重點檢驗尺寸
7.未標注圓角為R0.3
Cooler Master Co.,Ltd
DATE 2007.04.19
COOLER MASTER CO. LTD
310007090-GP
95021R006-COVER-01-A1
A3
1/1

Fan Cover

HAPPY STRAT INDUSTRIAL CO.,LTD

原料物性檢驗報告

COA

客戶	讯强	料號	PC		顏色	BK	日期	2009-8-12	
射出成型條件	射出					保壓		熔膠	
		一	二	三	四	一	二	一	二
	壓力	45	60	/	/	30	/	70	/
	速度	30	45	/	/	20	/	70	/
	位置	10	40	/	/	/	/	60	/
		射嘴		T1	T2	T3	T4	T5	T6
	設定℃	305		300	295	285	/	/	/
	實溫℃	303		300	295	284	/	/	/
	射出時間: 3	保壓時間: 1		熔膠時間: 6		冷卻時間: 6		周期時間: 14.2	
檢驗結果	制品顏色	BK				含 纖 量		無纖	
	異 味	/				沖擊強度		6.9	
	麻 點	/				韌 性		B	
	花 紋	/				流 動 性		18g/mm	
	浮 纖	A				防 火 度		V2	
	熔 點	280℃				收 縮 率		0.15%	
成型備注	成份爲:聚碳酸脂: 99%, 黑色母2014# :1%								

For and on behalf of HAPPY START INDUSTRIAL CO., LTD.

復核: HOWARDLIANG 審核: ALICE 品管: LILY Authorized Signature(s)

TEIJIN
帝人聚碳酸酯有限公司
TEIJIN POLYCARBONATE CHINA LTD.
浙江省嘉兴乍浦开发区滨山西路888号
邮编：314201
电话：86-573-8558-3026　传真：86-573-8558-3340

TEIJIN P/O NO:

材 质 证 明 书

I. 帝人聚碳酸酯有限公司品质标准值
II. 测试结果

型号	批号	分子量		色相（b值）	
		I	II	I	II
LV-2250Y	U4F08203	23.7±0.7	合格	-2.5±1.0	合格

帝人聚碳酸酯有限公司
TEIJIN POLYCARBONATE CHINA LTD.

For and on behalf of
HAPPY START INDUSTRIAL CO., LTD.

Authorized Signature(s)

LOGISTICS MANAGER

帝人广州
2011.4.15
MAGGIE

Cu Pillar

Material: C1100

Surface Finishing: Anti-Oxidation

Mechanical Characteristics:

Alloy No.	Tensile strength	Hardness test	Elongation
C 1100	26.29 (kgf/mm^2)	88 HV	98.0 %

Chemistry Ingredient Characteristics:

Value	Cu	Pd	Fe	Sn	Zn	P
SPECIFIED VALUES	99.90	0	0	0	REN	0

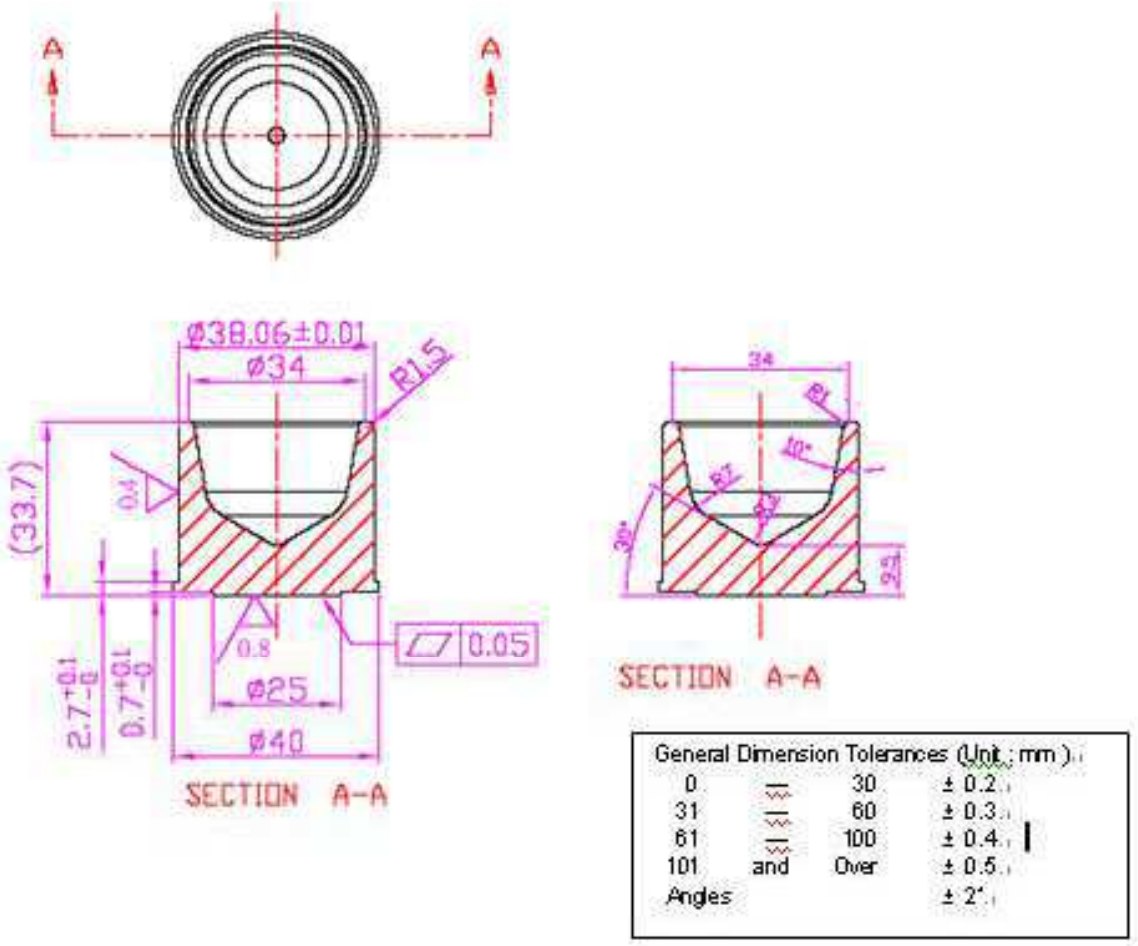

材質證明報告

名　　稱 Cu

材　　質 C1100

主要成份 Cu99.95

其他成份:

Ag	Sb	Bi	Fe	Ni	Pb	Sn	S	P	Zn	Total
0.015	0.001	0.005	0.004	0.012	0.003	0.002	0.004	0.001	0.003	0.05

測量工具 光譜分析儀;導電儀

香港經銓銅業有限公司

2006 年 04 月 25 日

Foot Rack

Material : S50C ; Finished: Nickel-Plating

Mechanical Characteristics :

Alloy No.	Tensile strength (26-32kgf/mm^2)	Hardness test (80~100HV)	Elongation (%)
S50C	**26.29**	**88**	**98%**

Chemistry Ingredient Characteristics :

Value	C	Si	Mn	P	S
SPECIFIED VALUES	0.52	0.21	0.72	0.015	0.004

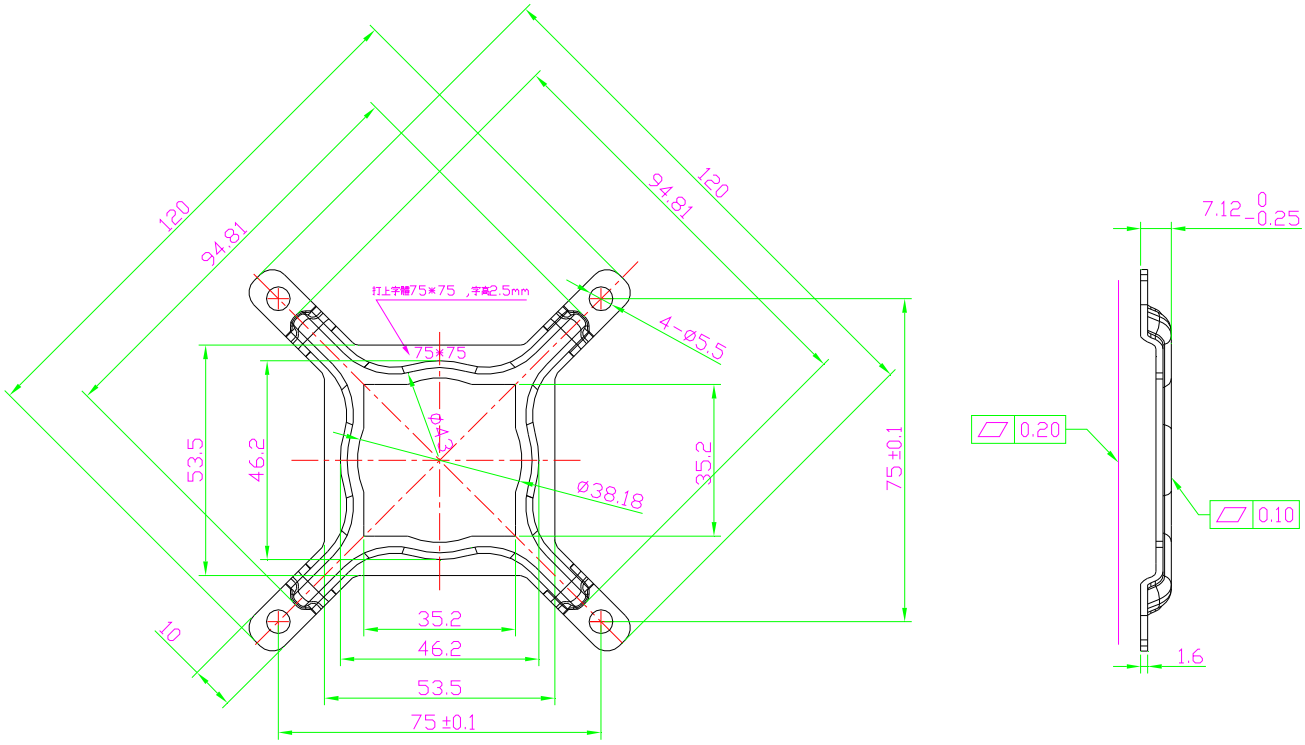

General Dimension Tolerances (Unit : mm)			
0	—	30	± 0.2
31	—	60	± 0.3
61	—	100	± 0.4
101	and	Over	± 0.5
Angles			± 2°

材 質 證 明 書

MATERIAL CERTIFICATE

廣東高要英市壩頭鎮石澤市工業區
TEL：86-759-87928390 FAX：86-769-7901980

灿煜金属制品有限公司
CAN YU METAL PRODUCTS CO. LTD

客户名称	全佳录	生产编号 Customer No	20090318002	制定日期 Issue Date	2009-3-18	质保证编号 Cer. Reate No	20090318002
材料名称	S50C	订单编号 Order No		依据规格 By Standard	JIS		

序号 Item	材料编号 Code No	厚度 (MM) Thickness	宽度 (MM) Width	长度 (MM) Length	数量 Quantity	重量 (KG) Weight	表面处理 Surface Finish
1		1.2		COIL	C		
2		1.6		COIL	C		
3				COIL			
4				COIL			
5				COIL			
6				COIL			

规格 Spec	化学 (Chemical Analysis Wt.%)									
	C	Si	Mn	P	S	Ni	Cr	Mo	Pb	
要求 Item	0.47 0.53	0.15 0.30	0.60 0.90	0.030 max.	0.035 max.					
1	0.49	0.22	0.76	0.026	0.021					
2	0.50	0.24	0.80	0.024	0.023					
3										
4										
5										
6										

规格 Spec	硬度 Hardness	屈伏强度 (Mpa) Yield stress	抗拉强度 (Mpa) Tensile Stress	伸长率 (%) Elongation	弯曲试验 Bend Test
试片编号 Specimen	HV	min	min	min	test
20090318002	157				OK
	162				OK

INSPECTION CERTIFICATE

Nippon Steel Corporation
HEAD OFFICE: 6-3, OTEMACHI 2-CHOME, CHIYODA-KU, TOKYO 100, JAPAN
MURORAN WORKS: 12, NAKAMACHI, MURORANCITY HOKKAIDO 050, JAPAN

REFERENCE No. TEX -8224
SHIPPER TONAN TRADING CO., LTD.
CONTRACT No. 7-831-E2-5-3-7M05-05
COMMODITY HOT ROLLED STEEL WIRE RODS, COLD HEADING QUALITY
SPECIFICATION AISI12L14
CUSTOMER SHENZHEN FASTEN ZHANG YUAN METALWORK CO.,LTD
CUSTOMER'S CONTROL No.

CERTIFICATE No. EE07800404 PAGE 1
DATE OF ISSUE 2007-03-19

SIZE (MM)	NUMBER OF PRODUCT	MASS KG	CAST No.	TENSILE TEST GL= YP or YS	TS	EL %	BEND TEST	CHEMICAL COMPOSITION % C X100	Si X100	Mn X100	P X1000	S X1000	Pb X100
7.5	50	105.710	7A0942					7	1	110	64	315	25
7.5	65	135.214	7B1526					7	1	109	63	324	26
7.5	41	86.495	7B1786					7	1	110	65	320	25
7.5	125	259.260	7B1787					7	1	108	58	328	25
7.5	48	96.647	7B1788					7	1	112	64	303	25
GRAND TOTAL	329	683.326											

REMARKS:

(NOTES)
YS : Yield Strength
UE : Uniform Elongation
YR : Yield Ratio
RBT : Rebend Test
AGS : Austenitic Grain Size Test
FGS : Ferritic Grain Size Test
MAS : Macrostructure Examination
MIS : Microscopic Examination
SPT : Sulphur Print Test
SFT : Macro Streak Flaw Test
JT : Jominy End Quenching Hardenability Test
DI : Di(Ideal Critical Diameter)Value

(G.GOOD)
HBW : Brinell Hardness
HV : Vickers Hardness
HRA : Rockwell Hardness A Scale
HRBS : " " B "
HRC : " " C "
HS : Shore Hardness
DEQ : Decarburized Depth Measuring Test
DM-T : Total Decarburized Depth
DM-F : Ferrite Decarburized Depth
DM-S : Decarburized Depth Specified by Residual Carbon Ratio
DM-P : Practical Decarburized Depth

CIT. : Charpy Impact Test
SF : Shear Fracture
BF : Brittle Fracture
VALUE : Impact Value
LE : Lateral Expansion
UT : Ultrasonic Test
NMI : Non-Metallic Inclusion Test

KMSC : kg/mm²
KFMSC : kgf-m/cm²
JOLSC : J/cm²
N-MSM : N/mm²

S-AL : Sol Al
CEQ : Carbon Equivalent
TE : Total Elements
P : Product Analysis

L-TON : Long Ton
S-TON : Short Ton

We hereby certify that the material described herein has been made in accordance with the rules of the contract.

Y. Shimba
GROUP MANAGER
MURORAN WORKS

中山新亚洲胶粘制品有限公司
ZHONG SHAN NEW ASIA ADHESIVE-PRODUCT CO.,LTD

品名 ARTICLE NAME	D022C	英文名称 ENGLISH NAME	D022C
产品结构 PRODUCTION CONSTRUCTION	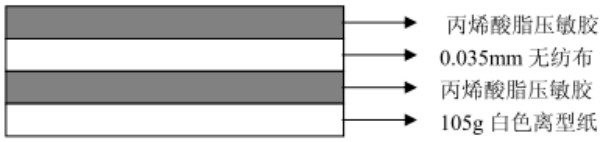		

基材 SUBSTRATE			底纸 LINER		
材料名称 ARTICLE NAME	无纺布		材料名称 ARTICE NAME	——	105g 白色离型纸
厚度（mm） THCKNESS	0.035mm±0.003mm		厚度（mm） THCKNESS	——	0.110mm±0.005mm
基重（g/m²） BASIC WEIGHT	14 g/m²±5 g/m²		基重（g/m²） BASIC WEIGHT	——	105 g/m²±5 g/m²
颜色 COLOR	白色		颜色 COLOR	——	白色
平滑度 SMOOTHNESS	GOOD		平滑度 SMOOTHNESS	——	GOOD
印刷性 PRINT ABILITY	——		斩性 DIE CUTTING	——	OK
粘性 PRESSURE SENSITIVE ADHESIVE					
胶系 ADHESIVE	丙烯酸酯压敏胶	丙烯酸酯压敏胶	剥离力 RELEASE FORCE	≥13N	≥13N
上胶厚度 THICKNESS	35μm±5μm	35μm±5μm	保持力 （hr/kg*25mm） HOLDING POWER	＞1hrs	＞1hrs
上胶量 DRY COATING WEIGHT	80g/m²±10 g/m²	80g/m²±10 g/m²	耐候性 WERTHER RESISTANCE	GOOD	GOOD
加热量（wt%） SOVLENT RETENTION	80%±5%	80%±5%	适用温度（℃） TEMPRATURE RANGE	-30℃～60℃	-30℃～60℃
初期力 （NO/BALL） INITIAL TACK	≥10	≥10	耐溶剂 SOLVENT RESISTANCE	——	——
粘着力（kg/25mm） 180° PELL ADHESIVE	1kg	1kg	总厚 Total Thickness	100μ ±5μ	100μ ±5μ

说明：以上数值为本司 D022C 产品性能标准。

Screw

Material: AISI 1018
Finished: Nickel-Plated
Chemistry Ingredient Characteristics: (%)

Value	C	Mn	P	S
SPECIFIED VALUES (%)	0.1	0.3~0.5	≤0.030	≤0.050

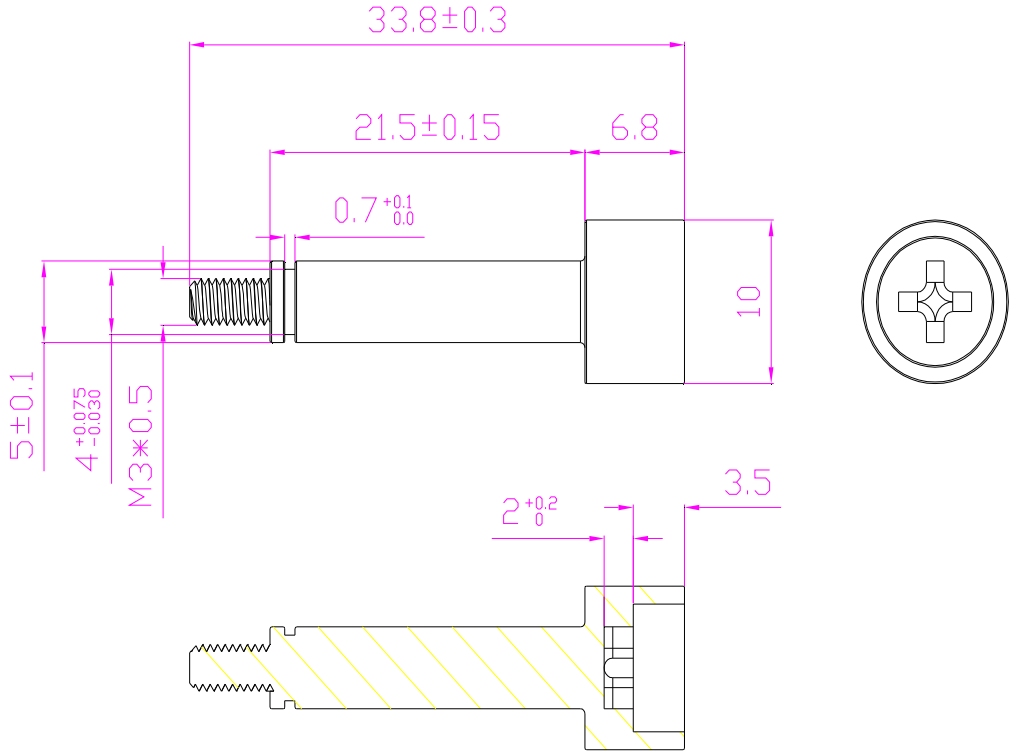

General Dimension Tolerances (Unit : mm)			
0	—	30	± 0.2
31	—	60	± 0.3
61	—	100	± 0.4
101	and	Over	± 0.5
Angles			± 2°

東莞全成五金有限公司
DONG GUAN QUAN CHENG METAL CO., LTD.

鹽水噴霧試驗報告

實驗設備:HY- -952鹽水噴霧實驗機　　實驗方法:中性鹽霧

實驗條件

實驗項目	設定	實際實驗記錄
鹽水濃度	5%NACI	并全
實驗室溫度	35%℃±1℃	〃
飽和空氣溫度	47%℃±1℃	〃
實驗室相對溫度	85%以上	〃
壓縮空氣壓力	1±0.1kg/cm²	〃

各類電鍍產品測試基本參數

表面處理	藍鋅	白鋅	彩鋅	黑鋅	日本黑鋅	鎳	銅底鎳
驗收標準	4H	4H	48H	24H	48H	2H	4H
表面處理	黑鎳	青銅	鹽水鎳	三價鉻彩鋅	三價鉻藍鋅	無鉻黑鋅	SUS清洗
驗收標準	4H	4H	24H	16H	6H	12H	24H

注:客戶有特殊要求時依客戶要求爲標準需另外注明

客戶	品名規格	表面處理	計時器 開始時間	計時器 結束時間	測試時間 (H)	氧化面積 (%)	判定	來料日期
研發	2+1113-1015X27	鎳	15:41	16:41	1H	無氧化	合	2/14
			16:41	17:41	2H	〃	〃	
			17:41	18:41	3H	〃	〃	
			18:41	19:41	4H	〃	〃	

保存期限:一年

試驗員:

審核:

中國鋼鐵 CHINASTEEL

品質證明書
TEST CERTIFICATE
(電子參考版)

中國鋼鐵股份有限公司
CHINA STEEL CORPORATION
中華民國高雄市小港區中鋼路1號
1 CHUNG KANG ROAD HSIAO KANG, KAOHSIUNG(812)
TAIWAN, REPUBLIC OF CHINA,
TEL: (07)802-1111 FAX: (07)802-2511,(07)803-9427

B0310-01 1104

客戶名稱 SOLD TO	強新工業股份有限公司 NEW BEST WIRE INDUSTRIAL CO., LTD.	產品名稱 PRODUCT	ROD-CARBON STEEL
		發票號碼 INVOICE NO.	ZW73303024
		證明書編號 CERTIFICATE NO.	97062580310
規格名稱 SPEC.	SAE 1018 MODIFIED C:.17/.19,MN:.70/.90, AL-KILLED (HCWQ1)	客戶編號 CUSTOMER NO.	84703335
		中鋼訂單編號 CSC ORDER NO.	DW7781W
		交運日期 SHIPPING DATE	JUN. 24, 2008
		證明書日期 T/C ISSUE DATE	JUN. 25, 2008
檢驗 INSP.	CSC MILL INSPECTION T/C 01	客戶訂單編號 CUST. ORDER NO.	

項目 ITEM NO	產品序號 SEQ. NO.	尺寸 MATERIAL DESCRIPTION 直徑/厚度 DIA/THICK MM	寬度 WIDTH	長度 LENGTH MM	數量 QTY	質量 MASS KGS	爐號 HEAT NO.	化學成分 CHEMICAL ANALYSIS % C	Mn	P	S	Si	Cu	Ni	Cr	Mo	T. Al	備註 REMARKS
								2 X10	2 X10	3 X10			2 X10				3 X10	
016	D6498 01	5.50		C011	27	40,571	1K672	18	82	14	9	6					49	
017	D6499 01	5.50		C011	34	51,316	1K672	"	"	"	"	"					"	
018	D6499 01	5.50		C011	19	28,630	1K672	"	"	"	"	"					"	
			TOTAL:		80	120,519												

註釋 NOTES

SURVEYOR TO

茲證明本表所列產品，均依材料規格製造及試驗，並符合規格之要求。
WE HEREBY CERTIFY THAT MATERIAL DESCRIBED HEREIN HAS BEEN MANUFACTURED AND TESTED WITH SATISFACTORY RESULTS IN ACCORDANCE WITH THE REQUIREMENT OF THE ABOVE MATERIAL SPECIFICATION.

Lin Wei
冶金技術處處長
GENERAL MANAGER, METALLURGICAL DEPARTMENT

Spring

Mechanical Characteristics:

Specification	Size	Spring Constant
SWP	1.2mm	1390gf/mm

Finished: Nickel-Plated

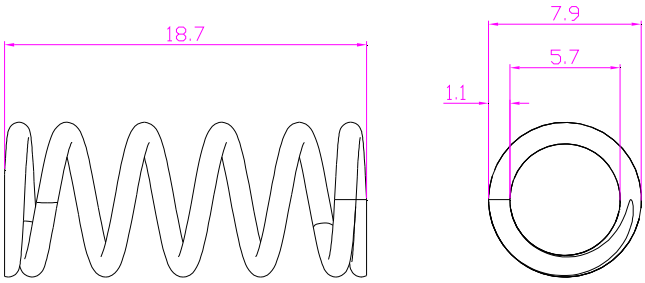

General Dimension Tolerances (Unit : mm)

0	—	30	± 0.2
31	—	60	± 0.3
61	—	100	± 0.4
101	and	Over	± 0.5
Angles			± 2°

Fudi 惠州市富的旺旺发展有限公司
广东省惠州市仲恺高新技术开发区惠台工业区
电话：2620633，5860383 传真：2622933 E-mail：Fudi@vip.163.com

盐雾试验报告

试验日期： 2009 年 03 月17 日

客户名称	F059	料号/规格/品名	450005900-GP		
材料	SWPB ϕ1.2	表面处理	镀镍		
批次号码	样板料	批量	50PCS	样品数量	5PCS
批次号码		批量		样品数量	
批次号码		批量		样品数量	
试验时间： 3 月17 日8 时20分到 3月17日16 时20 分				共计：8 时 0分	

序号	测试项目	标准设定	测试记录
1	测试溶液浓度	(5±0.1) %	5%
2	盐水溶液PH值	6.5-7.2	6.9
3	喷雾量	1.0-2.0ml/80cm²/h	1Ml/80cm²/h
4	空气压力	1.00±0.01kgf/cm²	1kgf/cm²
5	实验室相对湿度	85%以上	90%
6	压力桶温度	47° C±1° C	47° C
7	盐水温度	35° C±1° C	35° C
8	样品放置角度	①、自由悬挂 ②、倾斜15° -30°	②

判断标准：测试后，用清水洗去表面附着物，腐蚀面积<0.25%为合格，试样表面必须色泽均匀，无氧化锈腐现象。

样品测试后状况：

无氧化生锈的现象

惠州市富的旺旺实业发展有限公司 工程部 2009.3.17 确认章

PASSED

最终判断 ☑允许 ☐ 拒收

审核 叶美花 测试员 曾月英

FD-08-01

Washer

Material : SPCC

Surface treatment : Zinc-plating

Chemistry Ingredient Characteristics :(%)

Value	C	Mn	P	S	Si
SPECIFIED VALUES	0.15	0.6	0.1	0.05	/

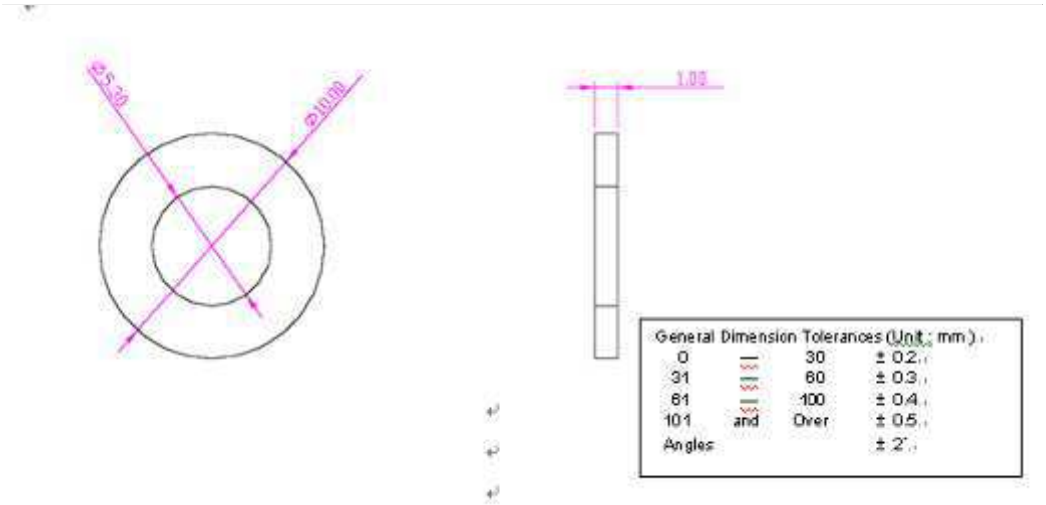

盛泰五金塑胶制品有限公司

盐雾测试记录表

TO: 讯强公司　　FM: 盛泰　　Date: 2007-7-4

型号：T=1.0mm	测试编号：ST-070704-0001	制作人：吴娜	批核人：李业俊
标准：要求 8H 不生锈	测试部门：FQA	测试结果：√合　格　□不 合 格	
产品名称：华司垫片	产品料号：	材质：铁片	表面处理：镀蓝锌

试验时间：　2007 年 7 月 3 日 8:00 始
2007 年 7 月 3 日 16:00 止　共计 8 小时连续喷雾试验

试验操作	1、试验运行状况	正常
	2、试验室温度（℃）	35±1
	3、饱和空气桶温度（℃）	47±1
	4、压缩空气压力（Kg/cm²）	1.0±0.01
	5、盐水溶液：	NSS
	盐水溶液的品质	5%NaC1 溶液
	盐水溶液的 PH 值	6.5-7.2
	盐水溶液的比重	1.030g/cm²
	6、盐雾收集量（左/右）	6m1
	7、试样放置角度	Sampies 水平放置于物架上

时间 \ 状况 \ S/N		1#	2#	3#	4#	5#
		S/N	S/N	S/N	S/N	S/N
1	9:00	OK	OK	OK	OK	OK
2	10:00	OK	OK	OK	OK	OK
3	11:00	OK	OK	OK	OK	OK
4	12:00	OK	OK	OK	OK	OK
5	13:00	OK	OK	OK	OK	OK
6	14:00	OK	OK	OK	OK	OK
7	15:00	OK	OK	OK	OK	OK
8	16:00	OK	OK	OK	OK	OK
9						
10						
11						
12						

说明：1、经清水冲洗后，直接可视面，表面不可有生锈；
2、切口、内侧允许出现轻微黄斑，数量为≤6 个；
3、将产品放在自然温度 23±2℃，相对湿度为 60±20%，空气中循环不受阻直射干燥后允许 6-10 个锈点，面积为 0.5mm，判定 OK

备注：经以上测试结果依标准判定"合格"

编号：QC-3-052A

INSPECTION CERTIFICA
ใบรับรองคุณภาพสินค้า

Thai Cold Rolled Steel Sheet Public CO.. Ltd
Head office :23/1Prapawit Blag. Sth floor Suntsak road.
Sitom.Brangrak.Bangkok 10500 thailan
Tel.(662)630-0300 Fax.(662)630-0321
Plant office :111 moo 4 Maeramphueng Distrct.
Bangsaph an.Prachuabkbirikhan
77140.Thailand
Tel.(032)548-375-31 Fax.(032)-548-382-3

Customer : WAH LUEN STEPL (H.K.) LJMJJED

Purchaser : [redacted]

Reference No : TCR/WAH-12

Commodity : COLD REDUCED CARBON STEEL COIL

Specification : SPCC-SD-OILED

Size : 2.00 X 1219 X COLL

Certificate No : 09385
Page : 01 of 01
Date : 04/03/2009
Contract No : C03YB03-010

Coil No.	Quantity	Mass(Ton)	Chemical Coposrtion[x] C	Si	Mn	P	S	S-AL	Cr	N	Tensile Test YP	TS	EL	HRB	Heat Nu
			X1000		X100			X1000		X100	X1000	N/sq.mm	[x]		
92974	3	21.130	40	1	25	9	6				170	310	48	38	
92975	3	31.140	40	1	25	9	6				166	306	49	37	
92976	3	20.680	40	1	25	9	6				168	308	48	38	
92977	3	21.240	40	1	25	9	6				169	308	47	37	
TOTAL =	12	84.190													

We hereDy certiry that the matena descnbed herem has been tested and inspected satistactory results in accordance with the above specification.

Signature

Y.Boba

Manager of Technical and Quality Control. Department

E-Ring

Material : SK5
Surface Treatment：Nickel Plating

Mechanical Characteristics:

Specification	Hardness(HRC)	Hardness(HB)
SK5	45-50	201 max

Chemistry Ingredient Characteristics:

Value	C	Si	Mn	Cr	Ni
SPECIFIED VALUES	0.9-1.00	0.35 max	0.50 max	0.3 max	0.25 max

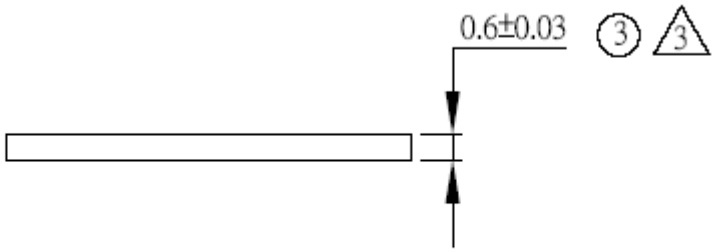

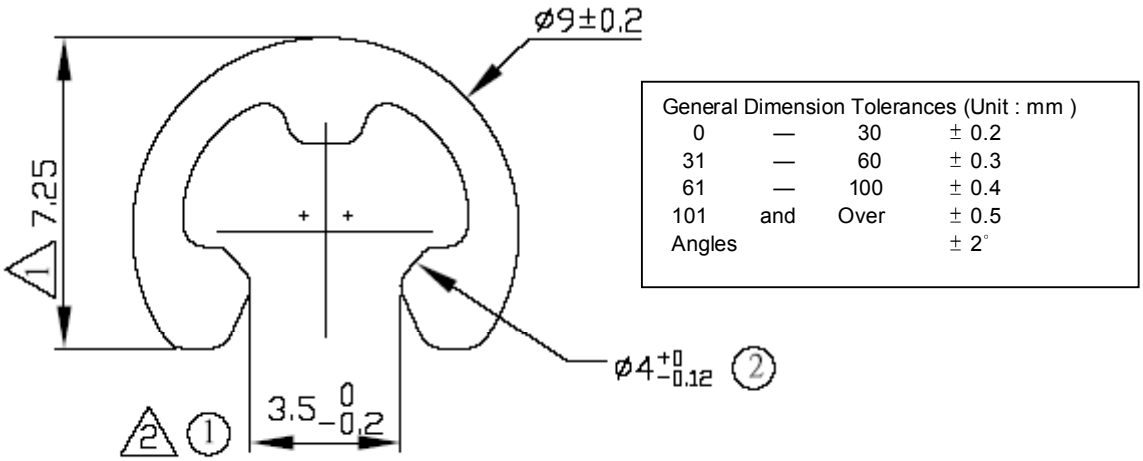

Cooler Master Co., Ltd.
www.coolermaster.com

可靠度實驗報告

區域:訊強

鹽霧測試報告	承認	檢認	作成
	周茂森	秦道軍	簡東風
目的:測試C型扣的抗氧化處理結果,以防日後氧化生銹.	訊強品保 2008 年 08 月 06 日		
要求:測試2H不可有腐蝕現象,每1小時觀察一次.	產品料號:300002012-GP(永強)		

測試物件圖:

實驗目的: 測試產品的抗氧化處理結果,以防在運輸及庫存當中產品氧化生銹.

實驗條件: 5%的分析純氯化鈉,工作室溫度為35度,飽和器溫度為47度,采用連續噴霧.

實驗步驟:

1. 配置5%的分析純氯化鈉.
2. 調節鹽霧實驗機參數,把產品傾斜放在鹽霧實驗機擱杆上.
3. 開始實驗,經過2H時C型扣無腐蝕現象,如圖所示:

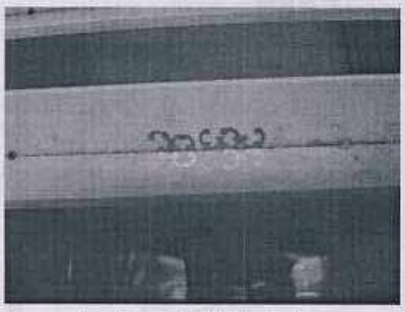

圖為產品測試時圖片

圖為產品測試1H時无腐蝕圖

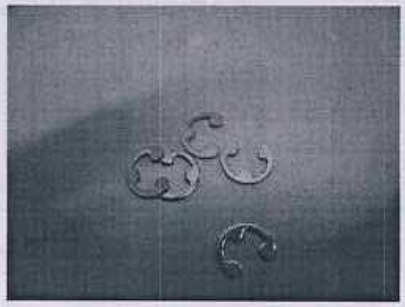

圖為產品測試2H時无腐蝕圖

CM-QW-HQ-003- R12 V1.1

材 质 证 明 书

MATERIAL CERTIFICATE

证明书号：0905036-1
Certificate No.
Order No.

东莞市嘉富金属材料有限公司
Date: 2009-05-08

项 目 Item No	钢种名称 Type	规 格（MM） Size	数 量 Quantity	重量（KG） Weight	表面等级 Finish	硬 度（HV） Hardness	钢卷编号 Coil No.	依据规范 By Standard
1	SK5	0.6			SB	150	081220-1905	JIS
2	以下空白							
3								
4								
5								

化 学 成 份（%） Chemical									物 理 试 验 Mechanical Test		
	C	Si	Mn	P	S	Cr	Ni	Cu	抗拉强度（N/mm²） Tensile Strength	降伏强度（N/mm²） Yield Stress	伸长率（%） Elongation
项目 Item No.	0.80 0.90	0.35 max	0.50 max	0.030 max	0.030 Max	0.065 Max	0.05 Max	0.25 Max			
1	0.88	0.32	0.47	0.028	0.027	0.060	0.04	0.20			
2											
3											
4											
5											

1、以上所列出的典型数据，仅供参考；并不代表技术数据的最大值和最小值，也不用于最终设计。任一具体材料的数据可能与此表中所列出的数据有所不同；
2、本证明书不得复制。

有异议时，请三日内回复

技术部

Fan Label

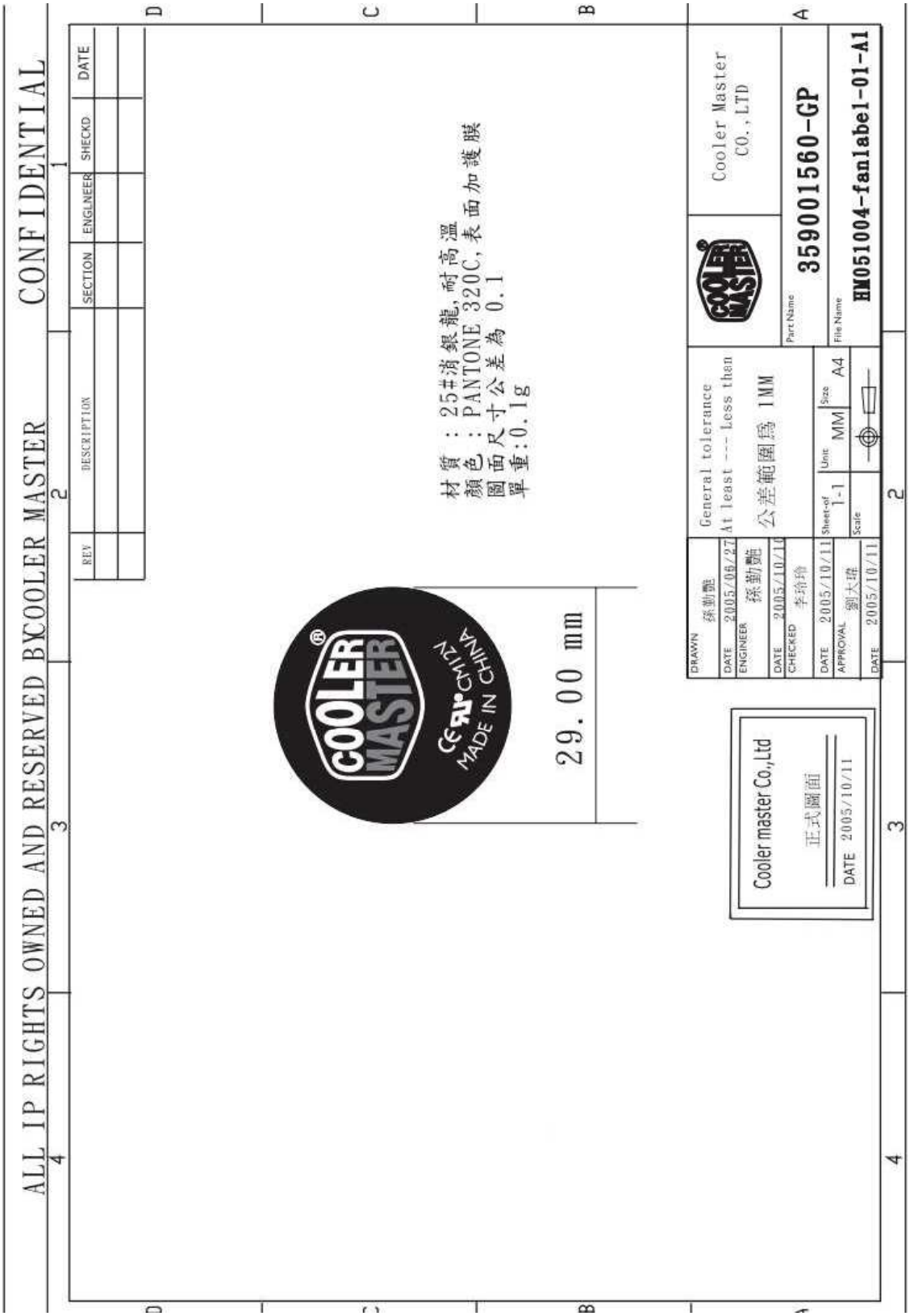
CONFIDENTIAL
ALL IP RIGHTS OWNED AND RESERVED BYCOOLER MASTER
REV
DESCRIPTION
SECTION
ENGINEER
SHECKD
DATE
材質 : 25#消銀龍,耐高溫
顏色 : PANTONE 320C,表面加護膜
圓面尺寸公差為 0.1
單重:0.1g
COOLER MASTER
MADE IN CHINA
29.00 mm
DRAWN 孫勤艷 DATE 2005/06/27
ENGINEER 孫勤艷 DATE 2005/10/10
CHECKED 李玲玲 DATE 2005/10/11
APPROVAL 劉大偉 DATE 2005/10/11
General tolerance
At least --- Less than
公差範圍爲 1MM
Sheet-of 1-1
Unit MM
Size A4
Scale
Cooler Master CO., LTD
Part Name 359001560-GP
File Name HK051004-fanlabel-01-A1
Cooler master Co.,Ltd
正式圖面
DATE 2005/10/11

Interface

Size (mm) : Φ24mm
Thickness: 0.1~0.15mm

Specification	Brand
7783D	ShinEtsu

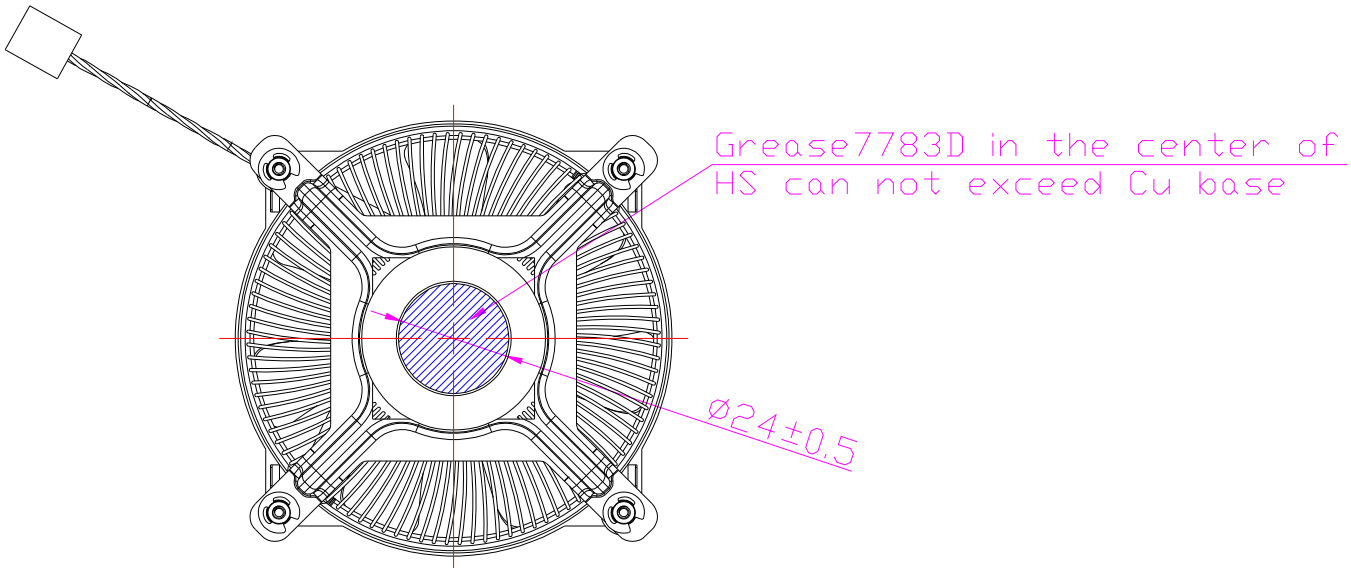

ShinEtsu

X-23-7783D

Thermal Interface Material

Description of Use

Thermal grease (X-23-7783D) is a thermal interface material developed by Shin-Etsu Chemical Co., Ltd. to meet the current and future thermal management requirements of high performance microprocessors. It is used to increase heat sink effectiveness by closing the air gap existing between the top of the processor and the fan heat sink. Air is a thermal insulator with a thermal conductivity of 0.027W/mK. The grease is applied to the raised area on top of the processor after the processor is in the socket. The fan heat sink is centered on the processor top, with the raised areas on the bottom of the heat sink and the processor top aligned. The fan heat sink is firmly pressed to evenly distribute the thermal grease until the metal of the heat sink is felt against the metal of the processor top. The excess grease can be removed by wiping with a soft cloth.

Typical Physical Properties

Appearance	Gray
Viscosity (25C)	1500 Poise
Bulk Thermal Conductivity	More than 4 W/mK (with solvent) More than 6 W/mK (w/o solvent, as X-23-7783)
Volatile Content (150C x 24hrs)	2.5%

Handling instruction

1. Suggest to store the material under 10 deg C. Once open the lid, please use it up as soon as possible.
2. Require stirring the material up before using.
3. X-23-7783D contains 2wt% of solvent as a diluted component for application of screen-printing. Therefore, require removing solvent after putting 7783D on substrate. Recommendable curing condition: 60 deg C x 30min

FAN

DELTA ELECTRONICS, INC.
252, SHANG YING ROAD, KUEI SAN
TAOYUAN HSIEN 333, TAIWAN, R. O. C.
TEL : 886-(0)3-3591968
FAX : 886-(0)3-3591991

SPECIFICATION FOR APPROVAL

Customer:	COOLMASTER		
Description:	DC FAN		
Customer P/N:	200007180-GP	REV:	
Delta Model NO.:	AFB0912VH-4E91	Delta Safety Model NO.:	AFB0912VH
Sample Rev:	05	Issue NO:	
Sample Issue Date:	OCT.29.2010.	Quantity:	

1. SCOPE:

THIS SPECIFICATION DEFINES THE ELECTRICAL AND MECHANICAL CHARACTERISTICS OF THE DC BRUSHLESS AXIAL FLOW FAN. THE FAN MOTOR IS WITH SINGLE PHASES AND FOUR POLES.

2. CHARACTERS:

ITEM	DESCRIPTION
RATED VOLTAGE	12.0 VDC
OPERATION VOLTAGE	7.0 - 12.5 VDC
INPUT CURRENT	0.40 (MAX. 0.60) A (SAFETY CURRENT 0.60A)
INPUT POWER	4.80 (MAX. 7.20) W
SPEED	4500±10% R.P.M.
MAX. AIR FLOW (AT ZERO STATIC PRESSURE)	1.634 (MIN. 1.471) M^3/MIN. 57.70 (MIN. 51.93) CFM
MAX. AIR PRESSURE (AT ZERO AIRFLOW)	6.60 (MIN. 6.97) mmH_2O 0.336 (MIN. 0.274) $inchH_2O$
ACOUSTICAL NOISE (AVG.)	47.5 (MAX. 51.5) dB-A
INSULATION TYPE	UL: CLASS A

(continued)

PART NO: 200007160-GP

DELTA MODEL: AFB0912VH-4E91

INSULATION STRENGTH	10 MEG OHM MIN. AT 500 VDC (BETWEEN FRAME AND (+) TERMINAL)
DIELECTRIC STRENGTH	5 mA MAX. AT 500 VAC 50/60 Hz ONE MINUTE, (BETWEEN FRAME AND (+) TERMINAL)
EXTERNAL COVER	OPEN TYPE
LIFE EXPECTANCE	70,000 HOURS CONTINUOUS OPERATION AT 40 °C WITH 15 ~ 65 %RH.
ROTATION	CLOCKWISE VIEW FROM NAME PLATE SIDE
OVER CURRENT SHUT DOWN	THE CURRENT WILL SHUT DOWN WHEN LOCKING ROTOR
LEAD WIRE	UL 1061 -F- AWG #26 BLACK WIRE:NEGATIVE(-) RED WIRE:POSITIVE(+) YELLOW WIRE:TACHOMETER OUTPUT (FGO) BLUE WIRE:SPEED CONTROL (PWM)

NOTES:
1. ALL READINGS ARE MEASURED AFTER STABLY WARMING UP THROUGH 10 MINUTES.
2. THE VALUES WRITTEN IN PARENS , ( ), ARE LIMITED SPEC.
3. ACOUSTICAL NOISE MEASURING CONDITION:

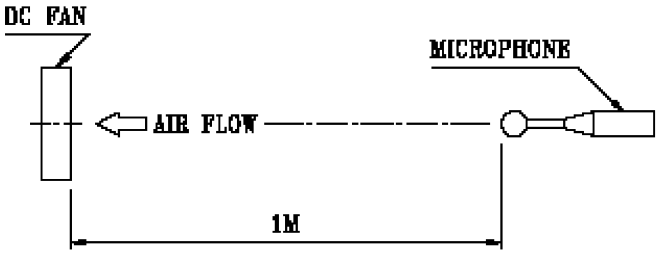

NOISE IS MEASURED AT RATED VOLTAGE IN FREE AIR IN ANECHOIC CHAMBER WITH B & K SOUND LEVEL METER WITH MICROPHONE AT A DISTANCE OF ONE METER FROM THE FAN INTAKE.

A00

page: 2

PART NO: 200007150-GP

DELTA MODEL: AFB0912VH-4E91

3. MECHANICAL:

3-1. DIMENSIONS ---------- SEE DIMENSIONS DRAWING

3-2. FRAME ---------- PLASTIC UL: 94V-0

3-3. IMPELLER ---------- PLASTIC UL: 94V-0

3-4. BEARING SYSTEM ---------- TWO BALL BEARINGS

3-5. WEIGHT ---------- 90 GRAMS

4. ENVIRONMENTAL:

4-1. OPERATING TEMPERATURE ---------- -10 TO +60 DEGREE C

4-2. STORAGE TEMPERATURE ---------- -40 TO +70 DEGREE C

4-3. OPERATING HUMIDITY ---------- 5 TO 90 % RH

4-4. STORAGE HUMIDITY ---------- 5 TO 95 % RH

5. PROTECTION:

5-1. LOCKED ROTOR PROTECTION

IMPEDANCE OF MOTOR WINDING PROTECTS MOTOR FROM FIRE IN 96 HOURS OF LOCKED ROTOR CONDITION AT THE RATED VOLTAGE.

5-2. POLARITY PROTECTION

BE CAPABLE OF WITHSTANDING IF REVERSE CONNECTION FOR POSITIVE AND NEGATIVE LEADS.

6. RE OZONE DEPLETING SUBSTANCES:

6-1. NO CONTAINING PBBs, PBBOs, CFCs, PBBEs, PBDPEs AND HCFCs.

7. PRODUCTION LOCATION

7-1. PRODUCTS WILL BE PRODUCED IN CHINA OR THAILAND OR TAIWAN.

PART NO:	200007180-GP
DELTA MODEL:	AFB0912VH-4E21

6. P & Q CURVE:

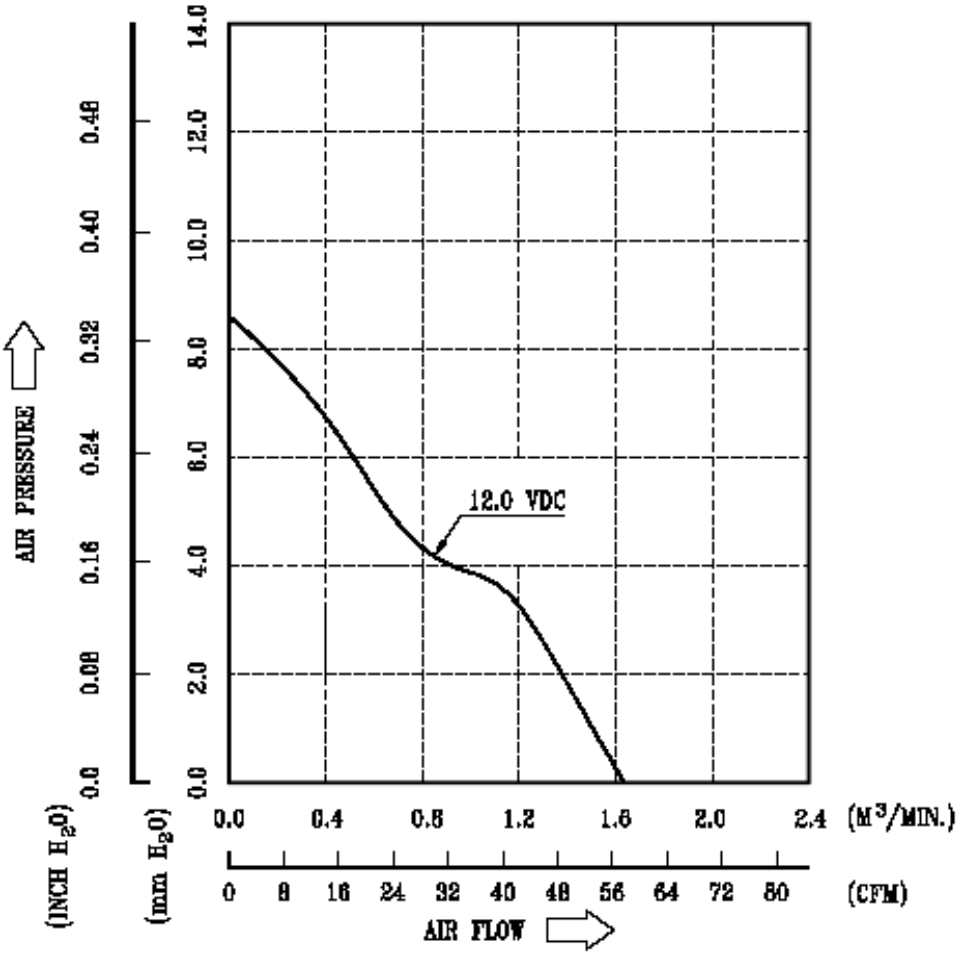

* TEST CONDITION: INPUT VOLTAGE ----- OPERATION VOLTAGE
TEMPERATURE ------ ROOM TEMPERATURE
HUMIDITY ---------- 65%RH

page: 4

A00

PART NO:	200007160-GP
DELTA MODEL:	AFB0912VH-4E91

9. DIMENSION DRAWING:

LABEL:

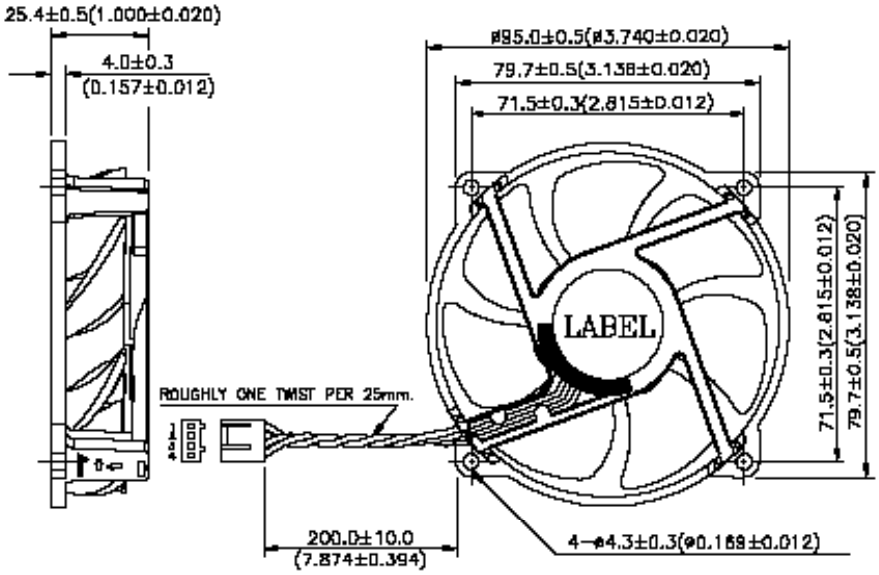

UNIT: MM(INCH)

NOTE : 1. UL 1061 -F- AWG #26
PIN 1 : BLACK WIRE: NEGATIVE(-)
PIN 2 : RED WIRE: POSITIVE(+)
PIN 3 : YELLOW WIRE: TACHOMETER OUTPUT (FOO)
PIN 4 : BLUE WIRE: SPEED CONTROL (PWM)
2. HOUSING : WIESON 2510CB88-001
3. TERMINAL : WIESON 2511-T1
4. BALANCE MATERIAL : SUS FOIL
5. THIS PRODUCT IS RoHS COMPLIANT

A00

page: 5

PART NO:	200007160-GP
DELTA MODEL:	AFB0912VH-4E91

10. FREQUENCY GENERATOR (FG) SIGNAL:

10-1. OUTPUT CIRCUIT - OPEN COLLECTOR MODE:

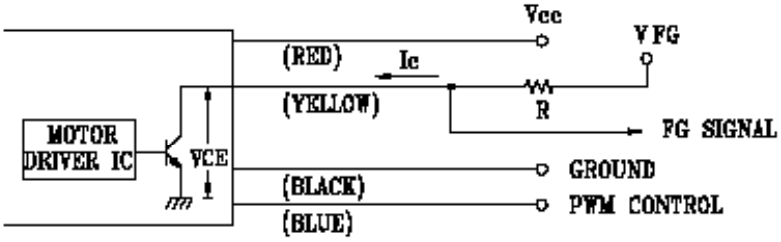

CAUTION: THE FG SIGNAL LEAD WIRE MUST BE KEPT AWAY FROM "+" LEAD WIRE & "-" LEAD WIRE.

10-2. SPECIFICATION:

V_{ce} (sat)=0.5V MAX. V_{cc} =5.0V TYP. (Vcc MAX.)

I_c =5mA MAX. $R \geq V_{cc}/I_c$

10-3. FREQUENCY GENERATOR WAVEFORM:

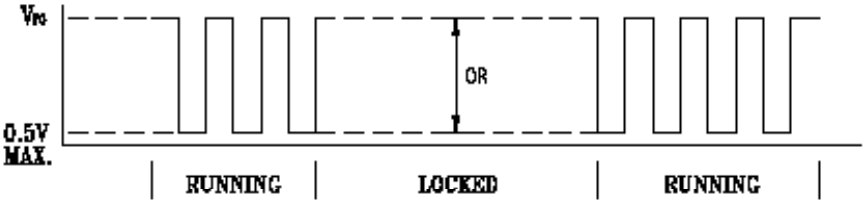

FAN RUNNING FOR 4 POLES

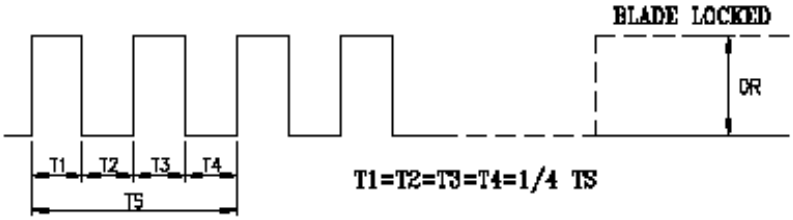

T1=T2=T3=T4=1/4 TS

N=R.P.M

TS=60/N(SEC)

*VOLTAGE LEVEL AFTER BLADE LOCKED

*4 POLES

PART NO:	200007180-GP
DELTA MODEL:	AFB0912VH-4E91

11. PWM CONTROL SIGNAL:

SIGNAL VOLTAGE RANGE: 0~20 VDC

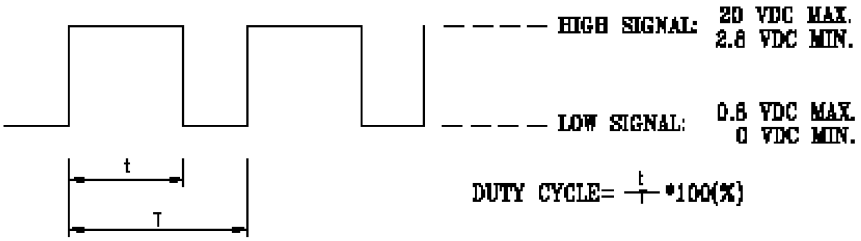

- THE PREFERRED OPERATING POINT FOR THE FAN IS 20K HZ.
- AT 100% DUTY CYCLE,THE ROTOR WILL SPIN AT MAXIMUM SPEED.
- AT 0% DUTY CYCLE,THE ROTOR WILL STOP SPIN.
- WITH CONTROL SIGNAL LEAD DISCONNECTED,THE FAN WILL SPIN AT MAXIMUM SPEED.

12. SPEED VS PWM CONTROL SIGNAL:

(AT 25°C, RATED VOLTAGE & PWM SIGNAL AS FOLLOW)

DUTY CYCLE (%)	SPEED R.P.M.	CURRENT (A) TYP.
100	4500±10%	0.13
75	3500±10%	0.32
50	2500±10%	0.10
25	1200±250	0.04
0	0	0.01

* PWM SIGNAL
PWM FREQUENCY = 20KHz

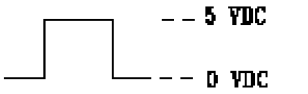

- MIN. START DUTY CYCLE : 30% (MAX.)
WHEN DUTY CYCLE IS SET FOR MORE THAN 30%, THE FAN WILL BE ABLE TO START FROM A DEAD STOP.

13. PWM CONTROL LEAD WIRE INPUT IMPEDANCE:

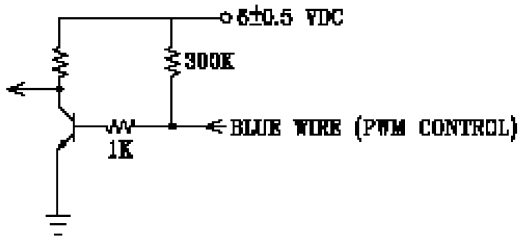

PART NO: 200007180-GP

DELTA MODEL: AFB0912VH-4E91

ATTACHMENT:TEST DATA FOR SAMPLE:

TEST ITEM	AIR PRESSURE mm H2O	AIR FLOW M3/MIN	SPEED R.P.M. TEST ITEM	RATED CURRENT (A)	NOISE dB (A)
SPEC / NO.	6.97MIN.	1.471MIN.	4500REF.	0.60MAX.	51.5MAX.
1	8.36	1.611	4436	0.37	47.2
2	8.75	1.648	4539	0.38	47.7
3	8.94	1.666	4589	0.40	47.9
4	8.89	1.662	4576	0.39	47.9
5	8.50	1.625	4474	0.36	47.4
6	8.89	1.661	4575	0.38	47.9
7	8.86	1.658	4567	0.39	47.8
8	9.09	1.680	4627	0.39	48.1
9	9.08	1.679	4623	0.40	48.1
10	8.87	1.659	4569	0.38	47.8

*TEST CONDITION:INPUT VOLTAGE---RATED VOLTAGE
TEMPERATURE---ROOM TEMPERATURE
HUMIDITY---65%RH

REPORTED BY	CHECKED BY	APPROVED BY.	Q.E
Yuewong	3/1/05	3/1/05	3/1/05

page: TEST DATA

PART NO: 200007180-GP

DELTA MODEL: AFB0912VH-4E91

ATTACHMENT:TEST DATA FOR SAMPLE:

	25%		50%		75%	
TEST ITEM	SPEED R.P.M. TEST ITEM	RATED CURRENT (A)	SPEED R.P.M. TEST ITEM	RATED CURRENT (A)	SPEED R.P.M. TEST ITEM	RATED CURRENT (A)
SPEC / NO.	1200REF.	0.04REF.	2500REF.	0.10REF.	3600REF.	0.22REF.
1	1179	0.04	2493	0.10	3606	0.22
2	1164	0.03	2501	0.10	3645	0.22
3	1184	0.03	2506	0.10	3615	0.22
4	1169	0.04	2492	0.11	3643	0.23
5	1188	0.04	2488	0.10	3589	0.22
6	1141	0.04	2460	0.11	3584	0.23
7	1154	0.03	2471	0.10	3556	0.21
8	1119	0.03	2393	0.10	3481	0.21
9	1172	0.04	2479	0.11	3598	0.23
10	1108	0.03	2386	0.11	3490	0.21

*TEST CONDITION-INPUT VOLTAGE---RATED VOLTAGE
TEMPERATURE---ROOM TEMPERATURE
HUMIDITY---65%RH

REPORTED BY	CHECKED BY	APPROVED BY.	Q.E
[illegible]	[illegible] 3/17'05	[illegible] 3/17'05	[illegible] 3/17'05

page: TEST DATA

Fan UL

ONLINE CERTIFICATIONS DIRECTORY

GPWV2.E132003
Fans, Electric - Component

Page Bottom

Fans, Electric - Component

See General Information for Fans, Electric - Component

DELTA ELECTRONICS INC E132003
252 SHANG YING RD
KUEI SHAN
TAOYUAN HSIEN, 333 TAIWAN

DC fans, Model AFB followed by 0405, followed by HA, HHA, LA or MA, followed by (Y), where (Y) may be xxxxx, where x may be A through Z, 0 through 9, "-" or blank; Model AFB followed by 0505, followed by HB, LB or MB, followed by (Y), where (Y) may be xxxxx, where x may be A through Z, 0 through 9, "-" or blank; Model AFB followed by 0512, followed by HB, HHB, LB or MB, followed by (Y), where (Y) may be xxxxx, where x may be A through Z, 0 through 9, "-" or blank; Model AFB followed by 0605, followed by H, L or M, followed by R00, R05, RR0 or RR05, followed by (Y), where (Y) may be xxxxx, where x may be A through Z, 0 through 9, "-" or blank; Model AFB followed by 0805, followed by H, L or M, followed by (Y); Model AFB followed by 0612, 0624, followed by EH, SH, VH, followed by (Y); Model AFB0612LB followed by (Y), where (Y) may be xxxxx, where x may be A through Z, 0 through 9, "-" or blank; Model AFB followed by 0612, 0624, 0812, 0824, 0912 or 0924, followed by H, HB, HH, HHB, L, LB, LLB, M, MB, SHB or VHB, followed by (Y), where (Y) may be xxxxx, where x may be A through Z, 0 through 9, "-" or blank; Models ASB0412MA, ASB0412LA, ASB0405MA followed by (Y); Model ASB followed by 0405, 0412, followed by HA, HHA, LA or MA, followed by (Y), where (Y) may be xxxxx, where x may be A through Z, 0 through 9, "-" or blank; Model ASB followed by 0505, followed by HB, LB or MB, followed by (Y), where (Y) may be xxxxx, where x may be A through Z, 0 through 9, "-" or blank; Model ASB followed by 0512, 0524, followed by HB, HHB, LB or MB, followed by (Y), where (Y) may be xxxxx, where x may be A through Z, 0 through 9, "-" or blank; Model ASB followed by 0812, 0824, followed by HB, HHB, LB, LLB, MB, SHB or VHB, followed by (Y), where (Y) may be xxxxx, where x may be A through Z, 0 through 9, "-" or blank; Model ASB followed by 0612 or 0624, followed by H, HH, L or M, followed by (Y), where (Y) may be xxxxx, where x may be A through Z, 0 through 9, "-" or blank; Model ASB followed by 0812, followed by L or M, followed by (Y); Model ASB followed by 0912 or 0924, followed by H, L or M, followed by (Y), where (Y) may be xxxxx, where x may be A through Z, 0 through 9, "-" or blank; Model AUB followed by 0505, 0512 or 0524, followed by HB, HHB, LB or MB, followed by (Y), where (Y) may be xxxxx, where x may be A through Z, 0 through 9, "-" or blank; Model AUB followed by 0812, 0824, followed by H, HH, L or M, followed by (Y), where (Y) may be xxxxx, where x may be A through Z, 0 through 9, "-" or blank; Model AUB followed by 0912, 0924, followed by H, HH, L, M or VH, followed by (Y), where (Y) may be xxxxx, where x may be A through Z, 0 through 9, "-" or blank; Model AUB followed by 0612 or 0624, followed by L, M, H or HH, followed by (Y), where (Y) may be xxxxx, where x may be A through Z, 0 through 9, "-" or blank; Model AUB followed by 0812 or 0824, followed by HB, HHB, LB, LLB, MB, SHB or VHB, followed by (Y), where (Y) may be xxxxx, where x may be A through Z, 0 through 9, "-" or blank; Model AUB followed by 0924, followed by L, M, H, HH or VH, followed by (Y), where (Y) may be xxxxx, where x may be A through Z, 0 through 9, "-" or blank; Model BFB followed by 1212, followed by H, HH, L, LL, M or VH, followed by (Y), where (Y) may be xxxxx, where x may be A through Z, 0 through 9, "-" or blank; Model BFB followed by 1224, followed by H, HH, L, LL, M or VH, followed by (Y), where (Y) may be xxxxx, where x may be A through Z, 0 through 9, "-" or blank; Model BFB followed by 1248, followed by H, HH, L, LL, M, followed by (Y), where (Y) may be xxxxx, where x may be A through Z, 0 through 9, "-" or blank; Model BFC followed by 1012, followed by A, B or C, followed by (Y), where (Y) may be xxxxx, where x may be A through Z, 0 through 9, "-" or blank; Model DFB followed by 0405 or 0412, followed by H, L, LL, M, followed by (Y), where (Y) may be xxxxx, where x may be A through Z, 0 through 9, "-" or blank; Model DFB followed by 0612, 0812, 0912, 0824 or 0924 followed by H, L or M, followed by (Y), where (Y) may be xxxxx, where x may be A through Z, 0 through 9, "-" or blank; Model DFB followed by 0612, 0812, 0824, 0912 or 0924, followed by HH, followed by (Y), where (Y) may be xxxxx, where x may be A through Z, 0 through 9, "-" or blank; Model DFB followed by 0424, followed by H, L, LL, M, followed by (Y), where (Y) may be xxxxx, where x may be A through Z, 0 through 9, "-" or blank; Model DFB followed by 0612, 0624, followed by H, HH, L or M, followed by (Y), where (Y) may be xxxxx, where x may be A through Z, 0 through 9, "-" or blank; Model DFC followed by 0612, 0812 or 0912, followed by "A" or "B", followed by (Y), where (Y) may be xxxxx, where x may be A through Z, 0 through 9, "-" or blank; Model DFD followed by 0612 or 0624, followed by H, HH, L or M, followed by (Y), where (Y) may be xxxxx, where x may be A through Z, 0 through 9, "-" or blank; Model SB followed by 0412, followed by H, L, LL or M, followed by (Y), where (Y) may be xxxxx, where x may be A through Z, 0 through 9, "-" or blank; Model SB followed by 0612, 0624, followed by HH, followed by (Y), where (Y) may be xxxxx, where x may be A through Z, 0 through 9, "-" or blank; Model SB followed by 0612, 0624, 0812, 0824, followed by H, L or M, followed by (Y), where (Y) may be xxxxx, where x may be A through Z, 0 through 9, "-" or blank; Model SB followed by 0612, 0624, followed by HD, LD or MD, followed by (Y), where (Y) may be xxxxx, where x may be A through Z, 0 through 9, "-" or blank; Model SB followed by 0812, 0824, followed by HH, followed by (Y), where (Y) may be xxxxx, where x may be A through Z, 0 through 9, "-" or blank; Model SB followed by 0812, followed by MSA or MSG, followed by (Y), where (Y) may be xxxxx, where x may be A through Z, 0 through 9, "-" or blank; Model AFC0612D(Y) where (Y) may be A through Z, 0 through 9, "-" or blank; Models AFB0612DH-8G33(Y), E47199 (Y), E47159(Y), DTC-CDA(Y), DTC-CDC(Y), FFR1212DHE(Y), FFR0812DHE(Y), KFB0612HD-8K16(Y), BFB0712HB-8A97(Y), KUC1012D(Y) series, where (Y) may be xxxxx, where x may be A through Z, 0 through 9, "-" or blank; Models TFA1424AG(Y), TFA1424AGL(Y), TFA1448(X)G(Y), TFA1448AGL(Y) series, where (X) may be A, B or C, (Y) may be xxxxx, where x may be A through Z, 0 through 9, "-" or blank

Model AFB followed by 02505, followed by HA, HHA, LA or MA, followed by (Y), where (Y) may be xxxxx, where x may be A through Z, 0 through 9, "-" or blank; Model AFB followed by 02512, followed by HA, HHA, LA or MA, followed by (Y), where (Y) may be xxxxx, where x may be A through Z, 0 through 9, "-" or blank; Model AFB followed by 0305, followed by -HA, -LA, -LLA, MA, followed by (Y), where (Y) may be xxxxx, where x may be A through Z, 0 through 9, "-" or blank; Model AFB followed by 0312, followed by -HA, LA, LLA, MA, followed by (Y), where (Y) may be xxxxx, where x may be A through Z, 0 through 9, "-" or blank; Model AFB followed by 03505, followed by HA, LA, MA, followed by (Y), where (Y) may be xxxxx, where x may be A through Z, 0 through 9, "-" or blank; Model AFB followed by 0405, followed by HD, LD or MD, followed by (Y), where (Y) may be xxxxx, where x may be A through Z, 0 through 9, "-" or blank; Model AFB followed by 03512, followed by LA, MA or HA, followed by (Y), where (Y) may be xxxxx, where x may be A through Z, 0 through 9, "-" or blank; Model AFB followed by 0405, 0412 or 0424, followed by HD, HHD, LD, MD, followed by (Y), where (Y) may be xxxxx, where x may be A through Z, 0 through 9, "-" or blank; Model AFB followed by 0412 or 0424, followed by HD, HHD, LD or MD, followed by (Y), where (Y) may be xxxxx, where x may be A through Z, 0 through 9, "-" or blank; Model AFB followed by 0505, 0512, followed by HA, LA or MA, followed by (Y), where (Y) may be xxxxx, where x may be A through Z, 0 through 9, "-" or blank; Model AFB followed by 0524, followed by HB, HHB, LB or MB, followed by (Y), where (Y) may be xxxxx, where x may be A through Z, 0 through 9, "-" or blank; Model AFB followed by 0605, followed by HB, HHB, LB, LLD, MB, followed by (Y), where (Y) may be xxxxx, where x may be A through Z, 0 through 9, "-" or blank; Model AFB followed by 0605, followed by LLD, followed by (Y), where (Y) may be xxxxx, where x may be A through Z, 0 through 9, "-" or blank; Model AFB followed by 0605, followed by HA, LA or MA, followed by (Y), where (Y) may be xxxxx, where x may be A through Z, 0 through 9, "-" or blank; Model AFB followed by 0612, followed by HA, HB, HHB, LA, MA or MB, followed by (Y), where (Y) may be xxxxx, where x may be A through Z, 0 through 9, "-" or blank; Model AFB followed by 0612 or 0624, followed by HD, HHD, LB, LD, LLD, MD, VHB or VHD, followed by (Y), where (Y) may be xxxxx, where x may be A through Z, 0 through 9, "-" or blank; Model AFB followed by 0624, followed by HB, HHB, LB, MB or VHB, followed by (Y), where (Y) may be xxxxx, where x may be A through Z, 0 through 9, "-" or blank; Model AFB followed by 0648, followed by EH, H, HH, L, M, SH or VH, followed by (Y), where (Y) may be xxxxx, where x may be A through Z, 0 through 9, "-" or blank; Model AFB followed by 0705, followed by H, L or M, followed by (Y), where (Y) may be xxxxx, where x may be A through Z, 0 through 9, "-" or blank; Model AFB followed by 0712 or 0724, followed by H, HA, HH, HHA, L, LA, M, MA, VH or VHA, followed by (Y), where (Y) may be xxxxx, where x may

be A through Z, 0 through 9, "-" or blank; Model AFB followed by 0748, followed by H, HH, L or MM, followed by (Y), where (Y) may be xxxxx, where x may be A through Z, 0 through 9, "-" or blank; Model AFB followed by 0812 or 0824, followed by LL, followed by (Y), where (Y) may be xxxxx, where x may be A through Z, 0 through 9, "-" or blank; Model AFB followed by 0812 or 0824, followed by H, L, LL, M, SH or VH, followed by (Y), where (Y) may be xxxxx, where x may be A through Z, 0 through 9, "-" or blank; Model AFB followed by 0812 or 0824, followed by HB, HHB, LB, LLB, MB, SHB or VHB, followed by (Y), where (Y) may be xxxxx, where x may be A through Z, 0 through 9, "-" or blank; Model AFB followed by 0848, followed by H, HH, L or M, followed by (Y), where (Y) may be xxxxx, where x may be A through Z, 0 through 9, "-" or blank; Model AFB followed by 0912 or 0924, followed by H, HH, L, M or VH, followed by (Y), where (Y) may be xxxxx, where x may be A through Z, 0 through 9, "-" or blank; Model AFB followed by 0948, followed by H, HH, L or M, followed by (Y), where (Y) may be xxxxx, where x may be A through Z, 0 through 9, "-" or blank; Model WFB followed by 1212, followed by ME, followed by (Y), where (Y) may be xxxxx, where x may be A through Z, 0 through 9, "-" or blank; Model WFB followed by 1212, followed by ME, followed by (Y), where (Y) may be xxxxx, where x may be A through Z, 0 through 9, "-" or blank; Model WFB followed by 1212, 1224 or 1248, followed by VHE, followed by (Y), where (Y) may be xxxxx, where x may be A through Z, 0 through 9, "-" or blank; Model WFB followed by 1248, followed by HHE, followed by (Y), where (Y) may be xxxxx, where x may be A through Z, 0 through 9, "-" or blank; Models AFC0812D followed by (Y), where (Y) may be xxxxx, where x may be A through Z, 0 through 9, "-" or blank; Model AFC0912D followed by (Y), where (Y) may be xxxxx, where x may be A through Z, 0 through 9, "-" or blank; Models AFB0512(Z)B-A(Y), AFB04512(Z)B(Y) Series, where (Y) may be xxxxx, where x may be A through Z, 0 through 9, "-" or blank, (Z) may be H, M and L; Models AFB02512MA-A(Y), AFB02512HA-A(Y), AFB02512HHA-A(Y), AFB0312LA-A(Y), AFB0312MA-A(Y), AFB0312HA-A(Y), AFB03512LA-A(Y), AFB03512MA-A(Y), AFB03512HA-A(Y), GFB1412EHT(Y), GFC1412DT(Y), AFB0748SH-SP(Y), BFB1712EHT(Y) Series, where (Y) may be xxxxx, where x may be A through Z, 0 through 9, "-" or blank.

Model EFB followed by 0912 or 0924, followed by H, HH, L, M, SH or VH.

Models WFB1212H(Y), WFB1212HE(Y), WFB1212M(Y), WFB1212ME(Y), WFB1212L(Y), WFB1212LE(Y), WFB1224H(Y), WFB1224HE(Y), WFB1224M(Y), WFB1224ME(Y), WFB1224L(Y), WFB1224LE(Y), WFB1212HH(Y), WFB1212HHE(Y), WFB1224HH(Y), WFB1224HHE(Y), WFB1248HE(Y), WFB1248ME(Y), WFB1248LE(Y), WFC1212B(Y), WFC1212BE(Y), KFB2348HHV(Y), KFB2348HHU(Y), KFB2348HV(Y), KFB2348HU(Y), KHB2348HHV(Y), KHB2348HHU(Y), KFB2324HHV(Y), KFB2324HHU(Y), KFB2524HHU(Y) Series, where (Y) may be xxxxx, where x may be A through Z, 0 through 9, "-" or blank.

Model BFB followed by 1212, 1224 followed by HE.

Model BFB followed by 0305, 03505, followed by HP, LP, MP.

Model AFB or ASB followed by 0505 or 0512, followed by HA, LA or MA.

Model BFB followed by 0712, 0724, followed by H, L, M, suffixed (Y); Model LFB0512HD(Y)Series, where (Y) may be xxxxx, where x may be A through Z, 0 through 9, "-" or blank.

Model BFC followed by 1212, followed by A, B; Models BFC1212C, BFC1224C, BFC1248C.

Model EFB followed by 0512, followed by HHA, HA, LA or MA; Models EFB0505HA, EFB0505MA, EFB0505LA followed by FOO or STD; Model EFB followed by 0505, followed by HA, LA or MA, followed by FOO or STD.

Model AFC followed by 0512, 0612, 0712, 0812, 0824, 0912 or 0924, followed by "A", "AB", "AD", "B", "BB", "BD" or "C"; Model AFC followed by 0912, followed by "A" or "B", followed by -(H), -(HH), -(M); Model ASC followed by 0612, 0812, 0912, followed by "A" or "B"; Model AFC0712D(Y), where (Y) may be A through Z, 0 through 9, "-" or blank.

Model ASB followed by 0605, followed by H, L, M, suffixed (Y); Model ASB followed by 0612, followed by H-SB, L-SB or M-SB, suffixed (Y); Model ASB followed by 0812 or 0824, followed by H, HH, L, LL or M, suffixed (Y); Model ASB followed by 0912, 0924, followed by H, HH, L, L-V, M, suffixed (Y); Model ASB followed by 0924, followed by H, HH, L or M, suffixed (Y); Model ASB0812L-SB, H-SB or M-SB suffixed (Y); Model ASB0912L-SB, ASB0912H-SB or ASB0912M-SB suffixed (Y); Model DSB followed by 0612, 0812, followed by H, H-N, L, L-N, M, M-N, suffixed (Y); Models DSB0624H-(Y), DSB0624M-(Y), DSB0624L-(Y), DSB0512HHB(Y), DSB0512HB(Y), DSB0512MB(Y), DSB0512LB(Y), DSB0512MD(Y), DSB0512LD(Y), DSB0612(X)-A(Y), DSB0612(X)D(Y), DSB0612(A)B(Y) Series, where (A) may be HH, H, M or L, (X) may be H, M or L, (Y) may be xxxxx, where x may be A through Z, 0 through 9, "-" or blank.

Model AFB followed by 0612, followed by H, HH, L, M, followed by SB; Model AFB followed by 0812, followed by H, L or M, followed by SB; Model AFB followed by 0912, followed by H, L or M, followed by SB.

Model AFB followed by 1212, followed by HE, HHE, LE, ME, VHE; Model AFB followed by 1224, followed by HE, HHE, LE, ME, VHE; Model AFB followed by 1248, followed by HE(Y), HHE(Y), LE(Y), ME(Y), VHE(Y), L, M, H, HH, VH, SH; Model EFB followed by 1212, followed by HE(Y), HHE(Y), LE(Y), ME(Y), SHE (Y), VHE(Y); Model EFB followed by 1224, followed by HE(Y), HHE(Y), LE(Y), ME(Y), SHE(Y), VHE(Y); Model EFB followed by 1248, followed by HE(Y), HHE (Y), LE(Y), ME(Y), SHE(Y), VHE(Y); Models AFB1212SHE(Y), AFB1212EHE(Y), AFB1212GHE(Y), AFB1224SHE(Y), AFB1224EHE(Y), AFB1224GHE(Y), AFB1248SHE(Y), AFB1248EHE(Y), AFB1248GHE(Y); Model AFB1348 followed by SHE(Y), VHE(Y), HHE(Y), HE(Y), where (Y) may be xxxxx, where x may be A through Z, 0 through 9, "-" or blank; Model AFB1348 followed by SHE(Y), VHE(Y), HHE(Y), HE(Y); Models AFB1312SHE(Y), AFB1312VHE(Y), AFB1312HHE(Y), AFB1312HE(Y), AFB1324SHE(Y), AFB1324VHE(Y), AFB1324HHE(Y), AFB1324HE(Y) Series; Models AFB1248MF(Y), AFB1248HF(Y), AFB1248HHF(Y), AFB1248VHF(Y), AFB1248SHF(Y), AFB1448HE(Y) series, where (Y) may be xxxxx, where x may be A through Z, 0 through 9, "-" or blank.

Model BFB followed by 1012, followed by H(Y), HH(Y), VH(Y), SH(Y), EH(Y), L(Y), LL(Y) or M(Y); Model BFB followed by 1024, followed by H, HH, L, LL or M, suffixed (Y); Model BFB followed by 1212, followed by H, HH, L, LL, M or VH, suffixed (Y); Model BFB followed by 1224, followed by H, HH, L, LL or M, suffixed (Y); Model BFB followed by 1248, followed by H, HH, L, LL or M, suffixed (Y); Models BFC1012D-A(Y), BFB1012VH-3F16(Y), BFB12(X)(Z)-A(Y); Model SFB0412VH/HH/H/M(Y), BFB04512HA-SM(Y) Series; Model BFB04512(X)(Y) series, where (X) may be MD/HD/HHD/VHD, (Y) may be (Y) may be xxxxx, where x may be A through Z, 0 through 9, "-" or blank; Models KFB2548HHU(Y), KFB2548HU(Y), BFB04512MD-S(Y) Series, where (X) may be 12, 24 or 48, (Z) may be GH, EH, SH or VH, (Y) may be (Y) may be xxxxx, where x may be A through Z, 0 through 9, "-" or blank.

Model BFB1224HHE-4J97(Y) Series; Model BFB followed by 1212, 1224, followed by HE, HHE, LE, ME or VH; Model BFB followed by 1248, followed by HE, LE or ME; Model BFB followed by 1612, followed by VH, H, L or M; Model BFB followed by 1624, followed by VH, H, L or M; Model BFB followed by 1648, followed by VH, H, L or M.

Models BFB0405HE, -LE, -ME, BFB0412HE, -HHE, -LE, -ME; Models BFB0412HN(Y), BSB0412HN(Y), where (Y) may be xxxxx, where x may be A through Z, 0 through 9, "-" or blank.

Model AUB08(X)(Z)(Y) series, where (X) 12 or 24, (Z) may be VH, HH, H, M or L, (Y) may be xxxxx, where x may be A through Z, 0 through 9, "-" or blank.

CSA INTERNATIONAL

CERTIFICATION RECORD

The company named below has been authorized by CSA International to represent the products listed in this record as "CSA Certified" and to affix the CSA Mark to these products according to the terms and conditions of the CSA Service Agreement and applicable CSA program requirements (including additional Markings).

File No: 091949_0_000
Class No: 3812 01 FANS AND BLOWERS

SUBMITTOR

4510824	Delta Electronics Inc 252 Shang Ying Rd Kuei San Taoyuan Hsien, 333 Taiwan

FACTORIES

4510824	Delta Electronics Inc 252 Shang Ying Rd Kuei San Taoyuan Hsien, 333 Taiwan
4665119	Delta Electronics (JiangSu) Ltd. No 1688 Jiangxing East Rd Wujiang Economic Development Zone Wujiang City, Jiangsu 215200 China
4678360	Delta Electronics (Thailand) Public Co., Ltd. 111 Moo 9 Wellgrow Ind Estate Bangna-Trad Road, Tambon Bangwua Amphur Bangpakong Chachoengsao, Chachoengsao 24180 Thailand
4753103	Delta Electronics (Dongguan) Co Ltd HeTianXia High Tech Industrial Pk

AFB0848H	48	110	-
AFB0848HH	48	120	-
AFB08512LD	12	140	0 to 9, A to Z, blank or "-"
AFB08512MD	12	200	0 to 9, A to Z, blank or "-"
AFB08512HD	12	270	0 to 9, A to Z, blank or "-"
AFB08512HHD	12	360	0 to 9, A to Z, blank or "-"
AFB08512VHD	12	600	0 to 9, A to Z, blank or "-"
AFB0912H	12	300	STD, F00, R00, F05, R05, RR0, RR05, A to Z, 0 to 9, blank or "-"
AFB0912H-A	12	300	0 to 9, A to Z
AFB0912HF	12	280	0 to 9, A to Z
AFB0912HH	12	400	STD, F00, R00, F05, R05, RR0, RR05, A to Z, 0 to 9, blank or "-"
AFB0912HH-A	12	400	0 to 9, A to Z
AFB0912HHF	12	420	0 to 9, A to Z
AFB0912H-SB	12	300	-
AFB0912L	12	150	STD, F00, R00, F05, R05, RR0, RR05, A to Z, 0 to 9, blank or "-"
AFB0912L-A	12	150	0 to 9, A to Z
AFB0912LF	12	130	0 to 9, A to Z
AFB0912L-SB	12	150	-
AFB0912M	12	200	STD, F00, R00, F05, R05, RR0, RR05, A to Z, 0 to 9, blank or "-"
AFB0912M-A	12	200	0 to 9, A to Z
AFB0912MF	12	190	0 to 9, A to Z
AFB0912M-SB	12	200	-
AFB0912SH-A	12	1000	0 to 9, A to Z
AFB0912SHF	12	900	0 to 9, A to Z
AFB0912SH	12	900	0 to 9, A to Z
AFB0912SH-SP16	12	900	0 to 9, A to Z
AFB0912SH-SP20	12	900	0 to 9, A to Z
AFB0912VH	12	600	STD, F00, R00, F05, R05, RR0, RR05, A to Z, 0 to 9, blank or "-"
AFB0912VH-A	12	600	0 to 9, A to Z

VDE Prüf- und Zertifizierungsinstitut

GUTACHTEN MIT FERTIGUNGSÜBERWACHUNG
CERTIFICATE OF CONFORMITY WITH FACTORY SURVEILLANCE

Delta Electronics Inc.
6F, No. 186, Ruey Kuang Road
11491 NEIHU, TAIPEI
TAIWAN

ist berechtigt, für ihr Produkt /
is authorized to use for their product

Einbauventilator für IT-Geräte
Fan for building-in, IT-equipment

die hier abgebildeten markenrechtlich geschützten Zeichen
für die ab Blatt 2 aufgeführten Typen zu benutzen /
the legally protected Marks as shown below for the types referred to on page 2 ff.

VDE REG.-Nr. 1764 oder/or VDE REG.-Nr. 1764 oder/or VDE-REG.-Nr. 1764

Geprüft und zertifiziert nach /
Tested and certified according to

DIN EN 60950-1:2006 + A11 (VDE 0805 Teil 1 + A11):2009-11; EN 60950-1:2006 + A11:2009-03
IEC 60950-1(ed.2)

Aktenzeichen: 1164100-2611-0001 / 130050
File ref.:

VDE Prüf- und Zertifizierungsinstitut GmbH
VDE Testing and Certification Institute
Zertifizierungsstelle / *Certification*

Ausweis-Nr. 1764 Blatt 1
Certificate No. *Page*

Weitere Bedingungen siehe Rückseite und Folgeblätter /
further conditions see overleaf and following pages

Offenbach, 1994-06-08
(letzte Änderung/updated 2010-06-08)

VDE Zertifikate sind nur gültig bei Veröffentlichung unter: http://www.vde.com/zertifikat
VDE certificates are valid only when published on: http://www.vde.com/certificate

VDE

VDE Prüf- und Zertifizierungsinstitut
Gutachten mit Fertigungsüberwachung

Ausweis-Nr. / Certificate No. 1764 | Blatt / page 2

Name und Sitz des Genehmigungs-Inhabers / *Name and registered seat of the Certificate holder*
Delta Electronics Inc., 6F, No. 186, Ruey Kuang Road, 11491 NEIHU, TAIPEI, TAIWAN

Aktenzeichen / *File ref.*
1164100-2611-0001 / 130050 / FG13 / DO

letzte Änderung / *updated* 2010-06-08 | Datum / *Date* 1994-06-08

Dieses Blatt gilt nur in Verbindung mit Blatt 1 des Gutachtens mit Fertigungsüberwachung Nr. 1764.
This supplement is only valid in conjunction with page 1 of the Certificate of Conformity with factory surveillance No. 1764.
endif

Einbauventilator für IT-Geräte
Fan for building-in, IT-equipment

Typ(en) / *Type(s)*:

WFB1224HE	DC 24 V
ASB0612H/M/L/HH	DC 12 V
ASB0624H/M/L/HH	DC 24 V
BFB1212HE	DC 12 V
AFB0605H/M/L	DC 5 V
AFB0505HA/LA/MA	DC 5 V
AFB0512HA/LA/MA	DC 12 V
BFB0712H/L/M	DC 12 V
BFB0724H/L/M	DC 24 V
AFB0405LA/MA/HA/HHA	DC 5 V
AFB0412LA/MA/HA/HHA	DC 12 V
ASB0605L	DC 5 V
ASB0605M	DC 5 V
ASB0605H	DC 5 V
DSB0812L/M/H	DC 12 V
AFC0812A/B	DC 12 V
AFC0912A/B	DC 12 V
BFC1212A/B	DC 12 V
BFB1212LL/L/M/H/HH/VH	DC 12 V
BFB1224LL/L/M/H/HH/VH	DC 24 V
AFB0405LD/MD/HD	DC 5 V
AFB0412LD/MD/HD/HHD	DC 12 V
AFB0424LD/MD/HD/HHD	DC 24 V
AFB0612LA/MA/HA	DC 12 V
ASB0812LL/L/M/H/HH	DC 12 V
ASB0912L/M/H/HH	DC 12 V
ASB0824LL/L/M/H/HH	DC 24 V
ASB0924L/M/H/HH	DC 24 V
AFB0705L/M/H	DC 5 V
AFB0712L/M/H/HH/VH	DC 12 V
AFB0724L/M/H/HH/VH	DC 24 V
AFB0812LL/L/M/H/HH/VH/SH	DC 12 V
AFB0824LL/L/M/H/HH/VH/SH	DC 24 V
AFB0912L/M/H/HH/VH	DC 12 V
AFB0924L/M/H/HH/VH	DC 24 V
AFC0612A	DC 12 V

Fortsetzung siehe Blatt 3 /
continued on page 3

VDE Prüf- und Zertifizierungsinstitut
Gutachten mit Fertigungsüberwachung

Ausweis-Nr. / Certificate No.	Blatt / page
1764	7

Name und Sitz des Genehmigungs-Inhabers / *Name and registered seat of the Certificate holder*
Delta Electronics Inc., 6F, No. 186, Ruey Kuang Road, 11491 NEIHU, TAIPEI, TAIWAN

Aktenzeichen / *File ref.*	letzte Änderung / *updated*	Datum / *Date*
1164100-2611-0001 / 130050 / FG13 / DO	2010-06-08	1994-06-08

Dieses Blatt gilt nur in Verbindung mit Blatt 1 des Gutachtens mit Fertigungsüberwachung Nr. 1764.
This supplement is only valid in conjunction with page 1 of the Certificate of Conformity with factory surveillance No. 1764.
endif

Weitere Angaben	siehe Anlagen Nr. 1 - 53
Further information	*see Appendices No. 1 - 53*

Dieser Zeichengenehmigungs-Ausweis bildet eine Grundlage für die EG-Konformitätserklärung und CE-Kennzeichnung durch den Hersteller oder dessen Bevollmächtigten und bescheinigt die Konformität mit den grundlegenden Schutzanforderungen der **EG-Niederspannungsrichtlinie 2006/95/EG** mit ihren Änderungen.
This Marks Approval is a basis for the EC Declaration of Conformity and the CE Marking by the manufacturer or his agent and proves the conformity with the essential safety requirements of the ***EC Low-Voltage Directive 2006/95/EC*** *including amendments.*

VDE Prüf- und Zertifizierungsinstitut GmbH
VDE Testing and Certification Institute
Fachgebiet FG13
Section FG13

VDE Prüf- und Zertifizierungsinstitut
Gutachten mit Fertigungsüberwachung

Ausweis-Nr. / *Certificate No.* 1764 — Beiblatt / *Supplement*

Name und Sitz des Genehmigungs-Inhabers / *Name and registered seat of the Certificate holder*
Delta Electronics Inc., 6F, No. 186, Ruey Kuang Road, 11491 NEIHU, TAIPEI, TAIWAN

Aktenzeichen / *File ref.*
1164100-2611-0001 / 130050 / FG13 / DO

letzte Änderung / *updated* 2010-06-08 — Datum / *Date* 1994-06-08

Dieses Beiblatt ist Bestandteil des Gutachtens mit Fertigungsüberwachung Nr. 1764.
This supplement is part of the Certificate of Conformity with factory surveillance No. 1764.

Einbauventilator für IT-Geräte
Fan for building-in, IT-equipment

Fertigungsstätte(n)
Place(s) of manufacture

Referenz/*Reference* **30009495**	Delta Electronics Components (DongGuan) Co., Ltd. HeTianxia High-Tech Industrial Park 523300 SHIJIE TOWN, DONGGUAN CITY Guangdong CHINA
Referenz/*Reference* **30011790**	Delta Electronics (Jiang Su) Ltd. No. 1688 Jiangxiang East Road Wujiang Economy Developm. Zone 215200 WUJIANG CITY, SUZHOU CITY Jiangsu CHINA
Referenz/*Reference* **30013236**	Delta Electronics (Thailand) Public Co., Ltd. 111 Moo 9 Wellgrow Industrial Est. Bangna-Trad Rd. Tambon Bangwa, Bangpakong TH-24180 CHACHOENGSAO

VDE Prüf- und Zertifizierungsinstitut GmbH
VDE Testing and Certification Institute
Fachgebiet FG13
Section FG13

VDE Prüf- und Zertifizierungsinstitut
Gutachten mit Fertigungsüberwachung

Ausweis-Nr. / *Certificate No.* 1764 — Infoblatt / *Info sheet*

Name und Sitz des Genehmigungs-Inhabers / *Name and registered seat of the Certificate holder*
Delta Electronics Inc., 6F, No. 186, Ruey Kuang Road, 11491 NEIHU, TAIPEI, TAIWAN

Aktenzeichen / *File ref.*	letzte Änderung / *updated*	Datum / *Date*
1164100-2611-0001 / 130050 / FG13 / DO	2010-06-08	1994-06-08

Dieses Blatt gilt nur in Verbindung mit Blatt 1 des Gutachtens mit Fertigungsüberwachung Nr. 1764.
This supplement is only valid in conjunction with page 1 of the Certificate of Conformity with factory surveillance No. 1764.
endif

Genehmigung zum Benutzen des auf Seite 1 abgebildeten markenrechtlich geschützten Zeichens des VDE:

Grundlage für die Benutzung sind die Allgemeinen Geschäftsbedingungen (AGB) des VDE Prüf- und Zertifizierungsinstitut GmbH. Das Recht zur Benutzung erstreckt sich nur auf die bezeichnete Firma mit den genannten Fertigungsstätten und die oben aufgeführten Produkte mit den zugeordneten Bezeichnungen. Die Fertigungsstätte muss so eingerichtet sein, dass eine gleichmäßige Herstellung der geprüften und zertifizierten Ausführung gewährleistet ist.
Die Genehmigung ist so lange gültig wie die VDE-Bestimmungen gelten, die der Zertifizierung zugrunde gelegen haben, sofern sie nicht auf Grund anderer Bedingungen aus der Prüf- und Zertifizierungsordnung (PM102) zurückgezogen werden muss.
Der Gültigkeitszeitraum einer VDE-GS-Zeichengenehmigung kann auf Antrag verlängert werden. Bei gesetzlichen und / oder normativen Änderungen kann die VDE-GS-Zeichengenehmigung ihre Gültigkeit zu einem früheren als dem angegebenen Datum verlieren.
Produkte, die das Biozid Dimethylfumarat (DMF) enthalten, dürfen gemäß der Kommissionsentscheidung 2009/251/EG nicht mehr in den Verkehr gebracht oder auf dem Markt bereitgestellt werden.
Der VDE-Zeichengenehmigungsausweis wird ausschließlich auf der ersten Seite unterzeichnet.

Approval to use the legally protected Mark of the VDE as shown on the first page:
Basis for the use are the gerneral terms and conditions of the VDE Testing and Certification Institute. The right to use the mark is granted only to the mentioned company with the named places of manufacture and the listed products with the related type references. The place of manufacture shall be equipped in a way that a constant manufacturing of the certified construction is assured.
The approval is valid as long as the VDE specifications are in force , on which the certification is based on, unless it is withdrawn accordiProcedure (PM102).
The validity period of a VDE-GS-Mark Approval may be prolonged on request. In case of changes in legal and / or normative requirements, the validity period of a VDE-GS-Mark Approval may be shortened.
Products containing the biocide dimethylfumarate (DMF) may not be marketed or made available on the EC market according to the Commission Decision 2009/251/EC.
The approval is solely signed on the first page

8. Package

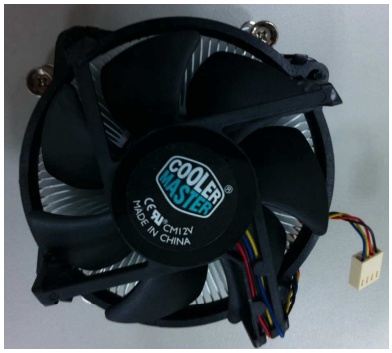

12PCS color box in carton
6 pcs in one layer
Total 2 layers in one carton
Total 12pcs/ctn

Carton size : 412*278*267
Gross weight : 9.132Kg

9. CE/UL

CE

SPORTON LAB.

NVLAP LAB CODE 200079-0

Certificate No: EC621413

CERTIFICATE

EQUIPMENT : Cooler
MODEL NO. : XXXXXXXXXXXXXXX (X=0-9, a-z, blank or "–")
APPLICANT : Cooler Master Co., Ltd.
9F, No. 786, Chung-Cheng Rd., Chung-Ho City,
Taipei Hsien, 235 Taiwan, R.O.C.

SPORTON LAB.

I HEREBY CERTIFY THAT:

THE MEASUREMENTS SHOWN IN THIS TEST REPORT WERE MADE IN ACCORDANCE WITH THE PROCEDURES GIVEN IN **EUROPEAN COUNCIL DIRECTIVE 89/336/EEC.** THE EQUIPMENT WAS **PASSED** THE TEST PERFORMED ACCORDING TO
European Standard EN 55022:1998/A1:2000/A2:2003 Class B, EN 61000-3-2:2000, EN 61000-3-3:1995/A1:2001 and EN 55024:1998/A1:2001/A2:2003 (IEC 61000-4-2:1995/A2:2000, IEC 61000-4-3:1995/A2:2002, IEC 61000-4-4:1995/A2:2001, IEC 61000-4-5:1995/A1:2000, IEC 61000-4-6:1996/A1:2000, IEC 61000-4-8:1993/A1:2000, IEC 61000-4-11:1994/A1:2000).
THE TEST WAS CARRIED OUT ON **Feb. 16, 2006** AT **SPORTON INTERNATIONAL INC.** LAB.

Jones Chan Feb. 24. 2006

Jones Chan
Supervisor

ONLINE CERTIFICATIONS DIRECTORY

NWGQ2.E189887
Information Technology Equipment Including Electrical Business Equipment - Component

Page Bottom

Information Technology Equipment Including Electrical Business Equipment - Component

See General Information for Information Technology Equipment Including Electrical Business Equipment - Component

COOLER MASTER CO LTD E189887
9TH FL
786 CHUNG-CHENG RD
CHUNG-HO
TAIPEI HSIEN, 235 TAIWAN

COOLER FAN, Model(s) A1A2-A3A4A5-A6A7A8A9-A10A11, RF-UCPUCF, B1B2-B3B4B5-B6B7B8B9-B10B11, C1C2-C3C4C5-C6C7C8C9-C10C11, D1D2-D3D4D5-D6D7D8D9, E1E2E3-E4E5E6E7E8-E9E10-E11E12, F1F2F3-F4F5F6F7F8-F9F10-F11F12, G1G1G3G4G5, SNK-PH1H2H3H4H5H6H7, X1X2-X3X4X5-X6X7X8X9-X10-X11.

Liquid Cooling System for CPU, Model(s) ELD-00002-01-GP, ELD-0002-01-GP.

Component Dsg	Rated Input, V	Load Amps	Flame Rating	Laser Class
CPU Coolers				
XXX40ZZZZZZZZ*	3.3/240dc	0.5/0.5	N/A	N/A
XXX48ZZZZZZZZ*	3.3/240dc	0.5/0.5	N/A	N/A
XXX50ZZZZZZZZ*	3.3/240dc	0.5/0.5	N/A	N/A
XXX52ZZZZZZZZ*	3.3/240dc	0.5/0.5	N/A	N/A
XXX60ZZZZZZZZ*	3.3/240dc	0.5/0.5	N/A	N/A
XXXC0ZZZZZZZZ*	3.3/24dc	0.5/0.5	N/A	N/A
Fan arrays				
CMXXXV*#	3.3/240ac-dc	0.5/0.5	N/A	N/A

- Electrical and fire enclosure provided in the end product. Suitability of wiring, connectors and terminals determined in the end product. All internal parts rated min V-2. Terminals and connectors suitable for factory wiring only.

* - Intended to be connected to a SELV limited power source. The suitability of thre R/C (GPWV2) fan is to be evaluated in the end product. Model number, voltage, current and CFM ratings and heatsink dimensions are controlled in the end product report.

X - Where X represents any alphanumeric character or blank.

Z - Where Z represents any alphanumeric character or blank.

Marking: Company name or tradename "E189887" or trademark and model designation.
Last Updated on 2008-11-05

Questions? Notice of Disclaimer Page Top

Copyright ?2009 Underwriters Laboratories Inc.®

The appearance of a company's name or product in this database does not in itself assure that products so identified have been manufactured under UL's Follow-Up Service. Only those products bearing the UL Mark should be considered to be Listed and covered under UL's Follow-Up Service. Always look for the Mark on the product.

UL permits the reproduction of the material contained in the Online Certification Directory subject to the following conditions: 1. The Guide Information, Designs and/or Listings (files) must be presented in their entirety and in a non-misleading manner, without any manipulation of the data (or drawings). 2. The statement "Reprinted from the Online Certifications Directory with permission from Underwriters Laboratories Inc." must appear adjacent to the extracted material. In addition, the reprinted material must include a copyright notice in the following format: "Copyright © 2009 Underwriters Laboratories Inc.®"

An independent organization working for a safer world with integrity, precision and knowledge.

HS-SGS

SGS

Test Report No. CANEC0803742601 Date: 18 Jul 2008 Page 1 of 4

HUIZHOU GUANGHUI PRECISION ALUMINUM CO., LTD.
JIU LONG ROAD SIDE XIAO JIN KOU HUI ZHOU CITY GUANGDONG
CHINA

The following sample(s) was/were submitted and identified on behalf of the clients as :
6063铝合金

SGS Job No.	:	11161089 - GZ
SGS Internal Reference No.	:	2.1
Date of Sample Received	:	11 Jul 2008
Testing Period	:	11 Jul 2008 - 17 Jul 2008
Test Requested	:	Selected test(s) as requested by client.
Test Method	:	Please refer to next page(s).
Test Results	:	Please refer to next page(s).
Conclusion	:	A: Based on the performed tests on submitted sample(s), the results **comply with** the RoHS Directive 2002/95/EC and its subsequent amendments.

Signed for and on behalf of
SGS-CSTC Ltd.

Huang Fang, Sunny
Sr. Engineer

COPY

This document is issued by the Company under its General Conditions of Service printed overleaf or available on request and accessible at http://www.sgs.com/terms_and_conditions.htm. Attention is drawn to the limitation of liability, indemnification and jurisdiction issues defined therein. Any holder of this document is advised that information contained hereon reflects the Company's findings at the time of its intervention only and within the limits of Client's instructions, if any. The Company's sole responsibility is to its Client and this document does not exonerate parties to a transaction from exercising all their rights and obligations under the transaction documents. Any unauthorized alteration, forgery or falsification of the content or appearance of this document is unlawful and offenders may be prosecuted to the fullest extent of the law.
Unless otherwise stated the results shown in this test report refer only to the sample(s) tested. This document cannot be reproduced except in full, without prior approval of the Company.

GZCM 2352666
SGS-CSTC Standards Technical Services Co., Ltd. Guangzhou branch
198 Kezhu Road, Scientech Park Guangzhou Economic & Technology Development District, Guangzhou, China 510663 t (86-20)82155555 f (86-20)82075113 www.cn.sgs.com
中国·广州·经济技术开发区科学城科珠路198号 邮编:510663 t (86-20)82155555 f (86-20)82075113 e sgs.china@sgs.com
Member of the SGS Group (SGS SA)

SGS

Test Report No. CANEC0803742601 Date: 18 Jul 2008 Page 2 of 4

Test Results:

ID for specimen 1 : CAN08-037426.001
Description for specimen 1 : Silvery metal

A: RoHS Directive 2002/95/EC

Test Item(s)	Unit	Test Method (Reference)	Result	MDL	Limit
Cadmium (Cd)	mg/kg	IEC 62321/2nd CDV (111/95/CDV), ICP-OES	N.D.	2	100
Lead (Pb)	mg/kg	IEC 62321/2nd CDV (111/95/CDV), ICP-OES	19	2	1000
Mercury (Hg)	mg/kg	IEC 62321/2nd CDV (111/95/CDV), ICP-OES	N.D.	2	1000
Hexavalent Chromium (CrVI) by boiling water extraction	-	IEC 62321/2nd CDV (111/95/CDV), UV-Vis	Negative	◇	#
Sum of PBBs	mg/kg	-	N.D.	-	1000
Monobromobiphenyl	mg/kg	IEC 62321/2nd CDV (111/95/CDV), GC-MS	N.D.	5	
Dibromobiphenyl	mg/kg	IEC 62321/2nd CDV (111/95/CDV), GC-MS	N.D.	5	
Tribromobiphenyl	mg/kg	IEC 62321/2nd CDV (111/95/CDV), GC-MS	N.D.	5	
Tetrabromobiphenyl	mg/kg	IEC 62321/2nd CDV (111/95/CDV), GC-MS	N.D.	5	
Pentabromobiphenyl	mg/kg	IEC 62321/2nd CDV (111/95/CDV), GC-MS	N.D.	5	
Hexabromobiphenyl	mg/kg	IEC 62321/2nd CDV (111/95/CDV), GC-MS	N.D.	5	
Heptabromobiphenyl	mg/kg	IEC 62321/2nd CDV (111/95/CDV), GC-MS	N.D.	5	
Octabromobiphenyl	mg/kg	IEC 62321/2nd CDV (111/95/CDV), GC-MS	N.D.	5	
Nonabromobiphenyl	mg/kg	IEC 62321/2nd CDV (111/95/CDV), GC-MS	N.D.	5	
Decabromobiphenyl	mg/kg	IEC 62321/2nd CDV (111/95/CDV), GC-MS	N.D.	5	
Sum of PBDEs	mg/kg	-	N.D.	-	1000
Monobromodiphenyl ether	mg/kg	IEC 62321/2nd CDV (111/95/CDV), GC-MS	N.D.	5	
Dibromodiphenyl ether	mg/kg	IEC 62321/2nd CDV (111/95/CDV), GC-MS	N.D.	5	
Tribromodiphenyl ether	mg/kg	IEC 62321/2nd CDV (111/95/CDV), GC-MS	N.D.	5	
Tetrabromodiphenyl ether	mg/kg	IEC 62321/2nd CDV (111/95/CDV), GC-MS	N.D.	5	
Pentabromodiphenyl ether	mg/kg	IEC 62321/2nd CDV (111/95/CDV), GC-MS	N.D.	5	
Hexabromodiphenyl ether	mg/kg	IEC 62321/2nd CDV (111/95/CDV), GC-MS	N.D.	5	
Heptabromodiphenyl ether	mg/kg	IEC 62321/2nd CDV (111/95/CDV), GC-MS	N.D.	5	
Octabromodiphenyl ether	mg/kg	IEC 62321/2nd CDV (111/95/CDV), GC-MS	N.D.	5	
Nonabromodiphenyl ether	mg/kg	IEC 62321/2nd CDV (111/95/CDV), GC-MS	N.D.	5	
Decabromodiphenyl ether ##	mg/kg	IEC 62321/2nd CDV (111/95/CDV), GC-MS	N.D.	5	

This document is issued by the Company under its General Conditions of Service printed overleaf or available on request and accessible at http://www.sgs.com/terms_and_conditions.htm. Attention is drawn to the limitation of liability, indemnification and jurisdiction issues defined therein. Any holder of this document is advised that information contained hereon reflects the Company's findings at the time of its intervention only and within the limits of Client's instructions, if any. The Company's sole responsibility is to its Client and this document does not exonerate parties to a transaction from exercising all their rights and obligations under the transaction documents. Any unauthorized alteration, forgery or falsification of the content or appearance of this document is unlawful and offenders may be prosecuted to the fullest extent of the law.
Unless otherwise stated the results shown in this test report refer only to the sample(s) tested. This document cannot be reproduced except in full, without prior approval of the Company.

SGS-CSTC Standards Technical Services (Guangzhou) Co., Ltd.
198 Kezhu Road, Scientech Park Guangzhou Economic & Technology Development District, Guangzhou China 510663 t (86-20)82155555 f (86-20)82075113 www.cn.sgs.com
中国·广州·经济技术开发区科学城科珠路198号 邮编: 510663 t (86-20)82155555 f (86-20)82075113 e sgs.china@sgs.com

GZCM 2352667

Member of the SGS Group (SGS SA)

SGS

Test Report No. CANEC0803742601 Date: 18 Jul 2008 Page 3 of 4

Note:
1. mg/kg = ppm
2. N.D. = Not Detected (< MDL)
3. MDL = Method Detection Limit
4. ## = The exemption of DecaBDE in polymeric application according 2005/717/EC was overruled by the European Court of Justice by its decision of 01.04.2008. Subsequently DecaBDE will be included in the sum of PBDE after 01.07.2008
5. ◊ = Spot-Test:
   Negative = Absence of CrVI coating, Positive = Presence of CrVI coating;
   (The tested sample should be further verified by boiling-water-extraction method if the spot test result is negative or cannot be confirmed.)
   Boiling-water-extraction:
   Negative = Absence of CrVI coating
   Positive = Presence of CrVI coating; the detected concentration in boiling-water-extraction solution is equal or greater than 0.02 mg/kg with 50 cm² sample surface area.
6. # = Positive indicates the presence of CrVI on the tested areas.
   Negative indicates the absence of CrVI on the tested areas.
7. "-" = Not regulated

B: PFOS (Perfluorooctane sulfonates)

Test Item(s)	Unit	Test Method (Reference)	Result	MDL
Perfluorooctane sulfonates (PFOS) PFOS - Acid PFOS - Metal Salt PFOS - Amide	mg/kg	EPA 3540C: 1996, LC-MS	N.D.	10

Note:
1. mg/kg = ppm
2. N.D. = Not Detected (< MDL)
3. MDL = Method Detection Limit

Reference Information: Directive 2006/122/EC
(1) May not be placed on the market or used as a substance or constituent of preparations in a concentration equal to or higher than 0,005 % by mass.
(2) May not be placed on the market in semi-finished products or articles, or parts thereof, if the concentration of PFOS is equal to or higher than 0,1 % by mass calculated with reference to the mass of structurally or microstructurally distinct parts that contain PFOS or, for textiles or other coated materials, if the amount of PFOS is equal to or higher than 1μg /m² of the coated material.

COPY

惠州酷冷精密科技有限公司

This document is issued by the Company under its General Conditions of Service printed overleaf or available on request and accessible at http://www.sgs.com/terms_and_conditions.htm. Attention is drawn to the limitation of liability, indemnification and jurisdiction issues defined therein. Any holder of this document is advised that information contained hereon reflects the Company's findings at the time of its intervention only and within the limits of Client's instructions, if any. The Company's sole responsibility is to its Client and this document does not exonerate parties to a transaction from exercising all their rights and obligations under the transaction documents. Any unauthorized alteration, forgery or falsification of the content or appearance of this document is unlawful and offenders may be prosecuted to the fullest extent of the law.
Unless otherwise stated the results shown in this test report refer only to the sample(s) tested. This document cannot be reproduced except in full, without prior approval of the Company.

GZCM 2352668
SGS-CSTC Standards Technical Services Co., Ltd. Guangzhou branch, Member of the SGS Group
198 Kezhu Road, Scientech Park Guangzhou Economic & Technology Development District, Guangzhou, China 510663 t (86-20)82155555 f (86-20)82075113 www.cn.sgs.com
中国·广州·经济技术开发区科学城科珠路198号 邮编:510663 t (86-20)82155555 f (86-20)82075113 e sgs.china@sgs.com
Member of the SGS Group (SGS SA)

SGS

Test Report

No. CANEC0803742601 Date: 18 Jul 2008 Page 4 of 4

Sample photo:

SGS authenticate the photo on original report only

*** End of Report ***

This document is issued by the Company under its General Conditions of Service printed overleaf or available on request and accessible at http://www.sgs.com/terms_and_conditions.htm. Attention is drawn to the limitation of liability, indemnification and jurisdiction issues defined therein. Any holder of this document is advised that information contained hereon reflects the Company's findings at the time of its intervention only and within the limits of Client's instructions, if any. The Company's sole responsibility is to its Client and this document does not exonerate parties to a transaction from exercising all their rights and obligations under the transaction documents. Any unauthorized alteration, forgery or falsification of the content or appearance of this document is unlawful and offenders may be prosecuted to the fullest extent of the law.
Unless otherwise stated the results shown in this test report refer only to the sample(s) tested. This document cannot be reproduced except in full, without prior approval of the Company.

GZCM 2352669
SGS-CSTC Standards Technical Services Co., Ltd. Guangzhou Branch Laboratory
198 Kezhu Road, Scientech Park Guangzhou Economic & Technology Development District, Guangzhou, China 510663 t (86-20)82155555 f (86-20)82075113 www.cn.sgs.com
中国·广州·经济技术开发区科学城科珠路198号 邮编:510663 t (86-20)82155555 f (86-20)82075113 e sgs.china@sgs.com
Member of the SGS Group (SGS SA)

Cu Pillar

SGS

Test Report No. CANEC0900995002 Date: 12 Mar 2009 Page 1 of 4

DONGGUAN JIANG TONG COPPER CO.,LTD
142# TANGQING EAST ROAD HENG-TANG TANGXIA DONGGUAN
CHINA

The following sample(s) was/were submitted and identified on behalf of the clients as :
C1100铜

SGS Job No.	:	11654117 - SZ
Buyer	:	台达，富士康，讯强
SGS Internal Reference No.	:	4.2
Date of Sample Received	:	06 Mar 2009
Testing Period	:	06 Mar 2009 - 12 Mar 2009
Test Requested	:	Selected test(s) as requested by client.
Test Method	:	Please refer to next page(s).
Test Results	:	Please refer to next page(s).

Signed for and on behalf of
SGS-CSTC Ltd.

Huang Fang, Sunny
Sr. Engineer

This document is issued by the Company under its General Conditions of Service printed overleaf or available on request and accessible at http://www.sgs.com/terms_and_conditions.htm. Attention is drawn to the limitation of liability, indemnification and jurisdiction issues defined therein. Any holder of this document is advised that information contained hereon reflects the Company's findings at the time of its intervention only and within the limits of Client's instructions, if any. The Company's sole responsibility is to its Client and this document does not exonerate parties to a transaction from exercising all their rights and obligations under the transaction documents. Any unauthorized alteration, forgery or falsification of the content or appearance of this document is unlawful and offenders may be prosecuted to the fullest extent of the law.
Unless otherwise stated the results shown in this test report refer only to the sample(s) tested. This document cannot be reproduced except in full, without prior approval of the Company.

SGS-CSTC Standards Technical Services Co., Ltd. Guangzhou Testing Services Laboratory
198 Kezhu Road, Scientech Park Guangzhou Economic & Technology Development District, Guangzhou, China 510663 t (86-20)82155555 f (86-20)82075113 www.cn.sgs.com
中国·广州·经济技术开发区科学城科珠路198号 邮编:510663 t (86-20)82155555 f (86-20)82075113 e sgs.china@sgs.com
Member of the SGS Group (SGS SA)

SGS

Test Report No. CANEC0900995002 Date: 12 Mar 2009 Page 2 of 4

Test Results:

ID for specimen 1 : CAN09-009950.002
Description for specimen 1 : Copper-colored metal

Heavy metal(s)

Test Item(s)	Unit	Test Method (Reference)	Result	MDL
Cadmium (Cd)	mg/kg	IEC 62321:2008, ICP-OES	N.D.	2
Lead (Pb)	mg/kg	IEC 62321:2008, ICP-OES	N.D.	2
Mercury (Hg)	mg/kg	IEC 62321:2008, ICP-OES	N.D.	2
Hexavalent Chromium (CrVI) by boiling water extraction	-	IEC 62321:2008, UV-Vis	Negative	◇

Note:
1. mg/kg = ppm
2. N.D. = Not Detected (< MDL)
3. MDL = Method Detection Limit
4. ◇ = Spot-Test:
   Negative = Absence of CrVI coating, Positive = Presence of CrVI coating;
   (The tested sample should be further verified by boiling-water-extraction method if the spot test result is negative or cannot be confirmed.)
   Boiling-water-extraction:
   Negative = Absence of CrVI coating
   Positive = Presence of CrVI coating; the detected concentration in boiling-water-extraction solution is equal or greater than 0.02 mg/kg with 50 cm² sample surface area.
   Storage conditions and production date of the tested sample are unavailable and thus results of Cr(VI) represent status of the sample at the time of testing.
5. "-" = Not regulated

This document is issued by the Company under its General Conditions of Service printed overleaf or available on request and accessible at http://www.sgs.com/terms_and_conditions.htm. Attention is drawn to the limitation of liability, indemnification and jurisdiction issues defined therein. Any holder of this document is advised that information contained hereon reflects the Company's findings at the time of its intervention only and within the limits of Client's instructions, if any. The Company's sole responsibility is to its Client and this document does not exonerate parties to a transaction from exercising all their rights and obligations under the transaction documents. Any unauthorized alteration, forgery or falsification of the content or appearance of this document is unlawful and offenders may be prosecuted to the fullest extent of the law.
Unless otherwise stated the results shown in this test report refer only to the sample(s) tested. This document cannot be reproduced except in full, without prior approval of the Company.

SGS-CSTC Standards Technical Services Co., Ltd. Guangzhou Branch Electrical Laboratory
198 Kezhu Road, Scientech Park Guangzhou Economic & Technology Development District, Guangzhou, China 510663 t (86-20)82155555 f (86-20)82075113 www.cn.sgs.com
中国·广州·经济技术开发区科学城科珠路198号 邮编: 510663 t (86-20)82155555 f (86-20)82075113 e sgs.china@sgs.com

Member of the SGS Group (SGS SA)

SGS

Test Report No. CANEC0900995002 Date: 12 Mar 2009 Page 3 of 4

ATTACHMENTS

Testing Flow Chart

1) Name of the person who made measurement: Luke Xu / Lily Lee
2) Name of the person in charge of measurement: Adams Yu / Leo Wang
3) These samples were dissolved totally by pre-conditioning method according to below flow chart (Cr^{6+} test method excluded) .

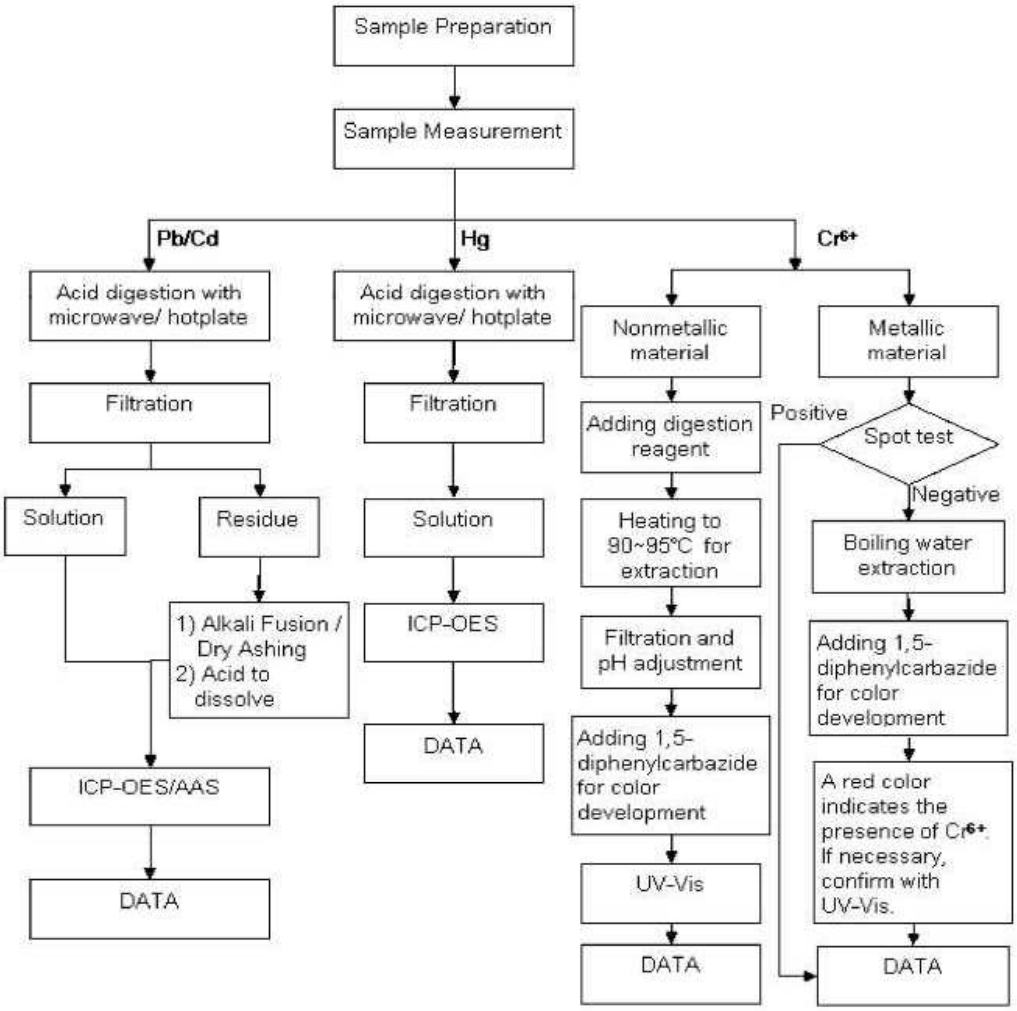

This document is issued by the Company under its General Conditions of Service printed overleaf or available on request and accessible at http://www.sgs.com/terms_and_conditions.htm. Attention is drawn to the limitation of liability, indemnification and jurisdiction issues defined therein. Any holder of this document is advised that information contained hereon reflects the Company's findings at the time of its intervention only and within the limits of Client's instructions, if any. The Company's sole responsibility is to its Client and this document does not exonerate parties to a transaction from exercising all their rights and obligations under the transaction documents. Any unauthorized alteration, forgery or falsification of the content or appearance of this document is unlawful and offenders may be prosecuted to the fullest extent of the law.
Unless otherwise stated the results shown in this test report refer only to the sample(s) tested. This document cannot be reproduced except in full, without prior approval of the Company.

SGS-CSTC Standards Technical Services Co., Ltd. Guangzhou Branch Testing Laboratory
198 Kezhu Road, Scientech Park Guangzhou Economic & Technology Development District, Guangzhou, China 510663 t (86-20)82155555 f (86-20)82075113 www.cn.sgs.com
中国·广州·经济技术开发区科学城科珠路198号 邮编: 510663 t (86-20)82155555 f (86-20)82075113 e sgs.china@sgs.com

Member of the SGS Group (SGS SA)

SGS

Test Report No. CANEC0900995002 Date: 12 Mar 2009 Page 4 of 4

Sample photo:

CAN09-009950.002

SGS authenticate the photo on original report only

*** End of Report ***

This document is issued by the Company under its General Conditions of Service printed overleaf or available on request and accessible at http://www.sgs.com/terms_and_conditions.htm. Attention is drawn to the limitation of liability, indemnification and jurisdiction issues defined therein. Any holder of this document is advised that information contained hereon reflects the Company's findings at the time of its intervention only and within the limits of Client's instructions, if any. The Company's sole responsibility is to its Client and this document does not exonerate parties to a transaction from exercising all their rights and obligations under the transaction documents. Any unauthorized alteration, forgery or falsification of the content or appearance of this document is unlawful and offenders may be prosecuted to the fullest extent of the law.
Unless otherwise stated the results shown in this test report refer only to the sample(s) tested. This document cannot be reproduced except in full, without prior approval of the Company.

SGS-CSTC Standards Technical Services Co., Ltd. Guangzhou Branch Electronic Laboratory
198 Kezhu Road, Scientech Park Guangzhou Economic & Technology Development District, Guangzhou, China 510663 t (86-20)82155555 f (86-20)82075113 www.cn.sgs.com
中国·广州·经济技术开发区科学城科珠路198号 邮编: 510663 t (86-20)82155555 f (86-20)82075113 e sgs.china@sgs.com

Member of the SGS Group (SGS SA)

Foot Rack-SGS

SGS

Test Report No. CANEC0806360601 Date: 18 Nov 2008 Page 1 of 4

KO SHUN CHEONG STEEL COIL CENTRE LIMITED
15/F TIN ON SING COMMERCIAL BUILDING
41-43 GRAHAM STREET
HONG KONG

The following sample(s) was/were submitted and identified on behalf of the clients as :
S50CM

SGS Job No.	:	11431016 - SZ
Date of Sample Received	:	05 Nov 2008
Testing Period	:	05 Nov 2008 - 10 Nov 2008
Test Requested	:	Selected test(s) as requested by client.
Test Method	:	Please refer to next page(s).
Test Results	:	Please refer to next page(s).

Signed for and on behalf of
SGS-CSTC Ltd.

Huang Fang, Sunny
Sr. Engineer

This document is issued by the Company under its General Conditions of Service printed overleaf or available on request and accessible at http://www.sgs.com/terms_and_conditions.htm. Attention is drawn to the limitation of liability, indemnification and jurisdiction issues defined therein. Any holder of this document is advised that information contained hereon reflects the Company's findings at the time of its intervention only and within the limits of Client's instructions, if any. The Company's sole responsibility is to its Client and this document does not exonerate parties to a transaction from exercising all their rights and obligations under the transaction documents. Any unauthorised alteration, forgery or falsification of the content or appearance of this document is unlawful and offenders may be prosecuted to the fullest extent of the law.
Unless otherwise agreed, the results shown in this test report refer only to the sample(s) tested. This document cannot be reproduced except in full, without prior approval of the Company.

GZCM 2498152

19 Kezhu Road, Scientific Park Guangzhou Economic & Technology Development District, Guangzhou, China 510663 t (86-20)82155555 f (86-20)82075113 www.cn.sgs.com
中国·广州·经济技术开发区科学城科珠路198号 邮编: 510663 t (86-20)82155555 f (86-20)82075113 e sgs.china@sgs.com

Member of the SGS Group (SGS SA)

SGS

Test Report No. CANEC0806360601 Date: 18 Nov 2008 Page 2 of 4

Test Results:

ID for specimen 1 : CAN08-063606.001
Description for specimen 1 : Silver-gray metal sheet

Heavy metal(s)

Test Item(s)	Unit	Test Method (Reference)	Result	MDL
Cadmium (Cd)	mg/kg	IEC 62321/2nd CDV (111/95/CDV), ICP-OES	N.D.	2
Lead (Pb)	mg/kg	IEC 62321/2nd CDV (111/95/CDV), ICP-OES	N.D.	2
Mercury (Hg)	mg/kg	IEC 62321/2nd CDV (111/95/CDV), ICP-OES	N.D.	2
Hexavalent Chromium (CrVI) by boiling water extraction	-	IEC 62321/2nd CDV (111/95/CDV), UV-Vis	Negative	◇

Note:
1. mg/kg = ppm
2. N.D. = Not Detected (< MDL)
3. MDL = Method Detection Limit
4. ◇ = Spot-Test:
   Negative = Absence of CrVI coating, Positive = Presence of CrVI coating;
   (The tested sample should be further verified by boiling-water-extraction method if the spot test result is negative or cannot be confirmed.)
   Boiling-water-extraction:
   Negative = Absence of CrVI coating
   Positive = Presence of CrVI coating; the detected concentration in boiling-water-extraction solution is equal or greater than 0.02 mg/kg with 50 cm² sample surface area.
5. "-" = Not regulated

Remark: Results & photo(s) of this report refer to test report CANEC0806071701.

QA PASS

This document is issued by the Company under its General Conditions of Service printed overleaf or available on request and accessible at http://www.sgs.com/terms_and_conditions.htm. Attention is drawn to the limitation of liability, indemnification and jurisdiction issues defined therein. Any holder of this document is advised that information contained hereon reflects the Company's findings at the time of its intervention only and within the limits of Client's instructions, if any. The Company's sole responsibility is to its Client and this document does not exempt parties to a transaction from exercising all their rights and obligations under the transaction documents. Any unauthorized alteration, forgery or falsification of the content or appearance of this document is unlawful and offenders may be prosecuted to the fullest extent of the law. Unless otherwise stated the results shown in this test report refer only to the sample(s) tested. This document cannot be reproduced except in full, without prior approval of the Company.

SGS

GZCM 2498153

Member of the SGS Group (SGS SA)

SGS

Test Report

No. CANEC0806360601 Date: 18 Nov 2008 Page 3 of 4

ATTACHMENTS

Testing Flow Chart

1) Name of the person who made measurement: Bowen Chen
2) Name of the person in charge of measurement: Adams Yu
3) These samples were dissolved totally by pre-conditioning method according to below flow chart (Cr^{6+} test method excluded).

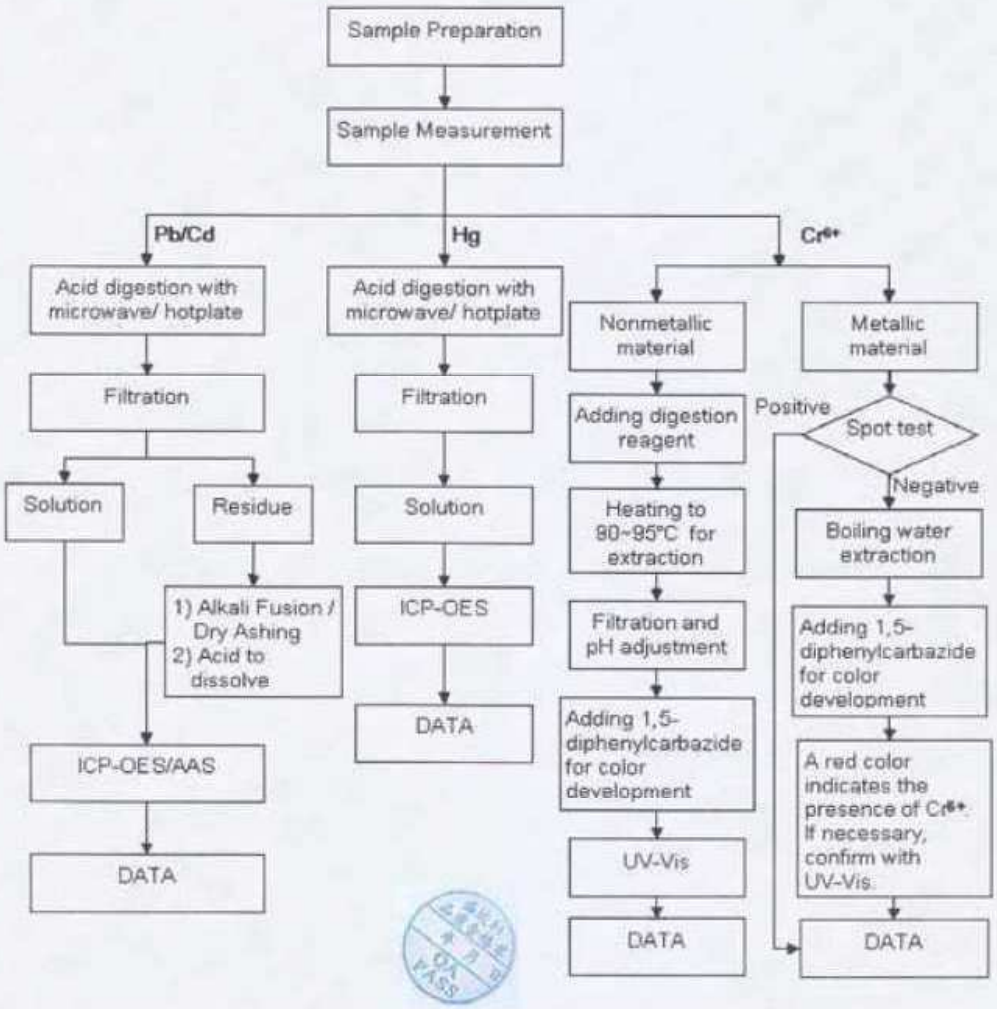

This document is issued by the Company under its General Conditions of Service printed overleaf or available on request and accessible at http://www.sgs.com/terms_and_conditions.htm. Attention is drawn to the limitation of liability, indemnification and jurisdiction issues defined therein. Any holder of this document is advised that information contained hereon reflects the Company's findings at the time of its intervention only and within the limits of Client's instructions, if any. The Company's sole responsibility is to its Client and this document does not exonerate parties to a transaction from exercising all their rights and obligations under the transaction documents. Any unauthorized alteration, forgery or falsification of the content or appearance of this document is unlawful and offenders may be prosecuted to the fullest extent of the law. Unless otherwise agreed, the results shown in this test report refer only to the sample(s) tested. This document cannot be reproduced except in full, without prior approval of the Company.

GZCM 2498154

SGS-CSTC Standards Technical Services (Guangzhou) Co., Ltd.
No.198 Kezhu Road, Scientific Park Guangzhou Economic & Technical Development District, Guangzhou, China 510663 t (86-20)82155555 f (86-20)82075113 www.cn.sgs.com
中国·广州·经济技术开发区科学城科珠路198号 邮编:510663 t (86-20)82155555 f (86-20)82075113 e sgs.china@sgs.com

Member of the SGS Group (SGS SA)

SGS

Test Report

No. CANEC0806360601 Date: 18 Nov 2008 Page 4 of 4

Sample photo:

CAN08-063606.001

SGS authenticate the photo on original report only

*** End of Report ***

This document is issued by the Company under its General Conditions of Service printed overleaf or available on request and accessible at http://www.sgs.com/terms_and_conditions.htm. Attention is drawn to the limitation of liability, indemnification and jurisdiction issues defined therein. Any holder of this document is advised that information contained hereon reflects the Company's findings at the time of its intervention only and within the limits of Client's instructions, if any. The Company's sole responsibility is to its Client and this document does not exonerate parties to a transaction from exercising all their rights and obligations under the transaction documents. Any unauthorized alteration, forgery or falsification of the content or appearance of this document is unlawful and offenders may be prosecuted to the fullest extent of the law. Unless otherwise agreed, the results shown in this test report refer only to the sample(s) tested. This document cannot be reproduced except in full, without prior approval of the Company.

GZCM 2498155

Member of the SGS Group (SGS SA)

SGS

Test Report No. CANEC0904038001 Date: 05 Aug 2009 Page 1 of 4

DONGGUAN CITY HUMEN LIANPEI HARDWARE PROCESS FACTORY
FENGHUANGSHAN INDUSTRIAL DISTRICT SHAJIAO HUMEN TOWN DONGGUAN CITY GUANGDONG PROVINCE
CHINA

The following sample(s) was/were submitted and identified on behalf of the clients as :
五金件

SGS Job No.	:	12069193 - GZ
Client Reference Information	:	环保螺
Date of Sample Received	:	03 Aug 2009
Testing Period	:	03 Aug 2009 - 05 Aug 2009
Test Requested	:	Selected test(s) as requested by client.
Test Method	:	Please refer to next page(s).
Test Results	:	Please refer to next page(s).
Conclusion	:	Based on the performed tests on submitted sample(s), the results **comply with** the RoHS Directive 2002/95/EC and its subsequent amendments.

Signed for and on behalf of
SGS-CSTC Ltd.

Sunny Huang
Lab Sr. Supervisor

This document is issued by the Company under its General Conditions of Service printed overleaf or available on request and accessible at http://www.sgs.com/terms_and_conditions.htm. Attention is drawn to the limitation of liability, indemnification and jurisdiction issues defined therein. Any holder of this document is advised that information contained hereon reflects the Company's findings at the time of its intervention only and within the limits of Client's instructions, if any. The Company's sole responsibility is to its Client and this document does not exonerate parties to a transaction from exercising all their rights and obligations under the transaction documents. Any unauthorized alteration, forgery or falsification of the content or appearance of this document is unlawful and offenders may be prosecuted to the fullest extent of the law.
Unless otherwise stated the results shown in this test report refer only to the sample(s) tested. This document cannot be reproduced except in full, without prior approval of the Company.

SGS-CSTC Standards Technical Services Co., Ltd. Guangzhou Branch Testing Laboratory
198 Kezhu Road, Scientech Park Guangzhou Economic & Technology Development District, Guangzhou, China 510663 t (86-20)82155555 f (86-20)82075113 www.cn.sgs.com
中国·广州·经济技术开发区科学城科珠路198号 邮编: 510663 t (86-20)82155555 f (86-20)82075113 e sgs.china@sgs.com

Member of the SGS Group (SGS SA)

SGS

Test Report No. CANEC0904038001 Date: 05 Aug 2009 Page 2 of 4

Test Results:

ID for specimen 1 : CAN09-040380.001
Description for specimen 1 : Silver-grey plated metal

RoHS Directive 2002/95/EC

Test Item(s)	Unit	Test Method (Reference)	Result	MDL	Limit
Cadmium (Cd)	mg/kg	IEC 62321:2008, ICP-OES	N.D.	2	100
Lead (Pb)	mg/kg	IEC 62321:2008, ICP-OES	N.D.	2	1000
Mercury (Hg)	mg/kg	IEC 62321:2008, ICP-OES	N.D.	2	1000
Hexavalent Chromium (CrVI) by boiling water extraction	-	IEC 62321:2008, UV-Vis	Negative	◇	#

Note:
1. mg/kg = ppm
2. N.D. = Not Detected (< MDL)
3. MDL = Method Detection Limit
4. ◇ = Spot-Test:
   Negative = Absence of CrVI coating, Positive = Presence of CrVI coating;
   (The tested sample should be further verified by boiling-water-extraction method if the spot test result is negative or cannot be confirmed.)
   Boiling-water-extraction:
   Negative = Absence of CrVI coating
   Positive = Presence of CrVI coating; the detected concentration in boiling-water-extraction solution is equal or greater than 0.02 mg/kg with 50 cm² sample surface area.
   Storage conditions and production date of the tested sample are unavailable and thus results of Cr(VI) represent status of the sample at the time of testing.
5. # = Positive indicates the presence of CrVI on the tested areas.
   Negative indicates the absence of CrVI on the tested areas.
6. "- " = Not regulated

This document is issued by the Company under its General Conditions of Service printed overleaf or available on request and accessible at http://www.sgs.com/terms_and conditions.htm. Attention is drawn to the limitation of liability, indemnification and jurisdiction issues defined therein. Any holder of this document is advised that information contained hereon reflects the Company's findings at the time of its intervention only and within the limits of Client's instructions, if any. The Company's sole responsibility is to its Client and this document does not exonerate parties to a transaction from exercising all their rights and obligations under the transaction documents. Any unauthorized alteration, forgery or falsification of the content or appearance of this document is unlawful and offenders may be prosecuted to the fullest extent of the law.
Unless otherwise stated the results shown in this test report refer only to the sample(s) tested. This document cannot be reproduced except in full, without prior approval of the Company.

198 Kezhu Road, Scientech Park Guangzhou Economic & Technology Development District, Guangzhou, China 510663 t (86-20)82155555 f (86-20)82075113 www.cn.sgs.com
中国·广州·经济技术开发区科学城科珠路198号 邮编: 510663 t (86-20)82155555 f (86-20)82075113 e sgs.china@sgs.com

Member of the SGS Group (SGS SA)

SGS

Test Report No. CANEC0904038001 Date: 05 Aug 2009 Page 3 of 4

ATTACHMENTS

Testing Flow Chart

1) Name of the person who made measurement: Luke Xu / Lily Lee
2) Name of the person in charge of measurement: Adams Yu / Leo Wang
3) These samples were dissolved totally by pre-conditioning method according to below flow chart (Cr^{6+} test method excluded) .

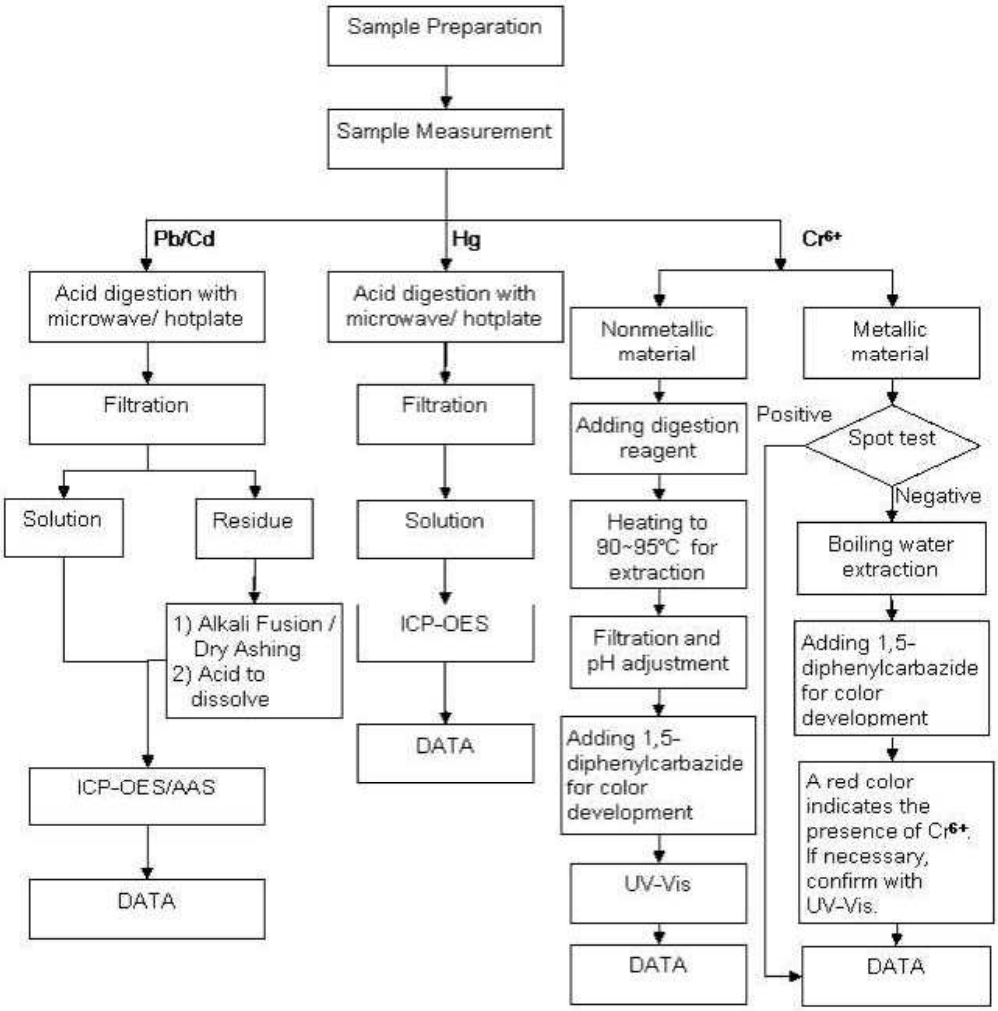

This document is issued by the Company under its General Conditions of Service printed overleaf or available on request and accessible at http://www.sgs.com/terms_and_conditions.htm. Attention is drawn to the limitation of liability, indemnification and jurisdiction issues defined therein. Any holder of this document is advised that information contained hereon reflects the Company's findings at the time of its intervention only and within the limits of Client's instructions, if any. The Company's sole responsibility is to its Client and this document does not exonerate parties to a transaction from exercising all their rights and obligations under the transaction documents. Any unauthorized alteration, forgery or falsification of the content or appearance of this document is unlawful and offenders may be prosecuted to the fullest extent of the law.
Unless otherwise stated the results shown in this test report refer only to the sample(s) tested. This document cannot be reproduced except in full, without prior approval of the Company.

198 Kezhu Road, Scientech Park Guangzhou Economic & Technology Development District, Guangzhou, China 510663 t (86-20)82155555 f (86-20)82075113 www.cn.sgs.com
中国·广州·经济技术开发区科学城科珠路198号 邮编: 510663 t (86-20)82155555 f (86-20)82075113 e sgs.china@sgs.com

Member of the SGS Group (SGS SA)

SGS

Test Report No. CANEC0904038001 Date: 05 Aug 2009 Page 4 of 4

Sample photo:

CAN09-040380.001

SGS authenticate the photo on original report only

*** End of Report ***

This document is issued by the Company under its General Conditions of Service printed overleaf or available on request and accessible at http://www.sgs.com/terms_and_conditions.htm. Attention is drawn to the limitation of liability, indemnification and jurisdiction issues defined therein. Any holder of this document is advised that information contained hereon reflects the Company's findings at the time of its intervention only and within the limits of Client's instructions, if any. The Company's sole responsibility is to its Client and this document does not exonerate parties to a transaction from exercising all their rights and obligations under the transaction documents. Any unauthorized alteration, forgery or falsification of the content or appearance of this document is unlawful and offenders may be prosecuted to the fullest extent of the law.
Unless otherwise stated the results shown in this test report refer only to the sample(s) tested. This document cannot be reproduced except in full, without prior approval of the Company.

198 Kezhu Road, Scientech Park Guangzhou Economic & Technology Development District, Guangzhou, China 510663 t (86-20)82155555 f (86-20)82075113 www.cn.sgs.com
中国·广州·经济技术开发区科学城科珠路198号 邮编: 510663 t (86-20)82155555 f (86-20)82075113 e sgs.china@sgs.com

Member of the SGS Group (SGS SA)

Screw-SGS

SGS

Test Report No. CANEC0902262804 Date: 07 May 2009 Page 1 of 5

DONG GUAN QUAN CHENG METAL CO., LTD
YANG WU VILLAGE DALANG TOWN DONG GUAN CITY GUANG DONG
CHINA

The following sample(s) was/were submitted and identified on behalf of the clients as :
1018

SGS Job No.	:	11779910 - SZ
SGS Internal Reference No.	:	6.4
Date of Sample Received	:	30 Apr 2009
Testing Period	:	30 Apr 2009 - 06 May 2009
Test Requested	:	Selected test(s) as requested by client.
Test Method	:	Please refer to next page(s).
Test Results	:	Please refer to next page(s).

Signed for and on behalf of
SGS-CSTC Ltd.

Sunny Huang
Lab Sr. Supervisor

This document is issued by the Company under its General Conditions of Service printed overleaf or available on request and accessible at http://www.sgs.com/terms_and_conditions.htm. Attention is drawn to the limitation of liability, indemnification and jurisdiction issues defined therein. Any holder of this document is advised that information contained hereon reflects the Company's findings at the time of its intervention only and within the limits of Client's instructions, if any. The Company's sole responsibility is to its Client and this document does not exonerate parties to a transaction from exercising all their rights and obligations under the transaction documents. Any unauthorized alteration, forgery or falsification of the content or appearance of this document is unlawful and offenders may be prosecuted to the fullest extent of the law.
Unless otherwise stated the results shown in this test report refer only to the sample(s) tested. This document cannot be reproduced except in full, without prior approval of the Company.

SGS-CSTC Standards Technical Services Co., Ltd. Guangzhou Branch Testing Laboratory
198 Kezhu Road, Scientech Park Guangzhou Economic & Technology Development District, Guangzhou, China 510663 t (86-20)82155555 f (86-20)82075113 www.cn.sgs.com
中国·广州·经济技术开发区科学城科珠路198号 邮编:510663 t (86-20)82155555 f (86-20)82075113 e sgs.china@sgs.com

Member of the SGS Group (SGS SA)

SGS

Test Report No. CANEC0902262804 Date: 07 May 2009 Page 2 of 5

Test Results:

ID for specimen 1 : CAN09-022628.004
Description for specimen 1 : Silver-gray metal wire

Elementary Analysis

Test Item(s)	Unit	Test Method (Reference)	Result	MDL
Cadmium (Cd)	mg/kg	IEC 62321:2008, ICP-OES	N.D.	2
Lead (Pb)	mg/kg	IEC 62321:2008, ICP-OES	N.D.	2
Mercury (Hg)	mg/kg	IEC 62321:2008, ICP-OES	N.D.	2
Hexavalent Chromium (CrVI) by boiling water extraction	-	IEC 62321:2008, UV-Vis	Negative	◇

Note:
1. mg/kg = ppm
2. N.D. = Not Detected (< MDL)
3. MDL = Method Detection Limit
4. ◇ = Spot-Test:
   Negative = Absence of CrVI coating, Positive = Presence of CrVI coating;
   (The tested sample should be further verified by boiling-water-extraction method if the spot test result is negative or cannot be confirmed.)
   Boiling-water-extraction:
   Negative = Absence of CrVI coating
   Positive = Presence of CrVI coating; the detected concentration in boiling-water-extraction solution is equal or greater than 0.02 mg/kg with 50 cm² sample surface area.
   Storage conditions and production date of the tested sample are unavailable and thus results of Cr(VI) represent status of the sample at the time of testing.
5. "-" = Not regulated

PFOA & PFOS (Perfluorooctanoic acid & Perfluorooctane sulfonates)

Test Item(s)	Unit	Test Method (Reference)	Result	MDL
Perfluorooctanoic acid (PFOA)	mg/kg	EPA 3550C: 2007, LC-MS	N.D.	10
Perfluorooctane sulfonates (PFOS) PFOS Acid PFOS Metal Salt PFOS Amide	mg/kg	EPA 3550C: 2007, LC-MS	N.D.	10

Note:
1. mg/kg = ppm
2. N.D. = Not Detected (< MDL)
3. MDL = Method Detection Limit

Reference Information: Directive 2006/122/EC

This document is issued by the Company under its General Conditions of Service printed overleaf or available on request and accessible at http://www.sgs.com/terms_and_conditions.htm. Attention is drawn to the limitation of liability, indemnification and jurisdiction issues defined therein. Any holder of this document is advised that information contained hereon reflects the Company's findings at the time of its intervention only and within the limits of Client's instructions, if any. The Company's sole responsibility is to its Client and this document does not exonerate parties to a transaction from exercising all their rights and obligations under the transaction documents. Any unauthorized alteration, forgery or falsification of the content or appearance of this document is unlawful and offenders may be prosecuted to the fullest extent of the law.
Unless otherwise stated the results shown in this test report refer only to the sample(s) tested. This document cannot be reproduced except in full, without prior approval of the Company.

SGS-CSTC Standards Technical Services Co., Ltd. Guangzhou Branch Testing Laboratory
198 Kezhu Road, Scientech Park Guangzhou Economic & Technology Development District, Guangzhou, China 510663 t (86-20)82155555 f (86-20)82075113 www.cn.sgs.com
中国·广州·经济技术开发区科学城科珠路198号 邮编: 510663 t (86-20)82155555 f (86-20)82075113 e sgs.china@sgs.com

SGS

Test Report No. CANEC0902262804 Date: 07 May 2009 Page 3 of 5

(1) May not be placed on the market or used as a substance or constituent of preparations in a concentration equal to or higher than 0.005 % by mass.
(2) May not be placed on the market in semi-finished products or articles, or parts thereof, if the concentration of PFOS is equal to or higher than 0.1 % by mass calculated with reference to the mass of structurally or microstructurally distinct parts that contain PFOS or, for textiles or other coated materials, if the amount of PFOS is equal to or higher than 1μg /m² of the coated material.

This document is issued by the Company under its General Conditions of Service printed overleaf or available on request and accessible at http://www.sgs.com/terms_and_conditions.htm. Attention is drawn to the limitation of liability, indemnification and jurisdiction issues defined therein. Any holder of this document is advised that information contained hereon reflects the Company's findings at the time of its intervention only and within the limits of Client's instructions, if any. The Company's sole responsibility is to its Client and this document does not exonerate parties to a transaction from exercising all their rights and obligations under the transaction documents. Any unauthorized alteration, forgery or falsification of the content or appearance of this document is unlawful and offenders may be prosecuted to the fullest extent of the law.
Unless otherwise stated the results shown in this test report refer only to the sample(s) tested. This document cannot be reproduced except in full, without prior approval of the Company.

SGS-CSTC Standards Technical Services Co., Ltd. Guangzhou Branch (Guangzhou Testing Laboratory)
198 Kezhu Road, Scientech Park Guangzhou Economic & Technology Development District, Guangzhou, China 510663 t (86-20)82155555 f (86-20)82075113 www.cn.sgs.com
中国·广州·经济技术开发区科学城科珠路198号 邮编: 510663 t (86-20)82155555 f (86-20)82075113 e sgs.china@sgs.com

SGS

Test Report No. CANEC0902262804 Date: 07 May 2009 Page 4 of 5

ATTACHMENTS

Testing Flow Chart

1) Name of the person who made measurement: Luke Xu / Lily Lee
2) Name of the person in charge of measurement: Adams Yu / Leo Wang

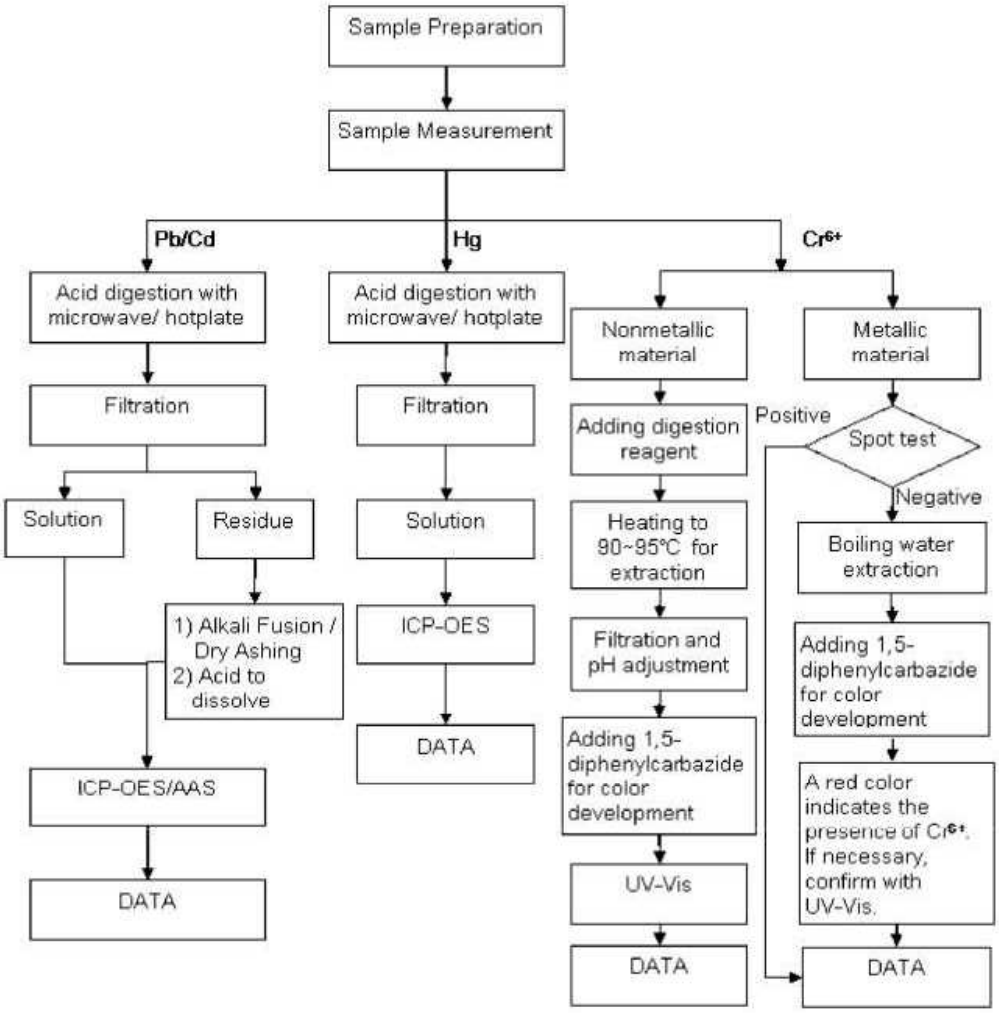

This document is issued by the Company under its General Conditions of Service printed overleaf or available on request and accessible at http://www.sgs.com/terms_and_conditions.htm. Attention is drawn to the limitation of liability, indemnification and jurisdiction issues defined therein. Any holder of this document is advised that information contained hereon reflects the Company's findings at the time of its intervention only and within the limits of Client's instructions, if any. The Company's sole responsibility is to its Client and this document does not exonerate parties to a transaction from exercising all their rights and obligations under the transaction documents. Any unauthorized alteration, forgery or falsification of the content or appearance of this document is unlawful and offenders may be prosecuted to the fullest extent of the law.
Unless otherwise stated the results shown in this test report refer only to the sample(s) tested. This document cannot be reproduced except in full, without prior approval of the Company.

SGS-CSTC Standards Technical Services Co., Ltd. Guangzhou Branch
198 Kezhu Road, Scientech Park Guangzhou Economic & Technology Development District, Guangzhou, China 510663 t (86-20)82155555 f (86-20)82075113 www.cn.sgs.com
中国·广州·经济技术开发区科学城科珠路198号 邮编: 510663 t (86-20)82155555 f (86-20)82075113 e sgs.china@sgs.com

SGS

Test Report No. CANEC0902262804 Date: 07 May 2009 Page 5 of 5

Sample photo:

CAN09-022628.004

SGS authenticate the photo on original report only

*** End of Report ***

This document is issued by the Company under its General Conditions of Service printed overleaf or available on request and accessible at http://www.sgs.com/terms_and_conditions.htm. Attention is drawn to the limitation of liability, indemnification and jurisdiction issues defined therein. Any holder of this document is advised that information contained hereon reflects the Company's findings at the time of its intervention only and within the limits of Client's instructions, if any. The Company's sole responsibility is to its Client and this document does not exonerate parties to a transaction from exercising all their rights and obligations under the transaction documents. Any unauthorized alteration, forgery or falsification of the content or appearance of this document is unlawful and offenders may be prosecuted to the fullest extent of the law.
Unless otherwise stated the results shown in this test report refer only to the sample(s) tested. This document cannot be reproduced except in full, without prior approval of the Company.

SGS-CSTC Standards Technical Services Co., Ltd. Guangzhou Branch (Textile Services Laboratory)
198 Kezhu Road, Scientech Park Guangzhou Economic & Technology Development District, Guangzhou, China 510663 t (86-20)82155555 f (86-20)82075113 www.cn.sgs.com
中国·广州·经济技术开发区科学城科珠路198号 邮编: 510663 t (86-20)82155555 f (86-20)82075113 e sgs.china@sgs.com

SGS

Test Report No. CANEC0902460801 Date: 18 May 2009 Page 1 of 5

BO LUO HENG FA HARDWARE PLASTICS SURFACE HANDLES LIMITED COMPANY
BEIDI VILLAGE,LONGHUA TOWN,BOLUO HUIZHOU CITY,GUANGDONG
CHINA

The following sample(s) was/were submitted and identified on behalf of the clients as :
环保镍

SGS Job No.	:	11808143 - SZ
SGS Internal Reference No.	:	3.1
Date of Sample Received	:	12 May 2009
Testing Period	:	12 May 2009 - 18 May 2009
Test Requested	:	Selected test(s) as requested by client.
Test Method	:	Please refer to next page(s).
Test Results	:	Please refer to next page(s).

Signed for and on behalf of
SGS-CSTC Ltd.

Sunny Huang
Lab Sr. Supervisor

This document is issued by the Company under its General Conditions of Service printed overleaf or available on request and accessible at http://www.sgs.com/terms_and_conditions.htm. Attention is drawn to the limitation of liability, indemnification and jurisdiction issues defined therein. Any holder of this document is advised that information contained hereon reflects the Company's findings at the time of its intervention only and within the limits of Client's instructions, if any. The Company's sole responsibility is to its Client and this document does not exonerate parties to a transaction from exercising all their rights and obligations under the transaction documents. Any unauthorized alteration, forgery or falsification of the content or appearance of this document is unlawful and offenders may be prosecuted to the fullest extent of the law.
Unless otherwise stated the results shown in this test report refer only to the sample(s) tested. This document cannot be reproduced except in full, without prior approval of the Company.

SGS-CSTC Standards Technical Services Co., Ltd. Guangzhou Branch Testing Laboratory
198 Kezhu Road, Scientech Park Guangzhou Economic & Technology Development District, Guangzhou, China 510663 t (86-20)82155555 f (86-20)82075113 www.cn.sgs.com
中国·广州·经济技术开发区科学城科珠路198号 邮编: 510663 t (86-20)82155555 f (86-20)82075113 e sgs.china@sgs.com

SGS

Test Report No. CANEC0902460801 Date: 18 May 2009 Page 2 of 5

Test Results:

ID for specimen 1 : CAN09-024608.001
Description for specimen 1 : Silver-grey plated metal screw

Elementary Analysis

Test Item(s)	Unit	Test Method (Reference)	Result	MDL
Cadmium (Cd)	mg/kg	IEC 62321:2008, ICP-OES	N.D.	2
Lead (Pb)	mg/kg	IEC 62321:2008, ICP-OES	N.D.	2
Mercury (Hg)	mg/kg	IEC 62321:2008, ICP-OES	N.D.	2
Hexavalent Chromium (CrVI) by boiling water extraction	-	IEC 62321:2008, UV-Vis	Negative	◇

Note:
1. mg/kg = ppm
2. N.D. = Not Detected (< MDL)
3. MDL = Method Detection Limit
4. ◇ = Spot-Test:
   Negative = Absence of CrVI coating, Positive = Presence of CrVI coating;
   (The tested sample should be further verified by boiling-water-extraction method if the spot test result is negative or cannot be confirmed.)
   Boiling-water-extraction:
   Negative = Absence of CrVI coating
   Positive = Presence of CrVI coating; the detected concentration in boiling-water-extraction solution is equal or greater than 0.02 mg/kg with 50 cm² sample surface area.
   Storage conditions and production date of the tested sample are unavailable and thus results of Cr(VI) represent status of the sample at the time of testing.
5. "-" = Not regulated

PFOA & PFOS (Perfluorooctanoic acid & Perfluorooctane sulfonates)

Test Item(s)	Unit	Test Method (Reference)	Result	MDL
Perfluorooctanoic acid (PFOA)	μg/m²	EPA 3550C: 2007, LC-MS	N.D.	1
Perfluorooctane sulfonates (PFOS) PFOS Acid PFOS Metal Salt PFOS Amide	μg/m²	EPA 3550C: 2007, LC-MS	N.D.	1

Note:
1. mg/kg = ppm
2. N.D. = Not Detected (< MDL)
3. MDL = Method Detection Limit

This document is issued by the Company under its General Conditions of Service printed overleaf or available on request and accessible at http://www.sgs.com/terms_and_conditions.htm. Attention is drawn to the limitation of liability, indemnification and jurisdiction issues defined therein. Any holder of this document is advised that information contained hereon reflects the Company's findings at the time of its intervention only and within the limits of Client's instructions, if any. The Company's sole responsibility is to its Client and this document does not exonerate parties to a transaction from exercising all their rights and obligations under the transaction documents. Any unauthorized alteration, forgery or falsification of the content or appearance of this document is unlawful and offenders may be prosecuted to the fullest extent of the law.
Unless otherwise stated the results shown in this test report refer only to the sample(s) tested. This document cannot be reproduced except in full, without prior approval of the Company.

SGS-CSTC Standards Technical Services Co., Ltd. Guangzhou Branch Testing Laboratory
198 Kezhu Road, Scientech Park Guangzhou Economic & Technology Development District, Guangzhou, China 510663 t (86-20)82155555 f (86-20)82075113 www.cn.sgs.com
中国·广州·经济技术开发区科学城科珠路198号 邮编: 510663 t (86-20)82155555 f (86-20)82075113 e sgs.china@sgs.com

SGS

Test Report No. CANEC0902460801 Date: 18 May 2009 Page 3 of 5

Reference Information: Directive 2006/122/EC
(1) May not be placed on the market or used as a substance or constituent of preparations in a concentration equal to or higher than 0.005 % by mass.
(2) May not be placed on the market in semi-finished products or articles, or parts thereof, if the concentration of PFOS is equal to or higher than 0.1 % by mass calculated with reference to the mass of structurally or microstructurally distinct parts that contain PFOS or, for textiles or other coated materials, if the amount of PFOS is equal to or higher than 1μg /m² of the coated material.

This document is issued by the Company under its General Conditions of Service printed overleaf or available on request and accessible at http://www.sgs.com/terms_and_conditions.htm. Attention is drawn to the limitation of liability, indemnification and jurisdiction issues defined therein. Any holder of this document is advised that information contained hereon reflects the Company's findings at the time of its intervention only and within the limits of Client's instructions, if any. The Company's sole responsibility is to its Client and this document does not exonerate parties to a transaction from exercising all their rights and obligations under the transaction documents. Any unauthorized alteration, forgery or falsification of the content or appearance of this document is unlawful and offenders may be prosecuted to the fullest extent of the law.
Unless otherwise stated the results shown in this test report refer only to the sample(s) tested. This document cannot be reproduced except in full, without prior approval of the Company.

SGS-CSTC Standards Technical Services Co., Ltd. Guangzhou Science & Technology Laboratory
198 Kezhu Road, Scientech Park Guangzhou Economic & Technology Development District, Guangzhou, China 510663 t (86-20)82155555 f (86-20)82075113 www.cn.sgs.com
中国·广州·经济技术开发区科学城科珠路198号 邮编: 510663 t (86-20)82155555 f (86-20)82075113 e sgs.china@sgs.com

SGS

Test Report No. CANEC0902460801 Date: 18 May 2009 Page 4 of 5

ATTACHMENTS

Testing Flow Chart

1) Name of the person who made measurement: Luke Xu / Lily Lee
2) Name of the person in charge of measurement: Adams Yu / Leo Wang

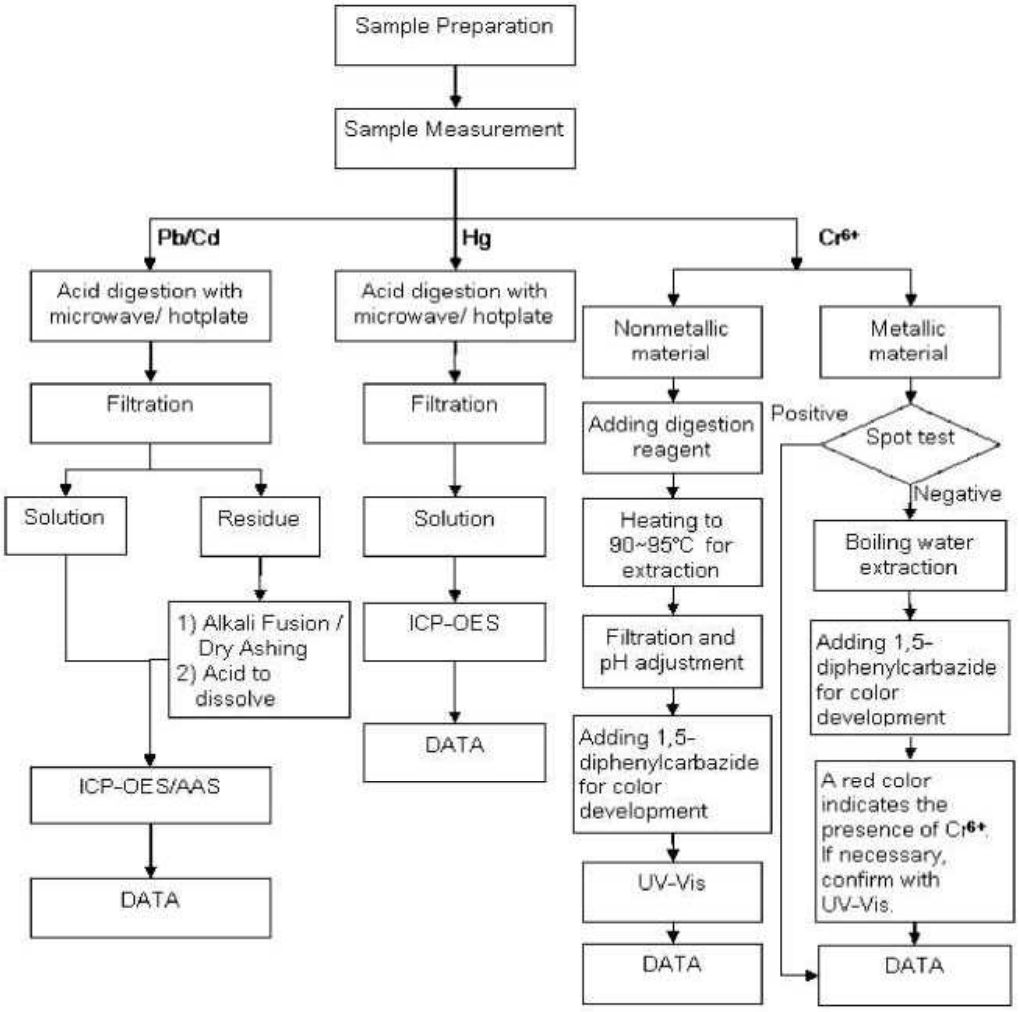

This document is issued by the Company under its General Conditions of Service printed overleaf or available on request and accessible at http://www.sgs.com/terms_and_conditions.htm. Attention is drawn to the limitation of liability, indemnification and jurisdiction issues defined therein. Any holder of this document is advised that information contained hereon reflects the Company's findings at the time of its intervention only and within the limits of Client's instructions, if any. The Company's sole responsibility is to its Client and this document does not exonerate parties to a transaction from exercising all their rights and obligations under the transaction documents. Any unauthorized alteration, forgery or falsification of the content or appearance of this document is unlawful and offenders may be prosecuted to the fullest extent of the law.
Unless otherwise stated the results shown in this test report refer only to the sample(s) tested. This document cannot be reproduced except in full, without prior approval of the Company.

SGS-CSTC Standards Technical Services Co., Ltd. Guangzhou Science & Technology Laboratory
198 Kezhu Road, Scientech Park Guangzhou Economic & Technology Development District, Guangzhou, China 510663 t (86-20)82155555 f (86-20)82075113 www.cn.sgs.com
中国・广州・经济技术开发区科学城科珠路198号 邮编: 510663 t (86-20)82155555 f (86-20)82075113 e sgs.china@sgs.com

SGS

Test Report No. CANEC0902460801 Date: 18 May 2009 Page 5 of 5

Sample photo:

CAN09-024608.001

SGS authenticate the photo on original report only

*** End of Report ***

This document is issued by the Company under its General Conditions of Service printed overleaf or available on request and accessible at http://www.sgs.com/terms_and_conditions.htm. Attention is drawn to the limitation of liability, indemnification and jurisdiction issues defined therein. Any holder of this document is advised that information contained hereon reflects the Company's findings at the time of its intervention only and within the limits of Client's instructions, if any. The Company's sole responsibility is to its Client and this document does not exonerate parties to a transaction from exercising all their rights and obligations under the transaction documents. Any unauthorized alteration, forgery or falsification of the content or appearance of this document is unlawful and offenders may be prosecuted to the fullest extent of the law.
Unless otherwise stated the results shown in this test report refer only to the sample(s) tested. This document cannot be reproduced except in full, without prior approval of the Company.

SGS-CSTC Standards Technical Services Co., Ltd. Guangzhou Science & Technology Laboratory
198 Kezhu Road, Scientech Park Guangzhou Economic & Technology Development District, Guangzhou, China 510663 t (86-20)82155555 f (86-20)82075113 www.cn.sgs.com
中国·广州·经济技术开发区科学城科珠路198号 邮编: 510663 t (86-20)82155555 f (86-20)82075113 e sgs.china@sgs.com

Spring-SGS

SGS

Test Report No. CANEC0905333602 Date: 31 Oct 2009 Page 1 of 4

SHEN ZHEN XIN TAO METAL CO., LTD.
NO.2, LANE 7, XIN HE XI, FU YONG, BAOAN, SHENZHEN, GUANGDONG, CHINA

The following sample(s) was/were submitted and identified on behalf of the clients as :
WOTY PIANO WIRE

SGS Job No.	:	12229464 - SZ
SGS Internal Reference No.	:	2.2
Date of Sample Received	:	28 Oct 2009
Testing Period	:	28 Oct 2009 - 31 Oct 2009
Test Requested	:	Selected test(s) as requested by client.
Test Method	:	Please refer to next page(s).
Test Results	:	Please refer to next page(s).
Conclusion	:	Based on the performed tests on submitted sample(s), the results comply with the RoHS Directive 2002/95/EC and its subsequent amendments.

Signed for and on behalf of
SGS-CSTC Ltd.

Manson Yang
Sr. Engineer

Member of the SGS Group (SGS SA)

SGS

Test Report No. CANEC0905333602 Date: 31 Oct 2009 Page 2 of 4

Test Results:

ID for specimen 1 : CAN09-053336.002
Description for specimen 1 : Silver-grey metal wire

RoHS Directive 2002/95/EC

Test Item(s)	Unit	Test Method (Reference)	Result	MDL	Limit
Cadmium (Cd)	mg/kg	IEC 62321:2008, ICP-OES	N.D.	2	100
Lead (Pb)	mg/kg	IEC 62321:2008, ICP-OES	N.D.	2	1000
Mercury (Hg)	mg/kg	IEC 62321:2008, ICP-OES	N.D.	2	1000
Hexavalent Chromium (CrVI) by boiling water extraction	-	IEC 62321:2008, UV-Vis	Negative	○	#

Note:
1. mg/kg = ppm
2. N.D. = Not Detected (< MDL)
3. MDL = Method Detection Limit
4. ○ = Spot-Test:
   Negative = Absence of CrVI coating; Positive = Presence of CrVI coating;
   (The tested sample should be further verified by boiling-water-extraction method if the spot test result is negative or cannot be confirmed.)
   Boiling-water-extraction:
   Negative = Absence of CrVI coating
   Positive = Presence of CrVI coating; the detected concentration in boiling-water-extraction solution is equal or greater than 0.02 mg/kg with 50 cm^2 sample surface area.
   Storage conditions and production date of the tested sample are unavailable and thus results of Cr(VI) represent status of the sample at the time of testing.
5. # = Positive indicates the presence of CrVI on the tested areas;
   Negative indicates the absence of CrVI on the tested areas.
6. "-" = Not regulated

SGS

Test Report No. CANEC0905333602 Date: 31 Oct 2009 Page 3 of 4

ATTACHMENTS

Testing Flow Chart

1) Name of the person who made measurement: Luke Xu / Lily Lee
2) Name of the person in charge of measurement: Adams Yu / Leo Wang
3) These samples were dissolved totally by pre-conditioning method according to below flow chart (Cr^{6+} test method excluded)

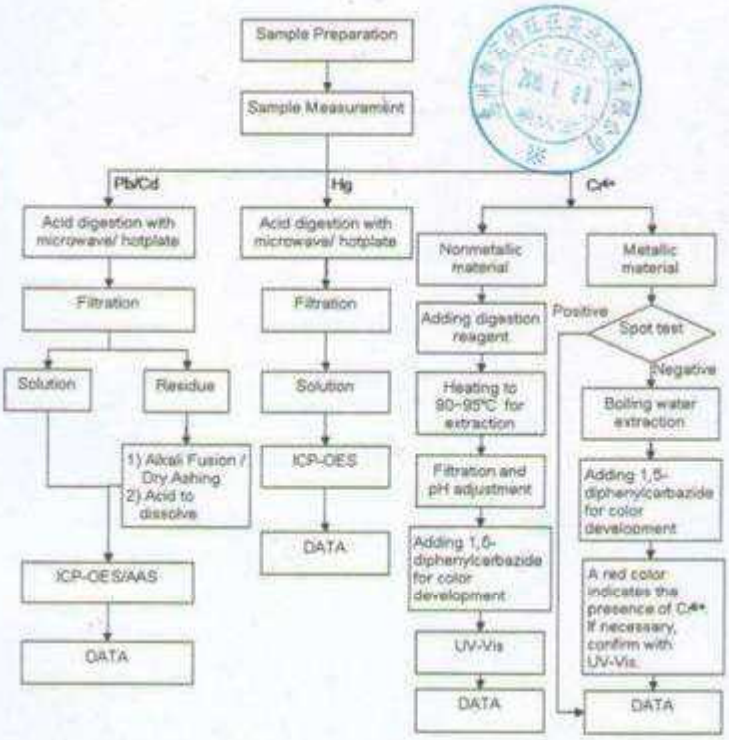

SGS

Test Report No. CANEC0905333602 Date: 31 Oct 2009 Page 4 of 4

Sample photo:

SGS authenticate the photo on original report only

*** End of Report ***

SGS

Test Report No. CANEC0901929901 Date: 20 Apr 2009 Page 1 of 4

HUIZHOU FUDIWANGWANG INDUSTRY DEVELOPMENT CO.,LTD.
HUITAI INDUSTRIAL PARK,ZHONGKAI HIGH-TECH DEVELOPMENT ZONE HUIZHOU CITY
CHINA

The following sample(s) was/were submitted and identified on behalf of the clients as :
环保镜

SGS Job No.	:	11759176 - SZ
Date of Sample Received	:	15 Apr 2009
Testing Period	:	15 Apr 2009 - 20 Apr 2009
Test Requested	:	Selected test(s) as requested by client.
Test Method	:	Please refer to next page(s).
Test Results	:	Please refer to next page(s).
Conclusion	:	Based on the performed tests on submitted sample(s), the results comply with the RoHS Directive 2002/95/EC and its subsequent amendments.

2009. 3. 16

Signed for and on behalf of
SGS-CSTC Ltd.

Huang Fang, Sunny
Sr. Engineer

This document is issued by the Company subject to its General Conditions of Service printed overleaf, available on request or accessible at http://www.sgs.com/terms_and_conditions.htm. Attention is drawn to the limitation of liability, indemnification and jurisdiction issues defined therein. Any holder of this document is advised that information contained hereon reflects the Company's findings at the time of its intervention only and within the limits of Client's instructions, if any. The Company's sole responsibility is to its Client and this document does not exclude the parties to a transaction from exercising all their rights and obligations under the transaction documents. Any unauthorized alteration, forgery or falsification of the content or appearance of this document is unlawful and offenders may be prosecuted to the fullest extent of the law. Unless otherwise stated the results shown in this document refer only to the sample(s) tested. This document cannot be reproduced except in full, without prior written approval of the Company.

SGS
Member of the SGS Group (SGS SA)

SGS

Test Report No. CANEC0901929901 Date: 20 Apr 2009 Page 2 of 4

Test Results:

ID for specimen 1 : CAN09-019299.001
Description for specimen 1 : Silver-gray plated metal

RoHS Directive 2002/95/EC

Test Item(s)	Unit	Test Method (Reference)	Result	MDL	Limit
Cadmium (Cd)	mg/kg	IEC 62321:2008, ICP-OES	N.D.	2	100
Lead (Pb)	mg/kg	IEC 62321:2008, ICP-OES	N.D.	2	1000
Mercury (Hg)	mg/kg	IEC 62321:2008, ICP-OES	N.D.	2	1000
Hexavalent Chromium (CrVI) by boiling water extraction	-	IEC 62321:2008, UV-Vis	Negative	◇	#

Note:
1. mg/kg = ppm
2. N.D. = Not Detected (< MDL)
3. MDL = Method Detection Limit
4. ◇ = Spot-Test:
   Negative = Absence of CrVI coating, Positive = Presence of CrVI coating;
   (The tested sample should be further verified by boiling-water-extraction method if the spot test result is negative or cannot be confirmed.)
   Boiling-water-extraction:
   Negative = Absence of CrVI coating
   Positive = Presence of CrVI coating; the detected concentration in boiling-water-extraction solution is equal or greater than 0.02 mg/kg with 50 cm² sample surface area.
   Storage conditions and production date of the tested sample are unavailable and thus results of Cr(VI) represent status of the sample at the time of testing.
5. # = Positive indicates the presence of CrVI on the tested areas.
   Negative indicates the absence of CrVI on the tested areas.
6. "-" = Not regulated

2009. 3. 16

This document is issued by the Company subject to its General Conditions of Service printed overleaf, available on request or accessible at www.sgs.com/terms_and_conditions.htm and, for electronic format documents, subject to Terms and Conditions for Electronic Documents at www.sgs.com/terms_e-document.htm. Attention is drawn to the limitation of liability, indemnification and jurisdiction issues defined therein. Any holder of this document is advised that information contained hereon reflects the Company's findings at the time of its intervention only and within the limits of Client's instructions, if any. The Company's sole responsibility is to its Client and this document does not exclude the parties to a transaction from exercising all their rights and obligations under the transaction documents. Any unauthorized alteration, forgery or falsification of the content or appearance of this document is unlawful and offenders may be prosecuted to the fullest extent of the law. Unless otherwise agreed in writing, this document pertains to the sample(s) tested, this document cannot be reproduced except in full, without prior approval of the Company.

SGS
Member of the SGS Group (SGS SA)

SGS

Test Report No. CANEC0901929901 Date: 20 Apr 2009 Page 3 of 4

ATTACHMENTS

Testing Flow Chart

1) Name of the person who made measurement: Luke Xu / Lily Lee
2) Name of the person in charge of measurement: Adams Yu / Leo Wang

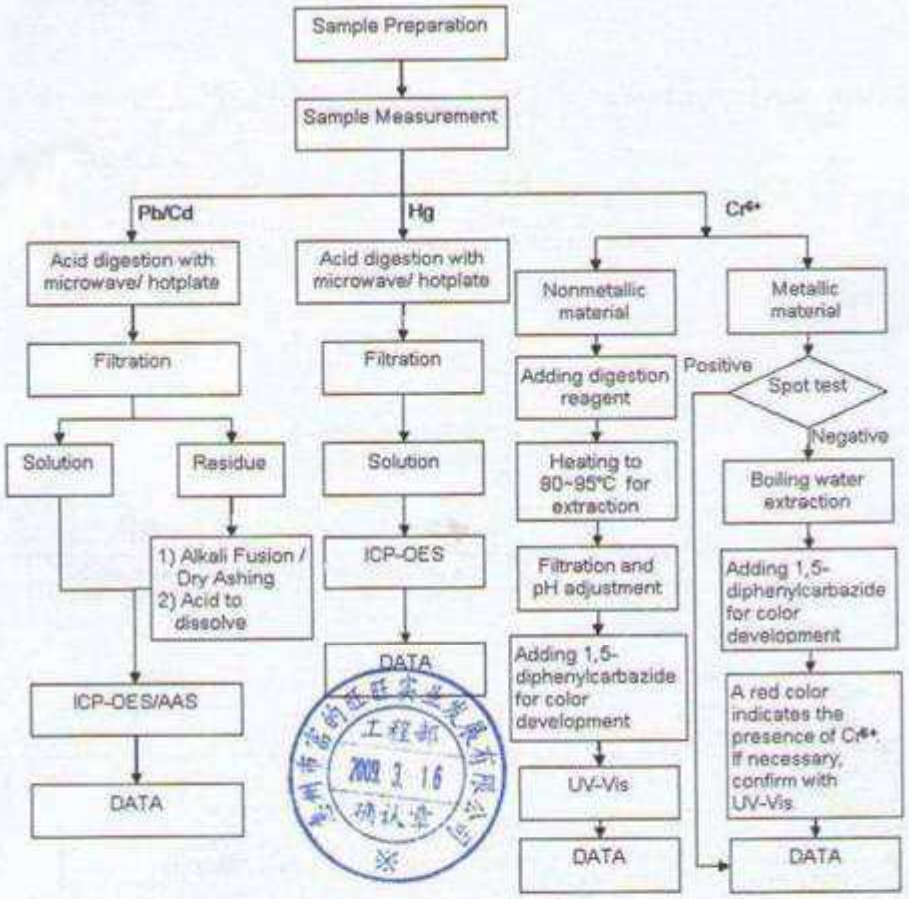

Member of the SGS Group (SGS SA)

SGS

Test Report No. CANEC0901929901 Date: 20 Apr 2009 Page 4 of 4

Sample photo:

SGS authenticate the photo on original report only

*** End of Report ***

This document is issued by the Company under its General Conditions of Service printed overleaf or available on request and accessible at [illegible] to the limitation of liability, indemnification and jurisdiction issues defined therein. Any holder of this document is advised that information contained hereon reflects the Company's findings at the time of its intervention only and within the limits of Client's instructions, if any. The Company's sole responsibility is to its Client and this document does not exonerate parties to a transaction from exercising all their rights and obligations under the transaction documents. Any unauthorized alteration, forgery or falsification of the content or appearance of this document is unlawful and offenders may be prosecuted to the fullest extent of the law. Unless otherwise stated the results shown in this test report refer only to the sample(s) tested. This document cannot be reproduced except in full, without prior approval of the Company.

SGS

19 Aichu Road, Science Park Guangzhou Science & Technology Development District Guangzhou, China 510663 t (86-20)82155555 f (86-20)82075113 www.cn.sgs.com
中国·广州·经济技术开发区科学城爱辉路19号 邮编 510663 t (86-20)82155555 f (86-20)82075113 e sgs.china@sgs.com

Member of the SGS Group (SGS SA)

ADVANTECH Your ePlatform Partner

Advantech Co., Ltd.
No.1, Alley 20, Lane 26, Rueiguang Road,
Neihu District, Taipei, Taiwan 114, R.O.C.
Tel: 886-2-2792-7818 Fax: 886-2-2794-7305

限用物質不使用聲明書

本公司（包括協力廠商）特此保證：

提供給貴公司，貴公司之子公司或協力廠商的所有產品或零組件中，絕不包含以下所列物質。如果有違背此聲明，本公司將會負責賠償貴公司的損失。

【符合RoHS 2002/95/EC 指令所規定的六項禁用物質】

【符合EU 2006/122/EC 指令所規定的PFOS禁用物質】

【符合以下勾選之研華客戶規範所規定的禁用物質】

☐IBM 46C3484, Rev002 負責人：_____(印)

☐NOKIA 6-145584, Version10.0 負責人：_____(印)

☐Nokia Siemens Networks Substance List. Version1.0
負責人：_____(印)

☐ SONY SS00259 for General Use, Seventh Edition
負責人：_____(印)

公司名稱：訊凱國際股份有限公司

負 責 人：林仁璋 (印)

聲 明 日 期：97 年 6 月 30 日